chanhvinh.com

DB SUBMINIATURE SWITCH

DB subminiature switch

Precision subminiature switch with high repeat accuracy, available up to an operating temperature of 120°C

- Nominal current up to 10 A at 250 VAC
- A wide variety of auxiliary actuators available
- Actuators can also be retrofitted, two mounting points
- High contact stability due to specific contact materials
- Mechanical life up to 15 × 10^6 actuations
- Wide variety of terminal types



Technical specifications

Series	**DB ❶**
Contact configuration	S.P.D.T., S.P.S.T. - N.O., S.P.S.T. - N.C.
Contact gap	<3 mm (µ)
Switching voltage	250 VAC
Switching current	0.1 to 10 A AC, depending on model (see table on page 19)
Operating voltage	70 to 280 cN without auxiliary actuator, depending on model
Total travel	1.6 mm
Mechanical life	see table on page 18
Electrical life	see table on page 18
Ambient temperature	−40 to +85°C/120°C
Proof tracking index	PTI 175 (PTI 250 on request)

Materials

Base	PET (UL 94V-0)
Cover	PBT (UL 94V-0); PET (UL 94V-0)
Actuator	PBT (UL 94V-0) T120 POM (UL 94 HB) T85
Contacts	$AgSnO_2$, AgNi, AuAgPt (Crosspoint)
Terminals	CuZn silver-plated
Auxiliary actuator	Stainless steel or plastic
Approvals	depending on model
Degree of protection Switch interior	IP50

Circuitry ❸

Operating temperature +85°C	**Code**
S.P.S.T. - N.O.	E
S.P.S.T. - N.C.	F
S.P.D.T.	G
Operating temperature +120°C	**Code**
S.P.S.T. - N.O.	A
S.P.S.T. - N.C.	B
S.P.D.T.	C

Generation of order code (example)
The order code consists of 5 parameters:

❶	❷	❸	❹	❺
Series	Electrical rating	Circuitry	Terminal type	Auxiliary actuator
DB = subminiature switch	1 = 6 A, 250 VAC	C = S.P.D.T.	A1 = Solder terminal short	LB = Lever straight, RM rear 4.8

- Not every configurable variant is available for order. Please contact us.
- The final two digits of article numbers on commercial documents refer to the index of the respective drawing.
- Customer-specific models are marked with a G or W as the sixth digit of the article number.

Terminals

Q.C. terminal 2.8 x 0.5 mm

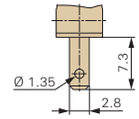

Solder terminal, short

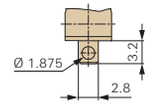

PCB terminal, straight 1.3 x 0.5 mm

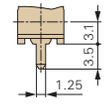

PCB terminal, straight 0.6 x 0.5 mm

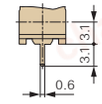

Side definition with terminals and location pins

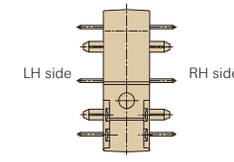

PCB terminal 0.6 x 0.5 mm RH side w/o location pins

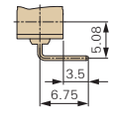

PCB terminal 0.6 x 0.5 mm LH side w/o location pins

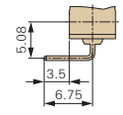

PCB terminal 0.6 x 0.5 mm RH side with location pins

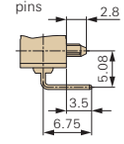

PCB terminal 0.6 x 0.5 mm LH side with location pins

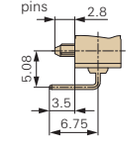

Steel auxiliary actuator

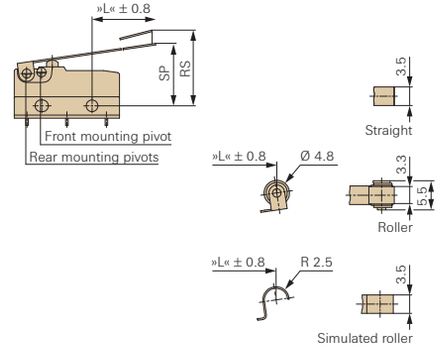

Auxiliary plastic actuator with/without adjusting screw

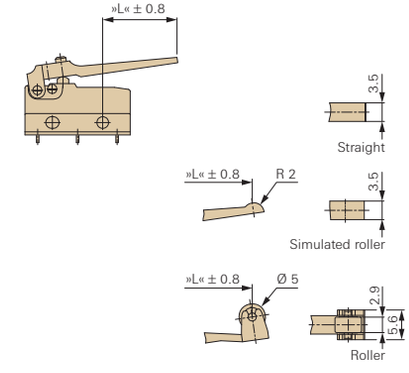

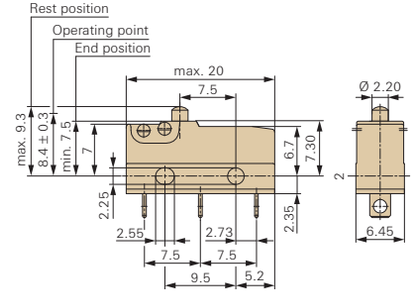

Drilling patterns

Drilling pattern for PCB terminal 1.3 x 0.5 mm

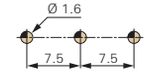

Drilling pattern for PCB terminal 0.6 x 0.5 mm straight/lateral

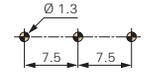

Drilling pattern for PCB terminal 0.6 x 0.5 mm lateral with location pins

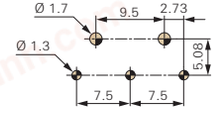

Dimensions in mm

chanhvinh.com

DB SUBMINIATURE SWITCH CONTINUED

Electrical rating and operating life ❷

Electrical rating according to		Electrical life (operations)		Mechanical life	Operating force	Housing mark	Code
EN 61058-1	UL 1054	acc. to EN	acc. to UL		max. (cN)		
6 A 250 VAC	5 A 125–250 VAC	10,000	6,000	15 x 10^6	150	DB 1	1
10 (1.5) A, 250 VAC	10.1 A, 125–250 AC, 1/4 HP, 125 VAC	10,000	6,000	10 x 10^6	250	DB 2	2
0.1 A, 250 VAC	0.1 A 125–250 VAC	50,000	100,000	15 x 10^6	150	DB 3	3
4 A, 250 VAC	4 A, 125–250 VAC	50,000	6,000	15 x 10^6	90	DB 4	4
1 A, 250 VAC	1 A, 125–250 VAC	50,000	6,000	15 x 10^6	70	DB 5*	5*
10 (3) A, 250 VAC	10.1 A, 125–250 VAC, 1/4 HP, 125 VAC	10,000	6,000	10 x 10^6	280	DB L	L
6 (2) A, 250 VAC	5 A, 125–250 VAC	50,000	6,000	15 x 10^6	150	DB O	O

Special versions with lower ratings upon request

* Only T85

Switching parameters

Model	Type	Max. operating force (cN)	Max. pretravel (mm)	Min. overtravel (mm)	Differential travel max. (mm)	Max. rest position (mm)	Operating point (mm)	Length actuator (mm) ± 0.8
Spherical-head actuator or actuator with radius, without auxiliary actuator	DB5	70	1.0	0.6	0.1	9.3	8.4 ± 0.3	–
	DB1/O/3	150	1.0	0.6	0.1	9.3	8.4 ± 0.3	–
	DBL	280	1.0	0.6	0.15	9.3	8.4 ± 0.3	–
	DB2	250	1.0	0.6	0.1	9.3	8.4 ± 0.3	–
	DB4	90	1.0	0.6	0.1	9.3	8.4 ± 0.3	–

Terminal type ❹

Terminal type	Code
Q.C. terminal 2.8 x 0.5 mm, straight	B1
Solder terminal short	A1
PCB terminal 1.3 x 0.5 mm, straight	C1
PCB terminal 0.6 x 0.5 mm, straight	D1
PCB terminal 0.6 x 0.5 mm, RH side*	D2
PCB terminal 0.6 x 0.5 mm, LH side*	D3
PCB terminal 0.6 x 0.5 mm, RH side**	D4
PCB terminal 0.6 x 0.5 mm, LH side**	D5

* With location pins
** Without location pins

Electrical rating at DC voltage

Please see our technical specification for DC currents (TS-0002) which is available upon request.

Auxiliary actuator ❺

Model	Mounting point	Length	Order code*	Code
Without lever, spherical head	–	–	–	AA
Without lever, radius shape	–	–	–	BA
Straight	RM rear	4.8	614-01232	LB
		7	614-01233	LC
		42	614-01234	LD
	FM front	7	614-01232	MB
		9.4	614-01233	MC
		43.5	614-01234	MD
Roller	RM rear	2.5	714-00260	RB
		4.7	714-00261	RC
		39.7	714-00262	RD
	FM front	4.7	714-00260	TB
		7.1	714-00261	TC
		41.2	714-00262	TD
Simulated roller	RM rear	2.5	614-01237	SB
		4.7	614-01238	SC
		39.7	614-01239	SD
	FM front	4.7	614-01237	UB
		7.1	614-01238	UC
		41.2	614-01239	UD
Plastic, straight	RM rear	7	614-01247	WB
		14	614-01253	WC
	FM front	9.4	614-01247	GB
		16.2	614-01253	GC
Plastic roller	RM rear	5.2	714-00299	ZB
	FM front	7.3	714-00299	OB
Plastic simulated roller	RM rear	5.6	614-01249	VB
	FM front	7.9	614-01249	HB

* For retrofitting



For detailed information please note the technical specifications which you can find in the download section of our website **www.switches-sensors.zf.com**.