chanhvinh.com

Innovative Service Around the Globe YAGEO

DATA SHEET

ELECTROSTATIC DISCHARGE PROTECTION DEVICES

INDUSTRIAL / CONSUMER

SET23AXXL02 SERIES

RoHS compliant & Halogen free





Product specification– June 30, 2023 V.2

chanhvinh.com

Electrostatic Discharged Protection Devices (ESD) Data Sheet

Description

Brightking's SET23AXXL02 series are designed to protect components which are connected to data and transmission lines from voltage surges caused by electrostatic discharge (ESD), electrical fast transients (EFT) and lightning. TVS diodes are characterized by their high surge capability, low operating and clamping voltages, and fast response time. This makes them ideal for use as board level protection of sensitive semiconductor components. The low profile SOT-23 package allows flexibility in the design of crowded circuit boards.



Contact : ±30kV
Air : ±30kV



Features

- IEC61000-4-2 ESD 30KV Air, 30KV contact compliance
  ESD 15KV Air, 8KV contact compliance for SET23A36L02
- SOT-23 surface mount package
- Protects one bidirectional line or two unidirectional lines
- Working voltage: 3.3V, 5V, 12V, 15V, 24V and 36V
- Low leakage current
- Low operating and clamping voltages
- Solid-state silicon avalanche technology
- Lead Free/RoHS compliant
- Solder reflow temperature: Pure Tin-Sn, 260~270℃
- Flammability rating UL 94V-0
- Meets MSL level 1, per J-STD-020

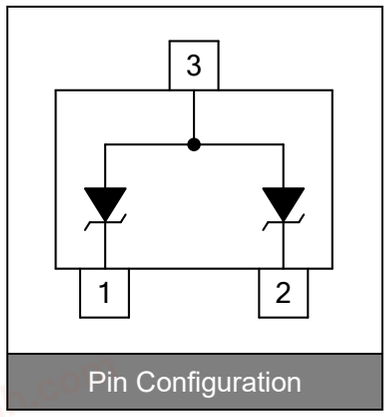

Pin Configuration

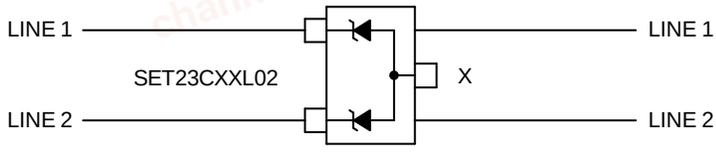

Bidirectional Protect Line

Applications

- Cellular handsets and accessories
- Personal digital assistants (PDA's)
- Portable instrumentation
- Set Top Box (STB)
- Servers, notebook, and desktop PC
- Wireless bus protection
- RS-232, RS-422, RS-423 protection

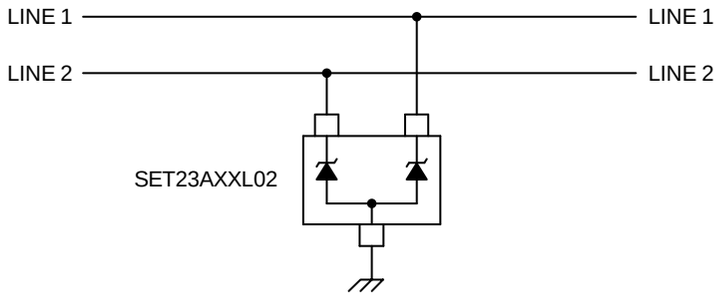

Unidirectional Protect Lines

Maximum Ratings

Rating	Symbol	Value	Unit
ESD voltage (Contact discharge)	V_{ESD}	±8	kV
ESD voltage (Air discharge)		±15	
Storage & operating temperature range	T_{STG} ,T_J	-55~+150	℃

chanhvinh.com

Electrical Characteristics (T_J=25℃)

SET23A03L02 (Marking: B 03C)

Parameter	Symbol	Condition	Min.	Typ.	Max.	Unit
Reverse stand-off voltage	V_{RWM}				3.3	V
Reverse breakdown voltage	V_{BR}	I_{BR}=1mA	4			V
Reverse leakage current	I_R	V_R=3.3V each I/O pin			20	μA
Clamping voltage (tp=8/20μs)	V_C	I_{PP}=1A			7	V
Clamping voltage (tp=8/20μs)	V_C	I_{PP}=15A			15	V
Peak Pulse Current(tp=8/20μs)	I_{PP}				15	A
Off state junction capacitance	C_J	0Vdc,f=1MHz Between I/O pins and GND		300		pF

SET23A05L02 (Marking: B 05C)

Parameter	Symbol	Condition	Min.	Typ.	Max.	Unit
Reverse stand-off voltage	V_{RWM}				5	V
Reverse breakdown voltage	V_{BR}	I_{BR}=1mA	6			V
Reverse leakage current	I_R	V_R=5V each I/O pin			5	μA
Clamping voltage (tp=8/20μs)	V_C	I_{PP}=1A			9.8	V
Clamping voltage (tp=8/20μs)	V_C	I_{PP}=15A			20	V
Peak Pulse Current(tp=8/20μs)	I_{PP}				15	A
Off state junction capacitance	C_J	0Vdc,f=1MHz Between I/O pins and GND		220		pF

SET23A12L02-E18 (Marking: B 12C)

Parameter	Symbol	Condition	Min.	Typ.	Max.	Unit
Reverse stand-off voltage	V_{RWM}				12	V
Reverse breakdown voltage	V_{BR}	I_{BR}=1mA	13.3			V
Reverse leakage current	I_R	V_R=12V Each I/O pin			1	μA
Clamping voltage (tp=8/20μs)	V_C	I_{PP}=1A			19	V
Clamping voltage (tp=8/20μs)	V_C	I_{PP}=10A			27	V
Peak Pulse Current(tp=8/20μs)	I_{PP}				18	A
Off state junction capacitance	C_J	0Vdc,f=1MHz Between I/O pins and GND		100		pF

chanhvinh.com

Electrical Characteristics (T_J=25℃)

SET23A15L02 (Marking: B 15C)

Parameter	Symbol	Condition	Min.	Typ.	Max.	Unit
Reverse stand-off voltage	V_{RWM}				15	V
Reverse breakdown voltage	V_{BR}	I_{BR}=1mA	16.7			V
Reverse leakage current	I_R	V_R=15V each I/O pin			1	μA
Clamping voltage (tp=8/20μs)	V_C	I_{PP}=1A			24	V
Clamping voltage (tp=8/20μs)	V_C	I_{PP}=10A			30	V
Peak Pulse Current(tp=8/20μs)	I_{PP}				10	A
Off state junction capacitance	C_J	0Vdc,f=1MHz Between I/O pins and GND		90		pF

SET23A24L02 (Marking: B 24C)

Parameter	Symbol	Condition	Min.	Typ.	Max.	Unit
Reverse stand-off voltage	V_{RWM}				24	V
Reverse breakdown voltage	V_{BR}	I_{BR}=1mA	26.7			V
Reverse leakage current	I_R	V_R=24V each I/O pin			1	μA
Clamping voltage (tp=8/20μs)	V_C	I_{PP}=1A			43	V
Clamping voltage (tp=8/20μs)	V_C	I_{PP}=5A			49	V
Peak Pulse Current(tp=8/20μs)	I_{PP}				6	A
Off state junction capacitance	C_J	0Vdc,f=1MHz Between I/O pins and GND		80		pF

SET23A36L02 (Marking: B 36C)

Parameter	Symbol	Condition	Min.	Typ.	Max.	Unit
Reverse stand-off voltage	V_{RWM}				36	V
Reverse breakdown voltage	V_{BR}	I_{BR}=1mA	40			V
Reverse leakage current	I_R	V_R=36V each I/O pin			1	μA
Clamping voltage (tp=8/20μs)	V_C	I_{PP}=1A			51	V
Clamping voltage (tp=8/20μs)	V_C	I_{PP}=5A			76.8	V
Peak Pulse Current(tp=8/20μs)	I_{PP}				5	A
Off state junction capacitance	C_J	0Vdc,f=1MHz Between I/O pins and GND		70		pF

chanhvinh.com

Typical Characteristics Curves

Figure 1. Power Derating Curve

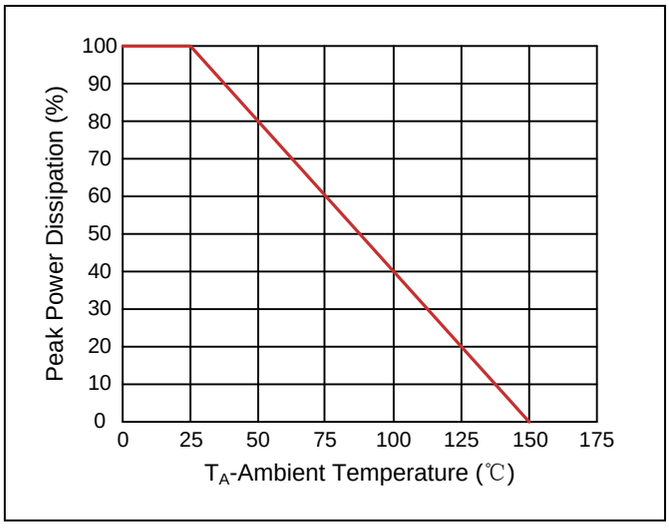

Figure 2. Pulse Waveforms

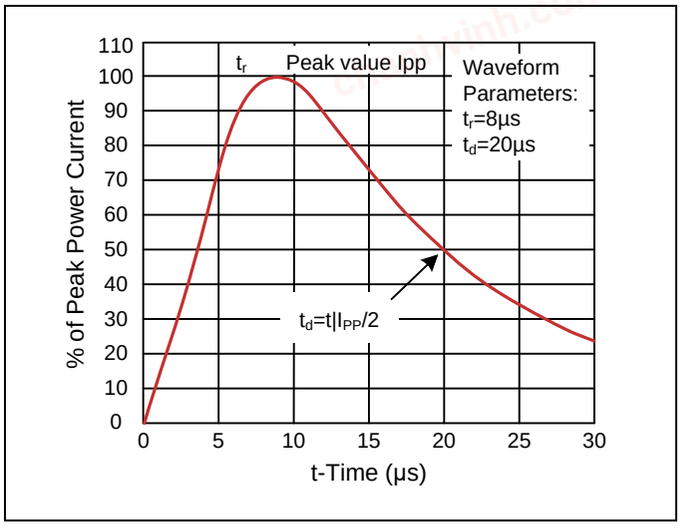

Figure 3. Forward Voltage vs. Forward Current

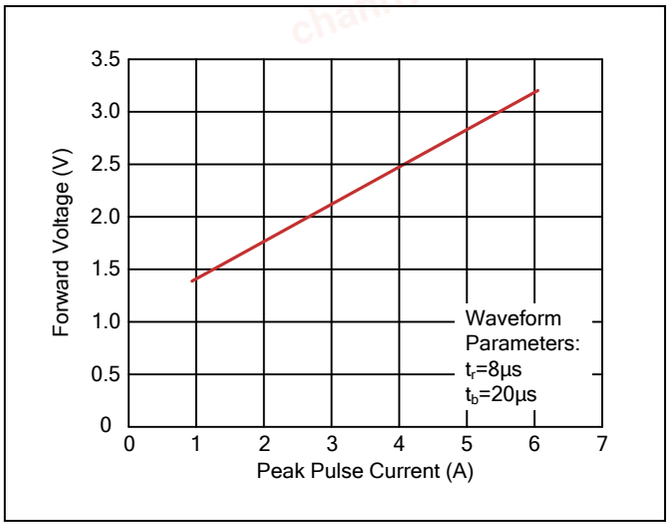

Figure 4. ESD Clamping(8kV Contact IEC61000-4-2)

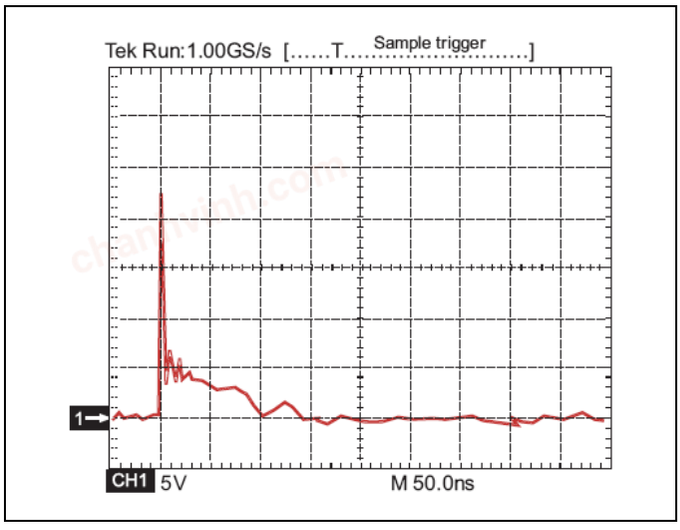

chanhvinh.com

Recommended Soldering Conditions

Reflow Soldering

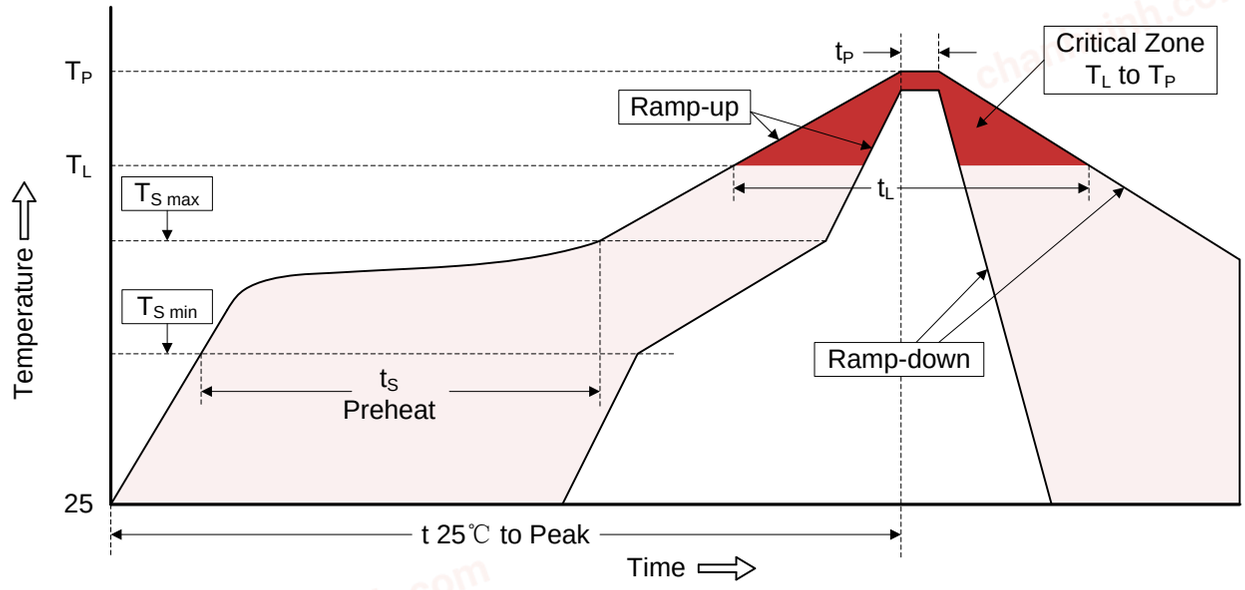

Recommended Conditions

Profile Feature	Pb-Free Assembly
Average ramp-up rate (T_L to T_P)	3℃/second max.
Preheat -Temperature Min ($T_{S\ min}$) -Temperature Max ($T_{S\ max}$) -Time (min to max) (ts)	150℃ 200℃ 60-180 seconds
$T_{S\ max}$ to T_L -Ramp-up Rate	3℃/second max.
Time maintained above: -Temperature (T_L) -Time (t_L)	217℃ 60-150 seconds
Peak Temperature (T_P)	260℃
Time within 5℃ of actual Peak Temperature (t_P)	20-40 seconds
Ramp-down Rate	6℃/second max.
Time 25℃ to Peak Temperature	8 minutes max.

chanhvinh.com

Dimensions (SOT-23)

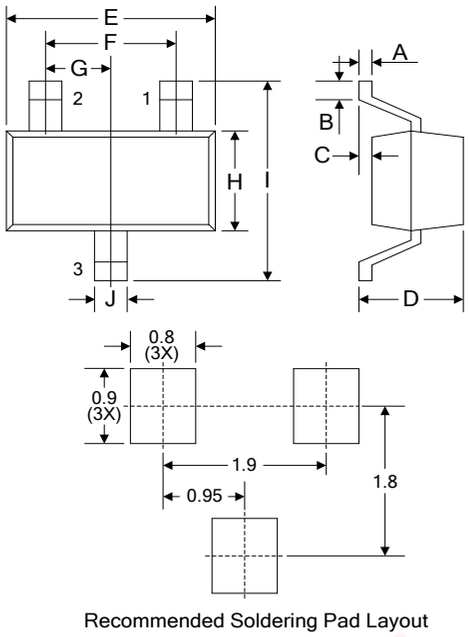

Recommended Soldering Pad Layout

Symbol	Dimension			
	Millimeters		Inches	
	Min.	Max.	Min.	Max.
A	0.08	0.18	0.003	0.007
B	0.15	-	0.006	-
C	-	0.13	-	0.005
D	0.89	1.09	0.035	0.043
E	2.80	3.05	0.110	0.120
F	1.90		0.075	
G	0.95		0.037	
H	1.19	1.40	0.047	0.055
I	2.10	2.49	0.083	0.098
J	0.35	0.50	0.014	0.020

Packaging

Tape

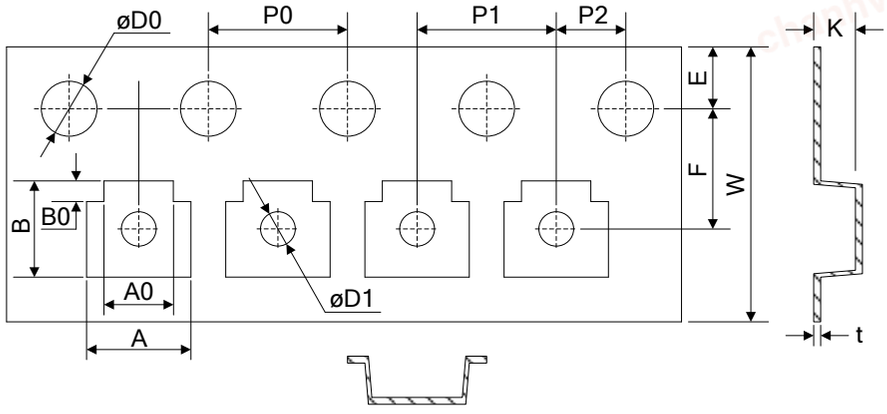

Symbol	Dimension (mm)
W	8.00±0.30
P0	4.00±0.10
P1	4.00±0.10
P2	2.00±0.10
D0	Φ1.55±0.10
D1	Φ1.00±0.05
E	1.75±0.10
F	3.50±0.10
A	3.10±0.10
A0	2.10±0.10
B	2.75±0.10
B0	0.65±0.10
K	1.10±0.10
t	0.20±0.05

Reel

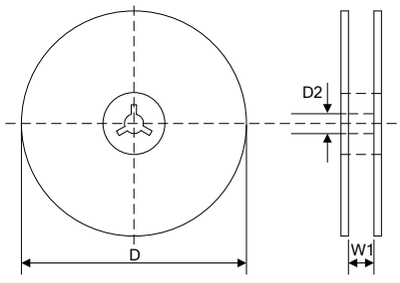

D	Φ178.0±2.0
D2	Φ13.0
W1	9.5
Quantity: 3000PCS	

chanhvinh.com

LEGAL DISCLAIMER

YAGEO, its distributors and agents (collectively, "YAGEO"), hereby disclaims any and all liabilities for any errors, inaccuracies or incompleteness contained in any product related information, including but not limited to product specifications, datasheets, pictures and/or graphics. YAGEO may make changes, modifications and/or improvements to product related information at any time and without notice.

YAGEO makes no representation, warranty, and/or guarantee about the fitness of its products for any particular purpose or the continuing production of any of its products. To the maximum extent permitted by law, YAGEO disclaims (i) any and all liability arising out of the application or use of any YAGEO product, (ii) any and all liability, including without limitation special, consequential or incidental damages, and (iii) any and all implied warranties, including warranties of fitness for a particular purpose, non -infringement and merchantability.

YAGEO products are designed for general purpose applications under normal operation and usage conditions. Please contact YAGEO for the applications listed below which require especially high reliability for the prevention of defects which might directly cause damage to the third party's life, body or property: Aerospace equipment (artificial satellite, rocket, etc.), Atomic energy-related equipment, Aviation equipment, Disaster prevention equipment, crime prevention equipment, Electric heating apparatus, burning equipment, Highly public information network equipment, data-processing equipment , Medical devices, Military equipment, Power generation control equipment, Safety equipment, Traffic signal equipment, Transportation equipment and Undersea equipment, or for any other application or use in which the failure of YAGEO products could result in personal injury or death, or serious property damage. Particularly **YAGEO Corporation and its affiliates do not recommend the use of commercial or automotive grade products for high reliability applications or manned space flight.**

Information provided here is intended to indicate product specifications only. YAGEO reserves all the rights for revising this content without further notification, as long as products are unchanged. Any product change will be announced by PCN.