chanhvinh.com

RC2512JK-072M2L

Aliases (RC2512JK072M2L)

YAGEO, RC, Thick Film, SMD Chip, 2.2 MOhms, 5%, 2512 / 6332

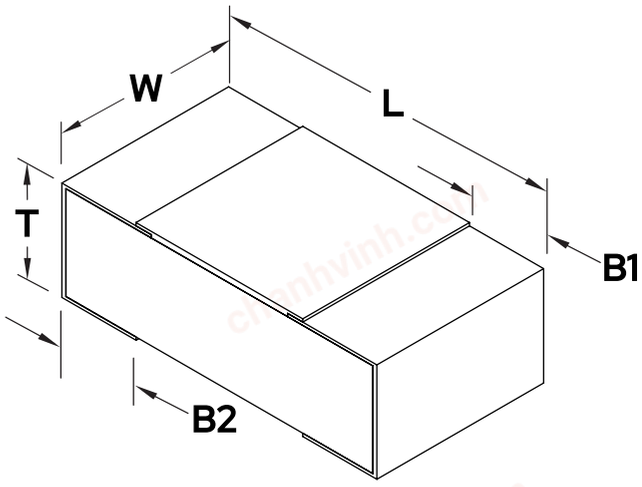

Click here for the 3D model.

General Information	
Supplier	YAGEO
Series	RC
Style	SMD Chip
Description	Standard Jumper Chip Resister
RoHS	Yes
Termination	Tin
Shelf Life	104 Weeks
Case Code (EIA / mm)	2512 / 6332

Dimensions	
L	6.35mm +/-0.1mm
W	3.1mm +/-0.15mm
T	0.55mm +/-0.1mm
B1	0.6mm +/-0.2mm
B2	0.6mm +/-0.2mm

Packaging Specifications	
Packaging	T&R, 178mm

Specifications	
Resistance	2.2 MOhms
Resistance Tolerance	5%
Power	1 W (70C)
Temp. Coefficient	-/+100 ppm/C
Temperature Range	-55/+155°C
Voltage DC	200 V (Max Continuous Voltage at Full Rated Power), 500 Max Over Voltage, 500 Dielectric Withstanding Voltage

Statements of suitability for certain applications are based on our knowledge of typical operating conditions for such applications, but are not intended to constitute - and we specifically disclaim - any warranty concerning suitability for a specific customer application or use. This Information is intended for use only by customers who have the requisite experience and capability to determine the correct products for their application. Any technical advice inferred from this Information or otherwise provided by us with reference to the use of our products is given gratis, and we assume no obligation or liability for the advice given or results obtained.

© 2006 - 2026 YAGEO