chanhvinh.com

# RC0603FR-07953RL

Aliases (RC0603FR07953RL)

YAGEO, RC, Thick Film, SMD Chip, 953 Ohms, 1%, 0603 / 1608

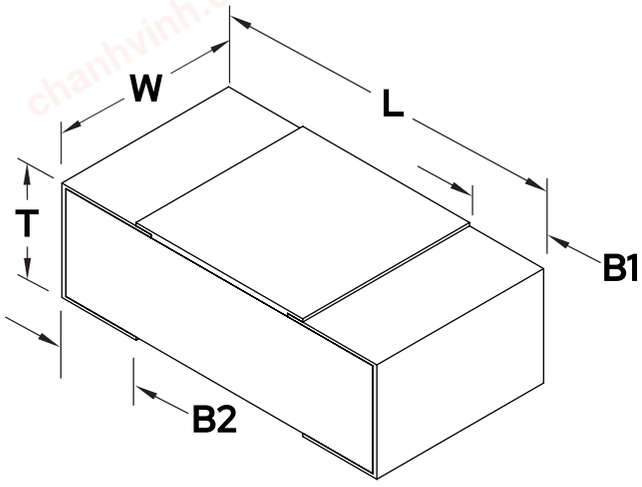


Click here for the 3D model.

| General Information | |
|---|---|
| Supplier | YAGEO |
| Series | RC |
| Style | SMD Chip |
| Description | Standard Thick Film Chip Resistors |
| RoHS | Yes |
| Termination | Tin |
| Shelf Life | 104 Weeks |
| Case Code (EIA / mm) | 0603 / 1608 |

| Dimensions | |
|---|---|
| L | 1.6mm +/-0.1mm |
| W | 0.8mm +/-0.1mm |
| T | 0.45mm +/-0.1mm |
| B1 | 0.25mm +/-0.15mm |
| B2 | 0.25mm +/-0.15mm |

| Packaging Specifications | |
|---|---|
| Packaging | T&R, 178mm |

| Specifications | |
|---|---|
| Resistance | 953 Ohms |
| Resistance Tolerance | 1% |
| Power | 0.1 W (70C) |
| Temp. Coefficient | -/+100 ppm/C |
| Temperature Range | -55/+155°C |
| Voltage DC | 75 V (Max Continuous Voltage at Full Rated Power), 150 Max Over Voltage, 150 Dielectric Withstanding Voltage |

Statements of suitability for certain applications are based on our knowledge of typical operating conditions for such applications, but are not intended to constitute - and we specifically disclaim - any warranty concerning suitability for a specific customer application or use. This Information is intended for use only by customers who have the requisite experience and capability to determine the correct products for their application. Any technical advice inferred from this Information or otherwise provided by us with reference to the use of our products is given gratis, and we assume no obligation or liability for the advice given or results obtained.



© 2006 - 2026 YAGEO