chanhvinh.com

RC0201JR-0722KL

Aliases (RC0201JR0722KL)

YAGEO, RC, Thick Film, SMD Chip, 22 kOhms, 5%, 0201 / 0603

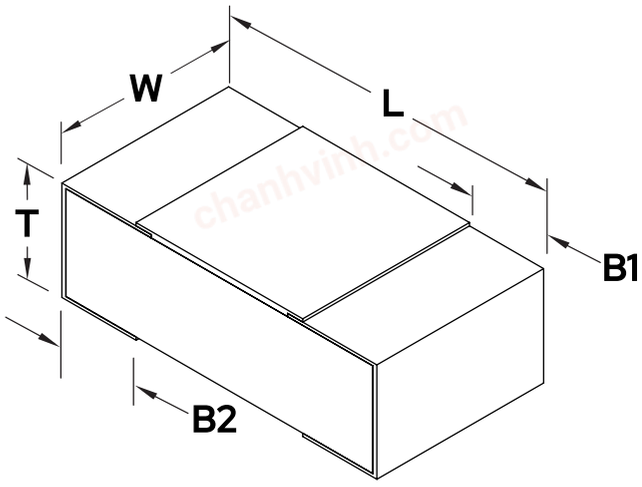

Click here for the 3D model.

General Information	
Supplier	YAGEO
Series	RC
Style	SMD Chip
Description	Standard Jumper Chip Resister
RoHS	Yes
Termination	Tin
Shelf Life	104 Weeks
Case Code (EIA / mm)	0201 / 0603

Dimensions	
L	0.6mm +/-0.03mm
W	0.3mm +/-0.03mm
T	0.23mm +/-0.03mm
B1	0.1mm +/-0.05mm
B2	0.15mm +/-0.05mm

Packaging Specifications	
Packaging	T&R, 178mm

Specifications	
Resistance	22 kOhms
Resistance Tolerance	5%
Power	0.05 W (70C)
Temp. Coefficient	-/+200 ppm/C
Temperature Range	-55/+125°C
Voltage DC	25 V (Max Continuous Voltage at Full Rated Power), 50 Max Over Voltage, 50 Dielectric Withstanding Voltage

Statements of suitability for certain applications are based on our knowledge of typical operating conditions for such applications, but are not intended to constitute - and we specifically disclaim - any warranty concerning suitability for a specific customer application or use. This Information is intended for use only by customers who have the requisite experience and capability to determine the correct products for their application. Any technical advice inferred from this Information or otherwise provided by us with reference to the use of our products is given gratis, and we assume no obligation or liability for the advice given or results obtained.

© 2006 - 2026 YAGEO