chanhvinh.com

Innovative Service Around the Globe YAGEO

DATA SHEET

AUTOMOTIVE GRADE CURRENT SENSOR - LOW TCR

4 Termination

PS series

5%, 1%, 0.5%

Sizes 0204/0306/0612/3637

RoHS compliant & Halogen free



YAGEO

Product specification – December 12, 2025 V.6

chanhvinh.com

SCOPE

This specification describes PS series 4-terminal current sensor - low TCR chip resistors made by metal alloy process.

APPLICATIONS

- Battery pack
- Inverter/Converter (DC-DC/AC-DC/DC-AC)
- Consumer electronics
- Laptops
- AI server

FEATURES

- Total lead free without RoHS exemption
- High component and equipment reliability
- Ultra low resistance and narrow tolerance suitable for current detection
- AEC-Q200 qualified
- Moisture sensitivity level: MSL 1
- Resistance against sulfur-containing atmosphere

ORDERING INFORMATION - GLOBAL PART NUMBER

Global part numbers are identified by the series, size, tolerance, packing type, temperature coefficient, taping reel and resistance value.

GLOBAL PART NUMBER

PS	XXXX	X	X	X	XX	XXXX	L
	(1)	(2)	(3)	(4)	(5)	(6)	(7)

(1) SIZE

0204/0306/0612/3637

(2) TOLERANCE

D = ±0.5%
F = ±1%
J = ±5%

(3) PACKAGING TYPE

K = Embossed taping reel
R = Paper taping reel

(4) TEMPERATURE COEFFICIENT OF RESISTANCE

E = ±50ppm/°C
M = ±75ppm/°C
F = ±100ppm/°C
L = ±150ppm/°C
G = ±200ppm/°C
P = ±300ppm/°C

(5) TAPING REEL

07 / 7W / 7T= 7 inch dia. Reel and specific rated power. Detailed power rating are shown in the Table 2.
13 = 13 inch dia. Reel and specific rated power. Detailed power rating are shown in the Table 2.

(6) RESISTANCE VALUE

0.5mΩ to 100mΩ
There are 3~5 digits indicated the resistance value. Letter R is decimal point.
Detailed coding rules of resistance are shown in the table of "Resistance rule of global part number".

(7) DEFAULT CODE

Letter L is the system default code for ordering only. (Note)

Resistance rule of global part number

Resistance code rule	Example
0RXXX	0R001 = 1mΩ
0RX	0R1 = 100mΩ
1UX	1U5 = 1.5mΩ
0UX	0U5 = 0.5mΩ

ORDERING EXAMPLE

The ordering code for a PS3637 3W chip resistor, value 0.001Ω with ±1% tolerance, supplied in 13-inch tape reel with 4Kpcs quantifies is: PS3637FKM130R001L.

NOTE

1. All our RSMD products are RoHS compliant. "LFP" of the internal 2D reel label mentions "Lead-Free Process"

chanhvinh.com

MARKING

PS0204



Fig. 1 Bar marking

PS0306/0612



Fig. 2 Bar marking

PS3637



Fig. 3 Bar marking

chanhvinh.com

Outlines

PS0204

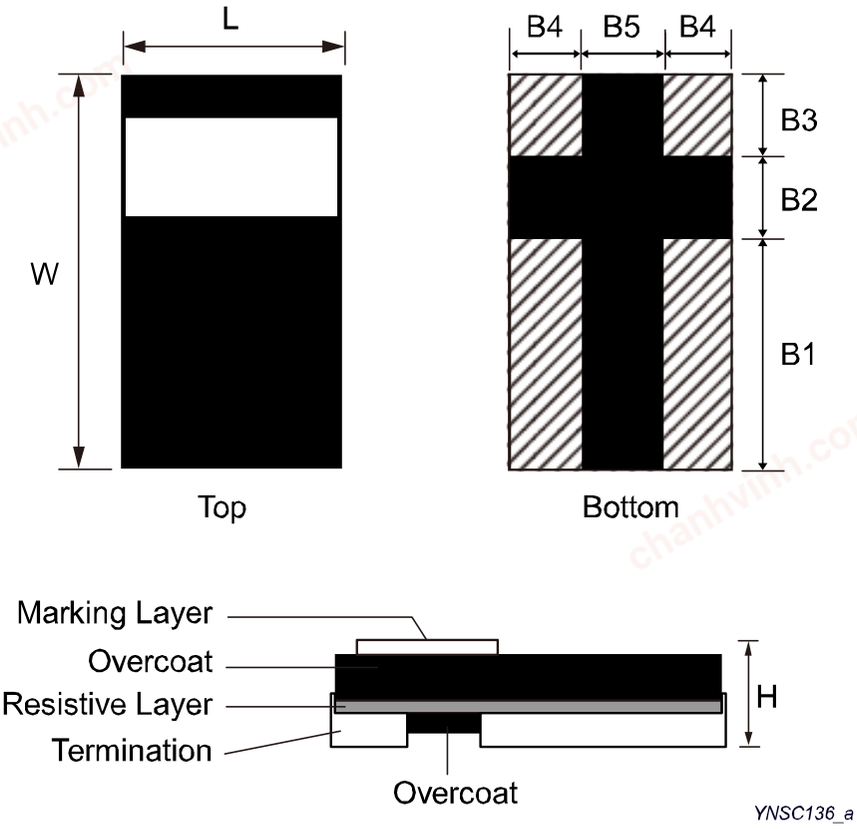

Fig. 4 Chip resistor outlines

DIMENSION

Table 1

TYPE	L (mm)	W (mm)	B1 (mm)	B2 (mm)	B3 (mm)	B4 (mm)	B5 (mm)	H (mm)
PS0204	0.55±0.10	1.00±0.10	0.6±0.10	0.20±0.10	0.20±0.10	0.15±0.06	0.25±0.06	Max. 0.40

Note:
1. For relevant physical dimensions, please refer to construction outlines.
2. Please contact with sales offices, distributors and representatives in your region before ordering.

chanhvinh.com

Outlines

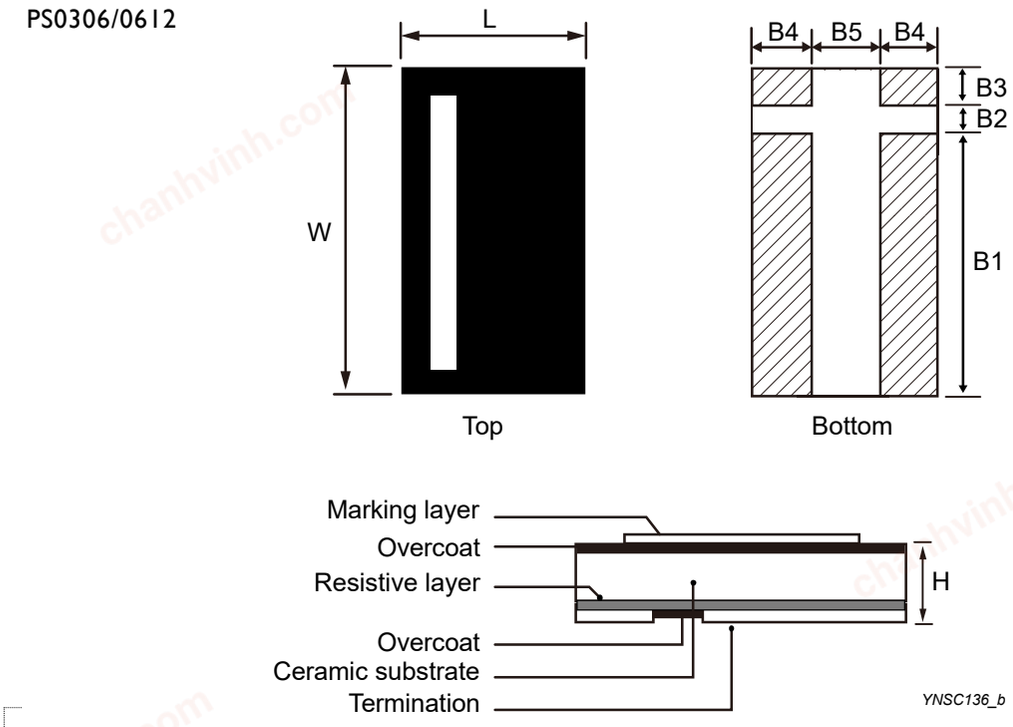

Fig. 5 Chip resistor outlines

DIMENSION

Table 2

TYPE	L (mm)	W (mm)	B1 (mm)	B2 (mm)	B3 (mm)	B4 (mm)	B5 (mm)	H (mm)
PS0306	0.80±0.15	1.60±0.20	1.10±0.20	0.25±0.10	0.25±0.10	0.20±0.10	0.40±0.20	(0.5~1mΩ) 0.70±0.15 (2~100mΩ) 0.50±0.20
PS0612	1.60+0.15/-0.20	3.20±0.20	2.20±0.20	0.50±0.20	0.50±0.20	0.45±0.20	0.70±0.20	(0.5~1mΩ) 0.70±0.20 (2~10mΩ) 0.60±0.20 (12~100mΩ) 0.50±0.20

Note:
1. For relevant physical dimensions, please refer to construction outlines.
2. Please contact with sales offices, distributors and representatives in your region before ordering.

chanhvinh.com

Outlines

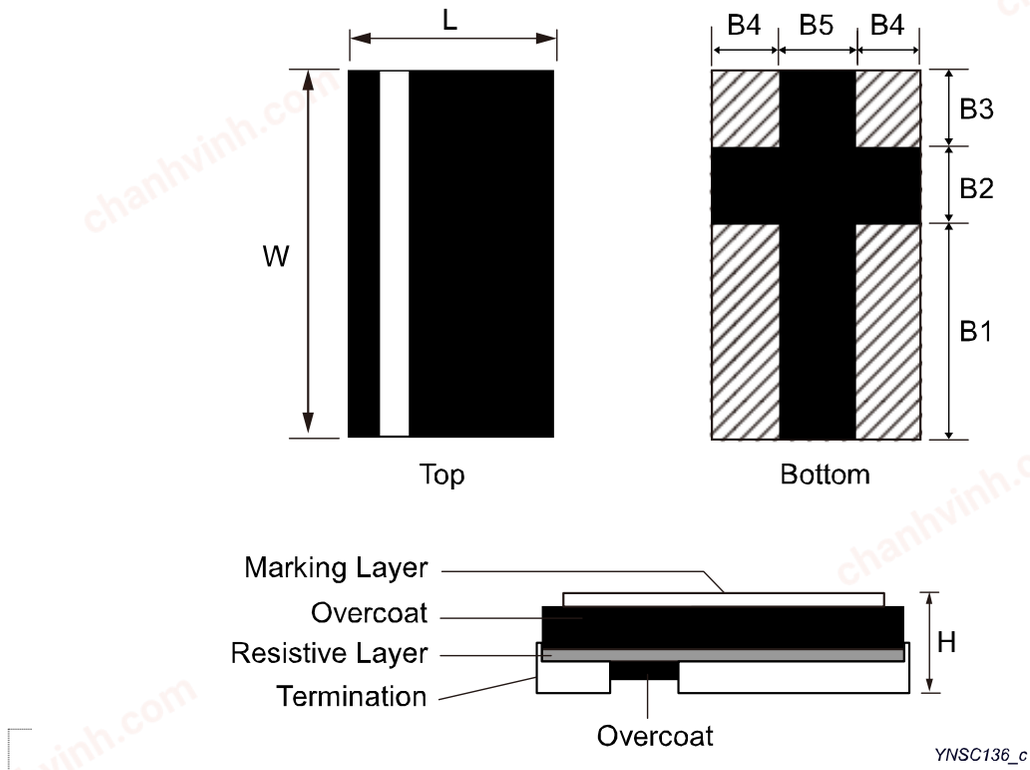

Fig. 6 Chip resistor outlines

DIMENSION

Table 3

TYPE		L (mm)	W (mm)	B1 (mm)	B2 (mm)	B3 (mm)	B4 (mm)	B5 (mm)	H (mm)
PS3637	1mΩ	9.14±0.254	9.40±0.254	7.037±0.254	0.813±0.254	1.55±0.254	3.51±0.254	2.12±0.254	0.635±0.254
	2~5 mΩ						2.18±0.254	4.78±0.254	

Note:
1. For relevant physical dimensions, please refer to construction outlines.
2. Please contact with sales offices, distributors and representatives in your region before ordering.

chanhvinh.com

ELECTRICAL CHARACTERISTICS

Table 4

SERIES	SIZE	POWER RATING(4)	TOLERANCE(2)	RESISTANCE RANGE	TEMPERATURE COEEFICIENT OF RESISTANCE(3)
PS	0204	1/4W(07) 1/3W(7W) 1/2W(7T)	±1%(F)	1.5mΩ ≤ R ≤ 5mΩ	±150ppm/°C(L)
		1/4W(07) 1/3W(7W)		5mΩ < R ≤ 10mΩ	±100ppm/°C(F)
	0306	1/4W(07) 1/3W(7W) 1/2W(7T)	±0.5%(D)(10, 20mΩ) ±1%(F) ±5%(J)	0.5mΩ ≤ R ≤ 1mΩ	±300ppm/°C(P)
				2mΩ ≤ R < 5mΩ	± 100ppm/°C(F) ± 150ppm/°C(L)
				5mΩ ≤ R ≤ 100mΩ	±75ppm/°C(M) ±100ppm/°C(F)
	0612	1W(07)	±0.5%(D)(2, 10, 20mΩ) ±1%(F) ±5%(J)	0.5mΩ	±150ppm/°C(L) ±300ppm/°C(P)
				1mΩ	±100ppm/°C(F) ±150ppm/°C(L)
				2mΩ ≤ R ≤ 9mΩ	±100ppm/°C(F)
				10mΩ ≤ R ≤ 13mΩ	±100ppm/°C(F) ±200ppm/°C(G)
				14 mΩ ≤ R ≤ 100mΩ	±100ppm/°C(F) ±200ppm/°C(G)
		3/2W(7W)	±1%(F) ±5%(J)	0.5mΩ	±300ppm/°C(P)
				1mΩ	±100ppm/°C(F) ±150ppm/°C(L)
				2mΩ ≤ R ≤ 5mΩ	±100ppm/°C(F)
	3637	3W(13)	±0.5%(D) ±1%(F)	1mΩ	±75ppm/°C(M)
				2mΩ ≤ R ≤ 5mΩ	±50ppm/°C(C) ±75ppm/°C(M)

Note: 1. Please contact with sales offices, distributors and representatives in your region before ordering.
2. Global part number (code 7)
3. Global part number (code 9)
4. Global part number (code 10-11)

chanhvinh.com

FUNCTIONAL DESCRIPTION

OPERATING TEMPERATURE RANGE

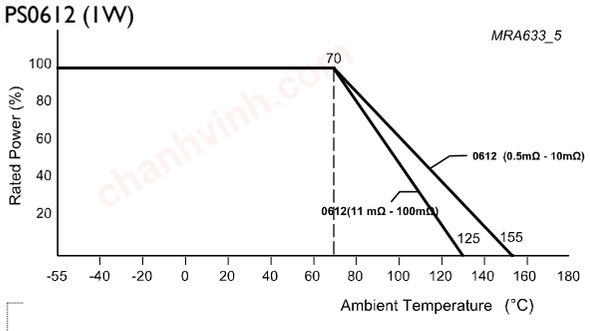

Fig. 7 Maximum dissipation (P_{max}) in percentage of rated power as a function of the operating ambient temperature (T_{amb})

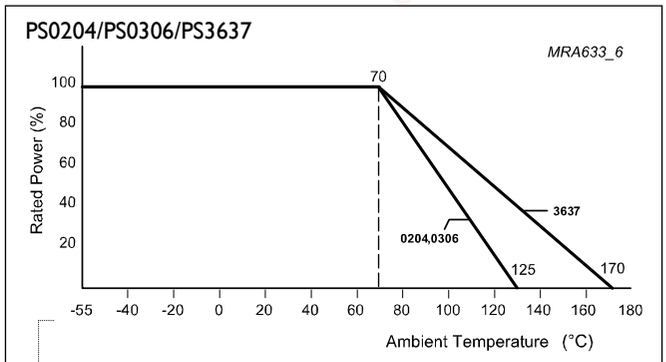

Fig. 8 Maximum dissipation (P_{max}) in percentage of rated power as a function of the operating ambient temperature (T_{amb})

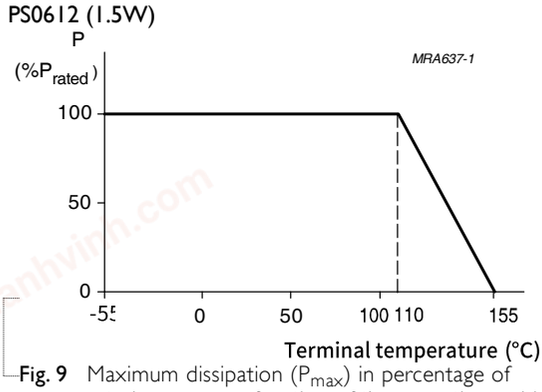

Fig. 9 Maximum dissipation (P_{max}) in percentage of rated power as a function of the operating ambient temperature (T_{amb})

RATED VOLTAGE

The DC or AC (rms) continuous working voltage corresponding to the rated power is determined by the following formula:

$$V = \sqrt{(P*R)}$$

Where

V = Continuous rated DC or AC (rms) working voltage (V)

P = Rated power (W)

R = Resistance value (Ω)

chanhvinh.com

PACKING STYLE AND PACKAGING QUANTITY

Table 5 Packing style and packaging quantity

PACKING STYLE	REEL DIMENSION	PS0204	PS0306	PS0612	PS3637
Paper taping reel (R)	7" (178 mm)	10,000	5,000	---	---
Embossed taping reel (K)	7" (178 mm)	---	---	4,000	---
	13" (330 mm)	---	---	---	4,000

PAPER TAPE

PS0204

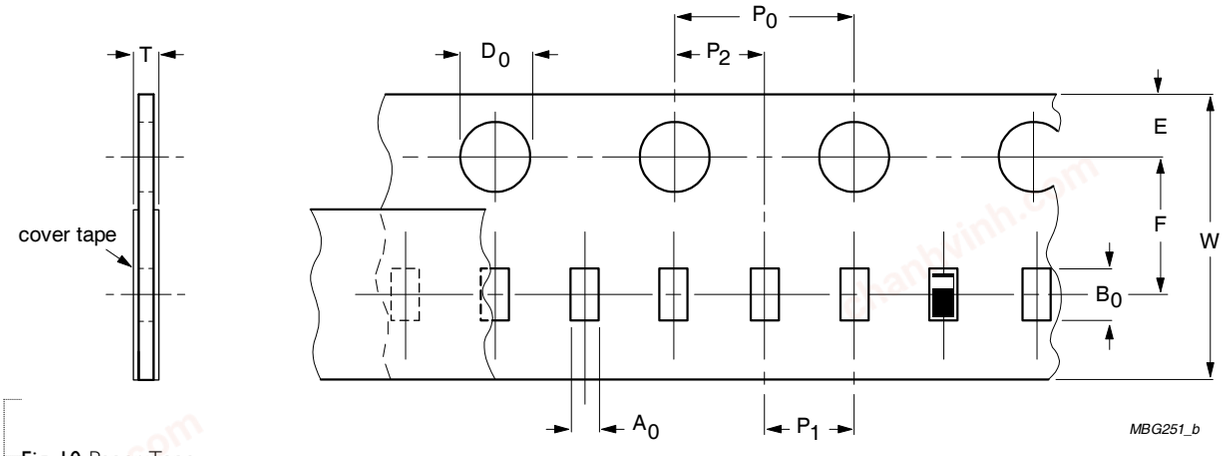

Fig. 10 Paper Tape

PS0306

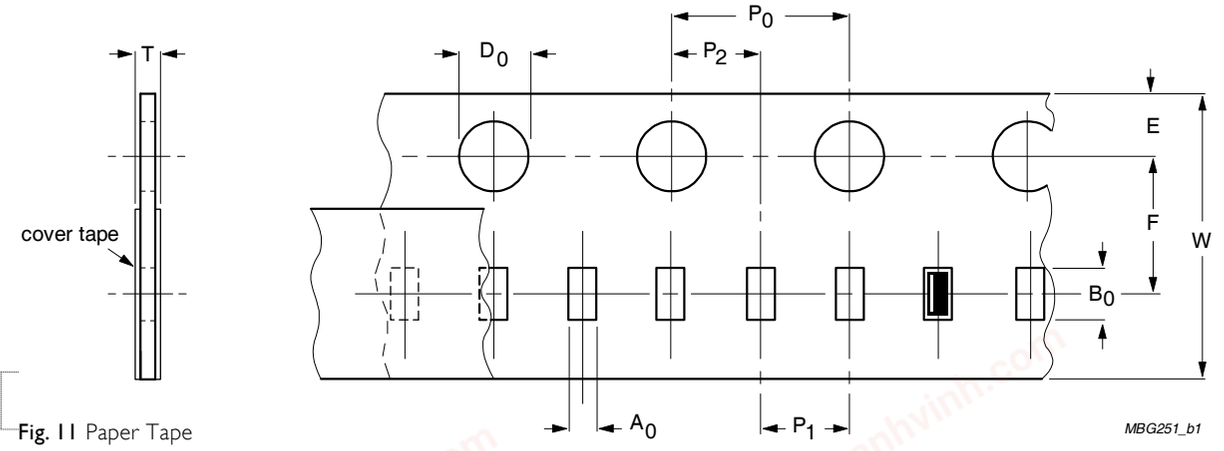

Fig. 11 Paper Tape

Table 6 Dimensions of paper tape for relevant chip resistors size

SIZE — SYMBOL — Unit: mm

	A_0	B_0	W	E	F	P_0	P_1	P_2	$\varnothing D_0$	T
PS0204	0.59±0.10	1.10±0.10	8.00±0.10	1.75±0.10	3.50±0.10	4.00±0.10	4.00±0.10	2.00±0.10	1.55±0.05	0.48±0.03
PS0306	1.10±0.15	1.90±0.15	8.00±0.30	1.75±0.10	3.50±0.10	4.00±0.10	4.00±0.10	2.00±0.10	1.50±0.10	0.80±0.10

chanhvinh.com

REEL SPECIFICATION

PS0612

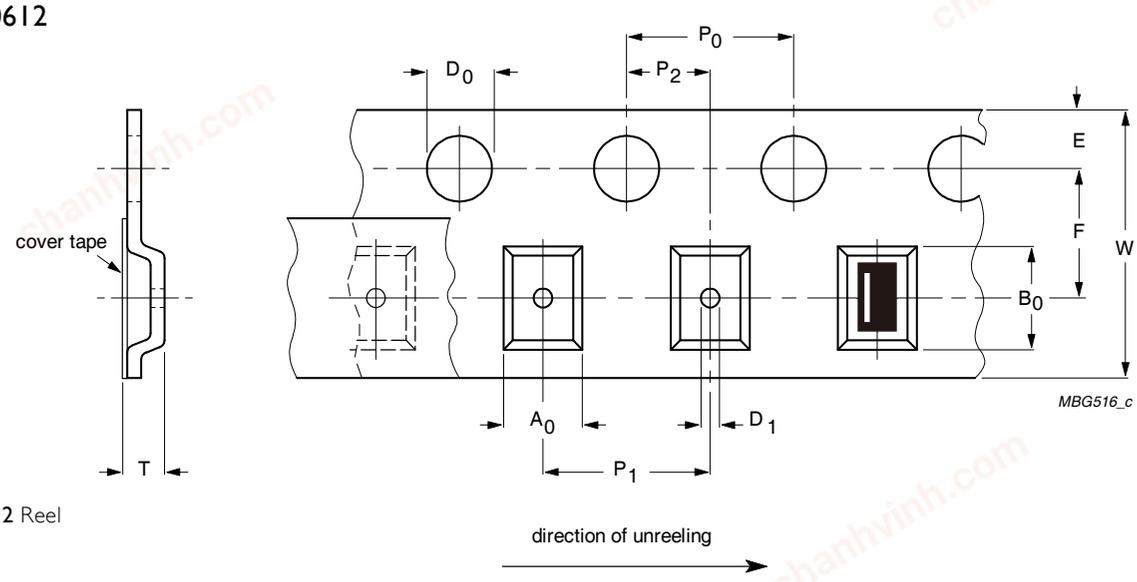

Fig. 12 Reel

PS3637

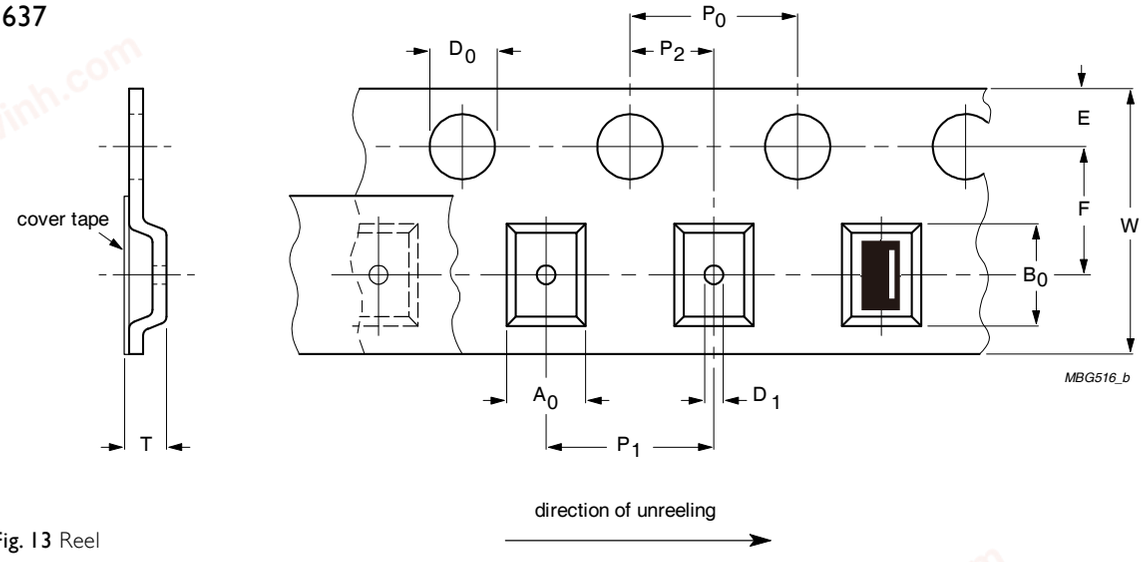

Fig. 13 Reel

Table 7 Dimensions of reel specification for relevant chip resistors size

SIZE	QUANTITY PER REEL	REEL SIZE TAPE WIDE	SYMBOL A	N	W_1	$W_{2\ MAX.}$
						Unit: mm
PS0612	4000	7"(Ø 178 mm)	178.0±5.0	60.0±2.0	9.0±0.2	12.4
PS3637	4000	13"(Ø 330 mm)	330+0/-2	62.0±1.5	12.4	18.4

chanhvinh.com

REEL SPECIFICATION

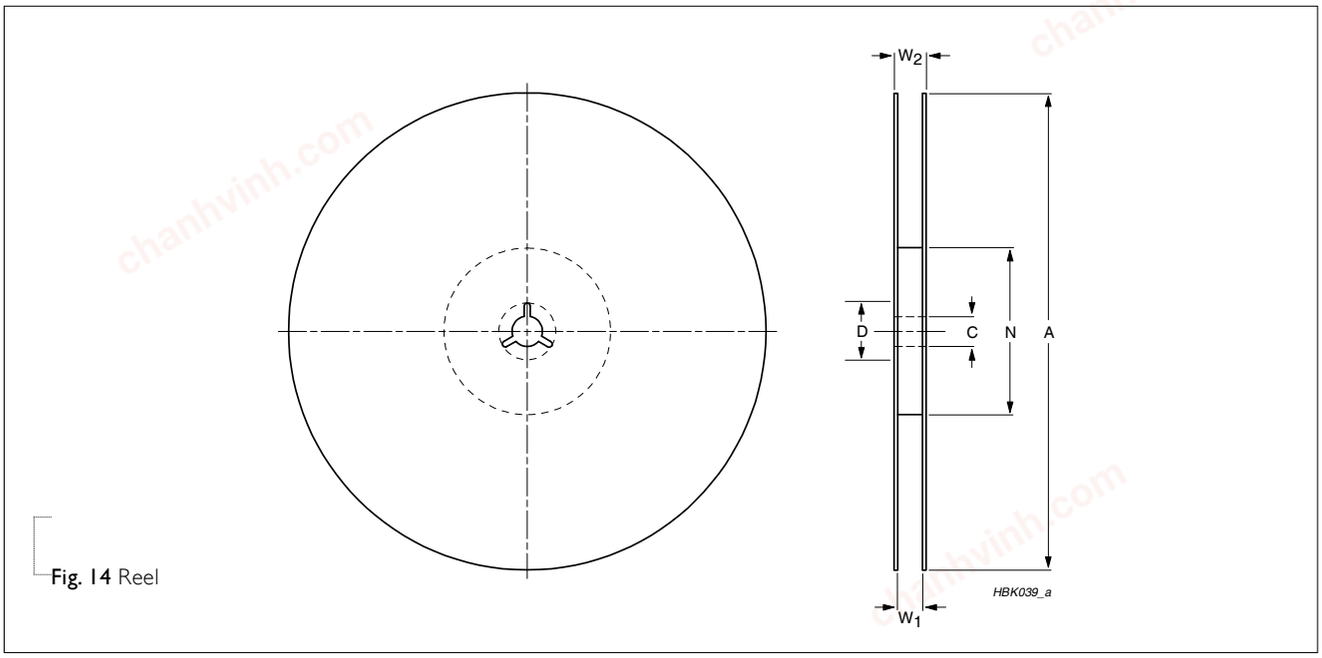

Fig. 14 Reel

Table 8 Dimensions of reel specification for relevant chip resistors size

Unit: mm

SIZE	QUANTITY PER REEL	REEL SIZE	SYMBOL			
		TAPE WIDE	A	N	W_1	$W_{2\ MAX.}$
PS0204	10000	7"(Ø 178 mm)	178.0±5.0	60.0±2.0	9.0±0.2	12.4
PS0306	5000	7"(Ø 178 mm)	178.0±5.0	60.0±2.0	9.0±0.2	12.4
PS0612	4000	7"(Ø 178 mm)	178.0±5.0	60.0±2.0	9.0±0.2	12.4
PS3637	4000	13"(Ø 330 mm)	330+0/-2	62.0±1.5	12.2±0.2	18.4

chanhvinh.com

SOLDERING PROFILES

For recommended soldering profiles, please refer to data sheet “Chip resistors mounting”.

FOOTPRINT

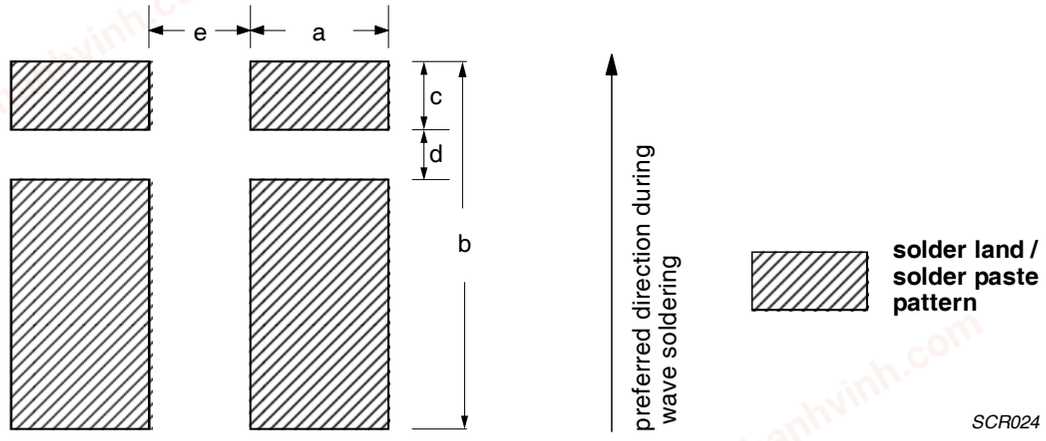

Fig. 15 Single resistor chips recommended dimensions of footprints

Table 9 Footprint dimensions

SIZE FOOTPRINT		DIMENSIONS CODE					Unit: mm
		a	b	c	d	e	t(um)
PS0204		0.35	1.30	0.30	0.20	0.20	105
PS0306		0.40	1.75	0.35	0.20	0.20	105
PS0612		1.00	3.50	0.80	0.38	0.75	105
PS3637	1 mΩ	4.27	9,91	1.68	0.61	1.88	105
	2 mΩ~5 mΩ	2.95	9,91	1.68	0.61	4.52	105

chanhvinh.com

TESTS AND REQUIREMENTS

Table 10 Test condition, procedure and requirements

TEST	TEST METHOD	PROCEDURE	REQUIREMENT
Short time overload	IEC60115-1 4.13	5 times of rated power for 5 seconds at room temperature	±(1.0%+0.0005Ω)
High Temperature Exposure/ Endurance at Upper Category Temperature	AEC -Q200 Test 3 MIL-STD-202G-Method 108	1,000 hours at maximum operating temperature depending on specification, unpowered No direct impingement of forced air to the parts	±(1.0%+0.0005Ω)
Temperature Cycling	AEC -Q200 Test 4 JESD22-A104	1,000 cycles, (1) –55 °C to +125 °C (2) –55 °C to +155 °C For one cycle, Dwell time 15 minutes. Temperature range depends on the specification. Refer to the derating curve.	0204/0612/3637 ±(1.0%+0.0005Ω) ±(3.0%+0.0005Ω) : R ≥10mΩ 0306 ±(1.0%+0.0005Ω) ±(3.0%+0.0005Ω) : R >50mΩ
Biased Humidity	AEC -Q200 Test 7 MIL-STD-202 Method 103	1,000 hours; 85°C / 85% RH 10% of operating power	0204/0612/3637 ±(1.0%+0.0005Ω) ±(3.0%+0.0005Ω) : R ≥10mΩ 0306 ±(1.0%+0.0005Ω) ±(3.0%+0.0005Ω) : R >50mΩ
Life	AEC -Q200 Test 8 MIL-STD-202 Method 108	1,000 hours at 70±2°C applied rated power 1.5 hours on, 0.5 hour off	±(1.0%+0.0005Ω)
		1,000 hours at terminal temperature 110 °C applied rated power 1.5 hours on, 0.5 hour off	PS0612(1.5W): ±(1.0%+0.0005Ω)
Resistance to Solvents	AEC -Q200 Test 12 MIL-STD-202 Method 215	Immerse in isopropyl alcohol for 5 min with ultrasonic at room temperature	No visible damage
Mechanical Shock	AEC -Q200 Test 13 MIL-STD-202 Method 213	Three shocks in each direction, applied along the three mutually perpendicular axes of the test specimen (18 shocks) Peak value: 100 g's Duration: 6 ms Velocity change: 12.3 ft/s Waveform: Half sine	± (0.5%+0.0005Ω)
Vibration	AEC -Q200 Test 14 MIL-STD-202 Method 204	5 g's for 20 min., 12 cycles each of 3 orientations Test from 10-2000 Hz.	± (0.5%+0.0005Ω)

chanhvinh.com

TEST	TEST METHOD	PROCEDURE	REQUIREMENT
Resistance to Soldering Heat	AEC -Q200 Test 15 MIL-STD-202G-Method 210	Specimen passed 3 times reflow temperature at 260°C, with solder	No visible damage
Electrostatic Discharge	AEC -Q200 Test 17 AEC -Q200 Test 002	Test voltage 2KV, HBM mode 150pF @2KΩ1+ and 1-	±(1.0%+0.0005Ω) No visible damage
Solderability - Wetting	AEC -Q200 Test 18 J-STD-002	(1) Baking 4 hours at 155°C dry heat, dipping at 245±3°C for 5±0.5 seconds. (2) Baking 4 hours at 155°C dry heat, dipping at 260±3°C for 30±0.5 seconds.	Well tinned (>95% covered) No visible damage
Flammability	AEC -Q200 Test 20 UL94	Try to inflame a specimen by a needle flame	No ignition of specimen; V-0
Board Flex / Bending	AEC -Q200 Test 21 AEC-Q200-005	Chips mounted on a glass epoxy resin PCB (FR4), Bending 2 mm for 60+5 seconds	±(1.0%+0.0005Ω)
Terminal Strength (SMD)	AEC -Q200 Test 22 AEC-Q200-006	Applied force: 4.9 N (0.5 kg) for 0204 9.8 N (1.0 kg) for 0306 17.7 N (1.8 kg) for 0612, 3637 — applied for 60 ± 1 seconds	±(1.0%+0.0005Ω) No visible damage
Flame Retardance	AEC -Q200 Test 24 AEC-Q200-001	Only requested, when voltage/power will increase the surface Temp. to 350°C	No flame, no explosion
Temperature Coefficient of Resistance (T.C.R.)	MIL-STD-202 Method 304 IEC 60115-1 4.8	at +25/+125 °C Formula: $T.C.R = \frac{R_2 - R_1}{R_1(t_2 - t_1)} \times 10^6$ (ppm/°C) Where t_1 =+25 °C or specified room temperature t_2 =+125 °C test temperature R_1=resistance at reference temperature in ohms R_2=resistance at test temperature in ohms	Refer to table 2
Flower-of-Sulfur (FOS)	Modified ASTM B809-95	Sulfur 105°C, 750 hours, unpowered.	±(1.0%+0.0005Ω)

chanhvinh.com

REVISION HISTORY

REVISION	DATE	CHANGE NOTIFICATION	DESCRIPTION
Version 6	Dec. 12, 2025		- Extend 0204 resistor value
Version 5	Jul. 21 2025		- Add derating curve of PS0612(1.5W)for terminal temperature
Version 4	Apr. 29, 2025	-	- Add PS3637 series - Add AEC-Q200 & MSL1
Version 3	Oct. 25, 2023	-	- PS0612 Power rating upgrade
Version 2	May 18, 2021	-	- Mark resistor outline in diagrams of paper tape (Fig. 4) and embossed tape (Fig. 5) - Add Tol. 0.5% for PS0612, 2mΩ and extend resistor value for PS0306
Version 1	July 16, 2019	-	- Extend resistor value
Version 0	Mar. 06, 2017	-	- New datasheet for current sensor - low TCR 4 terminal PS series

chanhvinh.com

LEGAL DISCLAIMER

YAGEO, its distributors and agents (collectively, "YAGEO"), hereby disclaims any and all liabilities for any errors, inaccuracies or incompleteness contained in any product related information, including but not limited to product specifications, datasheets, pictures and/or graphics. YAGEO may make changes, modifications and/or improvements to product related information at any time and without notice.

YAGEO makes no representation, warranty, and/or guarantee about the fitness of its products for any particular purpose or the continuing production of any of its products. To the maximum extent permitted by law, YAGEO disclaims (i) any and all liability arising out of the application or use of any YAGEO product, (ii) any and all liability, including without limitation special, consequential or incidental damages, and (iii) any and all implied warranties, including warranties of fitness for a particular purpose, non -infringement and merchantability.

YAGEO products are designed for general purpose applications under normal operation and usage conditions. Please contact YAGEO for the applications listed below which require especially high reliability for the prevention of defects which might directly cause damage to the third party's life, body or property: Aerospace equipment (artificial satellite, rocket, etc.), Atomic energy-related equipment, Aviation equipment, Disaster prevention equipment, crime prevention equipment, Electric heating apparatus, burning equipment, Highly public information network equipment, data-processing equipment , Medical devices, Military equipment, Power generation control equipment, Safety equipment, Traffic signal equipment, Transportation equipment and Undersea equipment, or for any other application or use in which the failure of YAGEO products could result in personal injury or death, or serious property damage. Particularly **YAGEO Corporation and its affiliates do not recommend the use of commercial or automotive grade products for high reliability applications or manned space flight.**

Information provided here is intended to indicate product specifications only. YAGEO reserves all the rights for revising this content without further notification, as long as products are unchanged. Any product change will be announced by PCN.