chanhvinh.com

Innovative Service Around the Globe YAGEO

DATA SHEET

CURRENT SENSOR - LOW TCR AUTOMOTIVE GRADE

PA_E series

5%, 1%, 0.5%

sizes 2512

RoHS compliant & Halogen free



YAGEO Phycomp

Product specification – January 31, 2018 V.10

chanhvinh.com

SCOPE

This specification describes PA series current sensor - low TCR with lead-free terminations made by metal substrate.

APPLICATIONS

- Consumer goods
- Computer
- Telecom / Datacom
- Industrial / Power supply
- Alternative Energy
- Car electronics

FEATURES

- AEC-Q200 qualified
- Halogen-free Epoxy
- RoHS compliant
- Reduce environmentally hazardous wastes
- High component and equipment reliability
- Non-forbidden materials used in products/production
- Low resistances applied to current sensing
- Anti-sulfur

ORDERING INFORMATION - GLOBAL PART NUMBER

Global part numbers are identified by the series, size, tolerance, packing type, temperature coefficient, taping reel and resistance value.

GLOBAL PART NUMBER

PA	XXXX	X	X	X	XX	XXXX	E
	(1)	(2)	(3)	(4)	(5)	(6)	(7)

(1) SIZE

2512

(2) TOLERANCE

D= ± 0.5%

F = ±1%

J = ±5%

(3) PACKAGING TYPE

K = Embossed taping reel

(4) TEMPERATURE COEFFICIENT OF RESISTANCE

F = ± 100 ppm/°C

M = ± 75ppm/°C

E = ± 50ppm/°C

(5) TAPING REEL

07 = 7 inch dia. Reel & standard power (1W)

7W = 7 inch dia. Reel & 2 x standard power (2W)

7T = 7 inch dia. Reel & 3 x standard power (3W)

(6) RESISTANCE VALUE

0.5 mΩ to 100 mΩ

(7) DEFAULT CODE

Letter E is the system default code for ordering only. (Note)

Resistance rule of global part number

Resistance code rule	Example
XUXX	0U5 = 0.5mΩ
0RXXX	0R001 = 1 mΩ
(1 to 100 mΩ)	0R05 = 50 mΩ

ORDERING EXAMPLE

The ordering code of a PA2512 1W chip resistor, TC100, value 0.003Ω with ±1% tolerance, supplied in 7-inch tape reel is: PA2512FKF070R003E

NOTE

1. All our RChip products are RoHS compliant. "LFP" of the internal 2D reel label mentions "Lead-Free Process"

chanhvinh.com

MARKING

PA2512

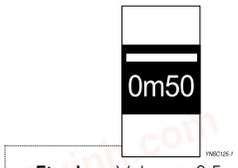

Fig. 1 Value = 0.5 mΩ

4 digits
The "m" is used as decimal point; the other 3 digits are significant and the unit is milliohm

PA2512: 0.5mΩ and 0.75mΩ

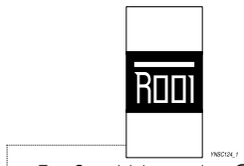

Fig. 2 Value = 1 mΩ

4 digits
The "R" is used as a decimal point; the other 3 digits are significant
PA2512: 1mΩ to 4 mΩ



Fig. 3 Value = 5 mΩ

4 digits
The "R" is used as a decimal point; the other 3 digits are significant
PA2512: 5 mΩ to 100 mΩ

CONSTRUCTION

The resistors are constructed using outstanding TCR level material, which makes Yageo PA resistors excellent for current sensing application in battery charger circuit & DC-DC converter.

The composition of the resistive material is adjusted to give the approximate required resistance and is covered with a protective coating. Marking is printed on the top side of the resistor.

Finally, the three external terminations (Cu / Ni / matte Tin) are added, as shown in Fig. 4.

Outlines

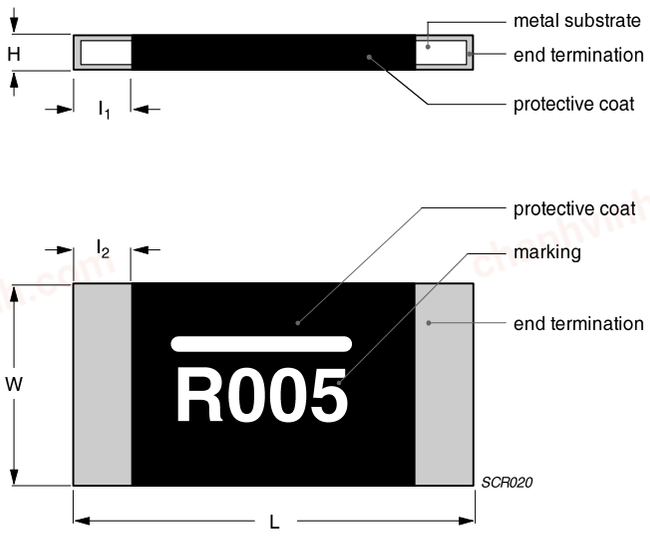

Fig. 4 Chip resistor outlines

chanhvinh.com

DIMENSION

Table 1 For outlines, please refer to Fig. 4

TYPE	RESISTANCE RANGE	L (mm)	W (mm)	H (mm)	I_1 (mm)	I_2 (mm)
PA2512	0.5mΩ ≤ R ≤ 0.75mΩ	6.35±0.25	3.18±0.25	0.63±0.25	2.72±0.25	2.72±0.25
	1mΩ ≤ R ≤ 4mΩ	6.35±0.25	3.18±0.25	0.63±0.25	2.21±0.25	2.21±0.25
	5mΩ ≤ R ≤ 6mΩ	6.35±0.25	3.18±0.25	0.63±0.25	1.19±0.25	1.19±0.25
	7mΩ ≤ R ≤ 100mΩ	6.35±0.25	3.18±0.25	0.63±0.25	0.76±0.25	0.76±0.25

Note:
1. For relevant physical dimensions, please refer to construction outlines.
2. Please contact with sales offices, distributors and representatives in your region before ordering.

ELECTRICAL CHARACTERISTICS

Table 2

TYPE	SIZE	POWER RATING	TOLERANCE	RESISTANCE RANGE	TEMPERATURE COEFFICIENT OF RESISTANCE
PA	2512	1W	±0.5%	0.5mΩ ≤ R ≤ 100mΩ	±50ppm/°C
		2W	±1%		±75ppm/°C
		3W	±5%		±100ppm/°C

Note: Please contact with sales offices, distributors and representatives in your region before ordering.

FUNCTIONAL DESCRIPTION

OPERATING TEMPERATURE RANGE

PA2512 Range: –55°C to +170°C

POWER RATING

Standard rated power at 70°C:

For detail power value, please refer to Table 2.

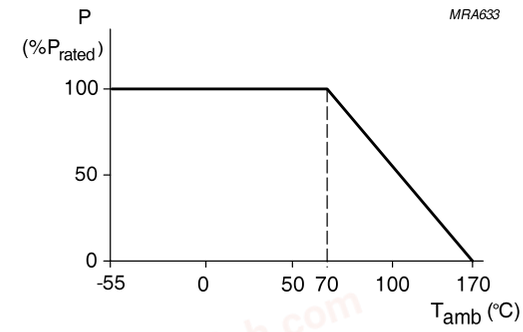

Fig. 5 Maximum dissipation (P_{max}) in percentage of rated power as a function of the operating ambient temperature (T_{amb})

RATED VOLTAGE

The DC or AC (rms) continuous working voltage corresponding to the rated power is determined by the following formula:

$$V = \sqrt{(PxR)}$$

Where

V = Continuous rated DC or AC (rms) working voltage (V)

P = Rated power (W)

R = Resistance value (Ω)

chanhvinh.com

PACKING STYLE AND PACKAGING QUANTITY

Table 3 Packing style and packaging quantity

PACKING STYLE	REEL DIMENSION	PA2512
Embossed taping reel (K)	7" (178 mm)	4,000

EMBOSSED TAPE

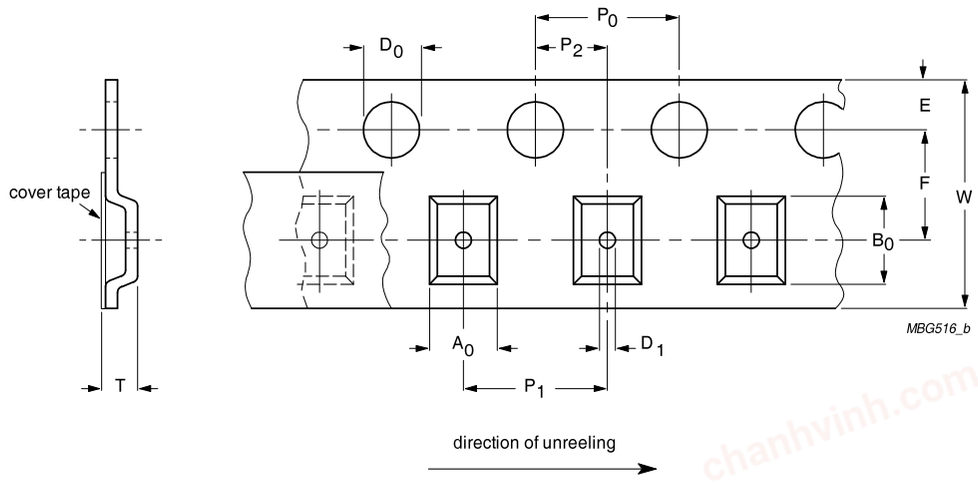

Fig. 6 Embossed Tape

Table 4 Dimensions of embossed tape for relevant chip resistors size

SIZE	SYMBOL										Unit: mm
	A_0	B_0	W	E	F	P_0	P_1	P_2	$\varnothing D_0$	$\varnothing D_1$	T
PA2512	3.40±0.15	6.70±0.15	12.00±0.30	1.75±0.10	5.50±0.10	4.00±0.10	4.00±0.10	2.00±0.10	1.55±0.05	1.50±0.10	0.80±0.15

chanhvinh.com

REEL SPECIFICATION

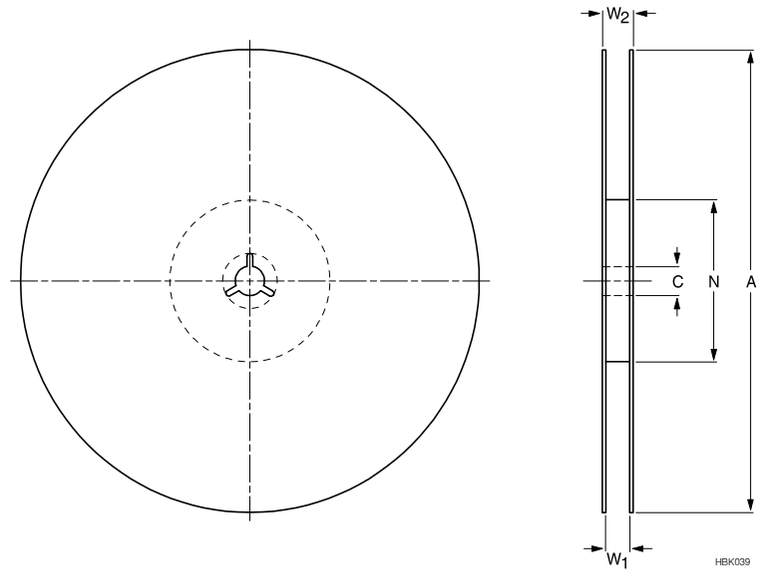

Fig. 7 Reel

Table 5 Dimensions of reel specification for relevant chip resistors size

SIZE	QUANTITY PER REEL	REEL SIZE		SYMBOL					Unit: mm
		8 mm TAPE WIDE	12 mm TAPE WIDE	A	N	C	D	W_1	$W_{2\ MAX.}$
PA2512	4000	--	7" (Ø178 mm)	178.0±1.0	60.0+1/-0	13.50±0.5	21.0±0.8	13.6±0.5	16.5±0.5

LEADER/TRAILER TAPE SPECIFICATION

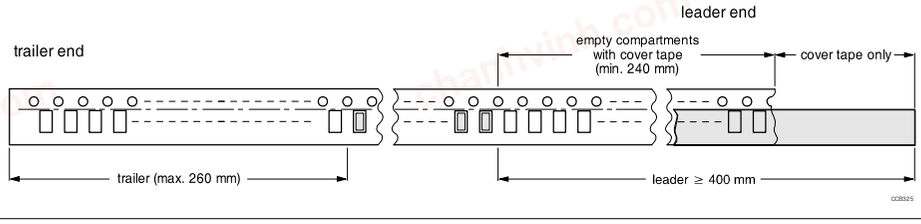

Fig. 8 Leader/Trailer Tape

chanhvinh.com

FOOTPRINT AND SOLDERING PROFILES

For recommended soldering profiles, please refer to data sheet “Chip resistors mounting”.

FOOTPRINT

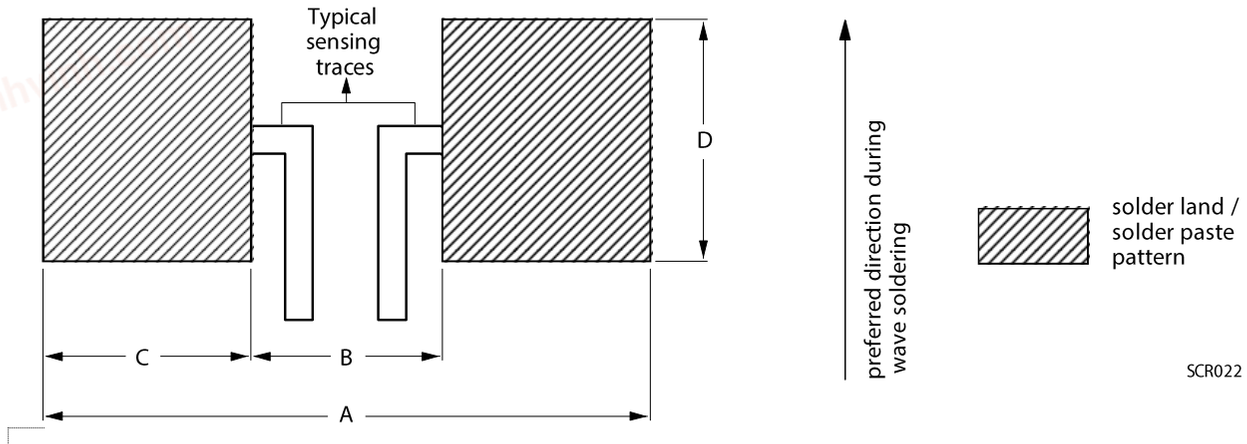

Fig. 9 Single resistor chips recommended dimensions of footprints

Table 6 Footprint dimensions

Unit: mm

SIZE	RESISTANCE RANGE	A	B	C	D
PA2512	0.5mΩ ≤ R < 1mΩ	7.36	0.50	3.43	3.68
	1mΩ ≤ R ≤ 4mΩ	7.37	1.27	3.05	3.68
	5mΩ ≤ R ≤ 6mΩ	7.40	3.18	2.11	3.68
	7mΩ ≤ R ≤ 100mΩ	7.36	4.06	1.65	3.68

chanhvinh.com

TESTS AND REQUIREMENTS

Table 8 Test condition, procedure and requirements

TEST	TEST METHOD	PROCEDURE	REQUIREMENT
Short time overload	IEC60115-1 4.13	5 times of rated power for 5 seconds at room temperature	±(0.5%+0.0005Ω) No visible damage
High Temperature Exposure	MIL-STD-202-Method 108	1,000 hours at maximum operating temperature depending on specification, unpowered No direct impingement of forced air to the parts Tolerances: 170±3°C	±(1.0%+0.0005Ω)
Temperature Cycling	JESD22-A104C	1,000 cycles, -55/+125°C for 1 cycle per hour	±(0.5%+0.0005Ω)
Moisture Resistance	MIL-STD-202-Method 106	Each temperature / humidity cycle is defined at 8 hours (method 106F), 3 cycles / 24 hours for 10d with 25°C / 65°C 95% R.H, without steps 7a & 7b, unpowered	±(0.5%+0.0005Ω)
Biased Humidity	MIL-STD-202 Method 103	1,000 hours; 85°C / 85% RH 10% of operating power	±(0.5%+0.0005Ω)
Operational Life/ Endurance	MIL-STD-202-Method 108	1,000 hours at 125±3°C, de-rated voltage applied for 1.5 hours on, 0.5 hour off, still-air required	±(1.0%+0.0005Ω)
		1,000 hours at 70±2°C applied RCWV 1.5 hours on, 0.5 hour off, still air required	±(1.0%+0.0005Ω)
Resistance to Solvents	MIL-STD-202 Method 215	Immerse in isopropyl alcohol for 5 min with ultrasonic at room temperature	No Visible damage
Mechanical Shock	MIL-STD-202 Method 213	Three shocks in each direction shall be applied along the three mutually perpendicular axes of the test specimen. Peak value: 100 g's Duration: 6 ms Velocity change: 12.3 ft/s Waveform: Half sine	±(0.5%+0.0005Ω)
Vibration	MIL-STD-202 Method 204	5 g's for 20 min., 12 cycles each of 3 orientations Test from 10-2000 Hz.	±(0.5%+0.0005Ω)
Resistance to Soldering Heat	MIL-STD-202-method 210	Condition B, no pre-heat of samples Leadfree solder, 260°C, 10 seconds immersion time Procedure 2 for SMD: devices fluxed and cleaned with isopropanol	±(0.5%+0.0005Ω) No visible damage
Thermal Shock	MIL-STD-202 Method 107	-55/+125°C, Number of cycles is 300. Devices mounted. Maximum transfer time is 20 seconds. Dwell time is 15 minutes. Air -Air	±(0.5%+0.0005Ω) No visible damage

chanhvinh.com

TEST	TEST METHOD	PROCEDURE	REQUIREMENT
Electrostatic Discharge	AEC-Q200-002	Human Body Model, 1 pos + 1 neg. Discharges 2512=2KV	±(1.0%+0.0005Ω) No visible damage
Solderability - Wetting	J-STD-002B test B	(a) Method B, aging 4 hours at 155°C dry heat, dipping at 235±3°C for 5±0.5 seconds. (b) Method B, steam aging 8 hours, dipping at 215±3°C for 5±0.5 seconds. (c) Method D, steam aging 8 hours, dipping at 260±3 °C for 7±0.5 seconds.	Well tinned (>95% covered) No visible damage
Flammability	UL94	Try to inflame a specimen by a needle flame	No ignition of specimen; V-0
Board Flex / Bending	AEC-Q200-005	Chips mounted on a 90mm glass epoxy resin PCB (FR4), Bending for 2512=2 mm Holding time: Min.60 seconds	±(1.0%+0.0005Ω)
Terminal Strength (SMD)	AEC-Q200-006	Applied a 17.7N (1.8Kg) for 60±1 seconds.	±(1.0%+0.0005Ω) No visible damage
Flame Retardance	AEC-Q200-001	Apply voltage from 9V to 32V to increase the surface temp to 350°C	No flame, no explosion
Temperature Coefficient of Resistance (T.C.R.)	MIL-STD-202 Method 304	At +25/+150°C Formula: $T.C.R= \frac{R_2 - R_1}{R1(t_2 - t_1)} \times 10^6 (ppm/°C)$ Where t1=+25°C or specified room temperature t2=+150°C test temperature R1=resistance at reference temperature in ohms R2=resistance at test temperature in ohms	Refer to table 2
Flower-of-Sulfur (FOS)	Modified ASTM B809-95	Sulfur 105°C, 750 hours, unpowered.	±(1.0%+0.0005Ω)

chanhvinh.com

REVISION HISTORY

REVISION	DATE	CHANGE NOTIFICATION	DESCRIPTION
Version 10	Jan. 31, 2018	-	- Extend 0.5% Tolerance
Version 9	Nov. 21, 2017		- Extend resistor value for 3W
Version 8	Oct. 23, 2017	-	- Update footprint dimensions
Version 7	Jul. 24, 2017	-	- Add part number coding details for the relationship between taping reel and rated power
Version 6	Apr. 19, 2017	-	- Extend resistor value
Version 5	Nov. 30, 2016	-	- Extend resistor value
Version 4	Oct. 27, 2016	-	- Modify the error of test procedure
Version 3	Mar. 31, 2016	-	- Update TCR
Version 2	Dec. 31, 2015	-	- Extend resistor value
Version 1	Dec. 18, 2015	-	- Update tests and requirements

" Yageo reserves all the rights for revising the content of this datasheet without further notification, as long as the products itself are unchanged. Any product change will be announced by PCN."