chanhvinh.com

Innovative Service Around the Globe YAGEO

DATA SHEET

TRANSIENT VOLTAGE SUPPRESSORS
AC/DC POWER SUPPLY

P6SMB series

RoHS compliant & Halogen free



Product specification– June 30, 2023 V.5

chanhvinh.com

Transient Voltage Suppressors (TVS) Data Sheet

Features



- For surface mounted applications in order to optimize board space
- Low profile package
- Built-in strain relief
- Glass passivated junction
- Low inductance
- Excellent clamping capability
- 600W peak pulse power capability at 10/1000μs waveform, repetition rate (duty cycle): 0.01%
- Fast response time
- Typical IR less than 1 μ A above 12V
- High Temperature soldering: 260℃/10 seconds at terminals
- Plastic package has underwriters laboratory flammability 94V-0
- Meets MSL level 1, per J-STD-020
- Safety certification: UL
- IEC61000-4-2 ESD 30KV Air, 30KV contact compliance

Mechanical Data

- Case: JEDEC DO-214AA. Molded plastic over glass passivated junction
- Terminal: Tin plated, solderable per MIL-STD-750, Method 2026
- Polarity: Color band denotes cathode except bi-directional models
- Standard Packaging: 12mm tape (EIA STD RS-481)
- Weight: 0.10g

Applications

- I/O interface
- AC/DC power supply
- Low frequency signal transmission line (RS232, RS485, etc.)

Maximum Ratings and Characteristics

Ratings at 25℃ ambient temperature unless otherwise specified.

Rating	Symbol	Value	Units
Peak pulse power dissipation at 10/1000μs waveform (Note1, Note2, Fig.1)	P_{PPM}	Minimum 600	Watts
Peak pulse current of at 10/1000μs waveform (Note 1, Fig.3)	I_{PPM}	See Table	Amps
Steady state power dissipation at T_A=50℃ (Fig.5)	$P_{M(AV)}$	5.0	Watts
Peak forward surge current, 8.3ms single half sine-wave superimposed on rated load, (JEDEC Method) (Note3, Fig.6)	I_{FSM}	100	Amps
Operating junction and Storage Temperature Range.	T_J,T_{STG}	-55 to +150	℃
Typical thermal resistance junction to lead	$R_{\theta JL}$	20	℃/W
Typical thermal resistance junction to ambient	$R_{\theta JA}$	100	℃/W

Notes: 1. Non-repetitive current pulse, per Fig.3 and derated above T_A=25℃ per Fig.2.
2. Mounted on 5.0mm×5.0mm (0.03mm thick) copper pads to each terminal.
3. 8.3ms single half sine-wave, or equivalent square wave, duty cycle=4 pulses per minutes maximum.

chanhvinh.com

Dimensions (SMB/DO-214AA)

Product:

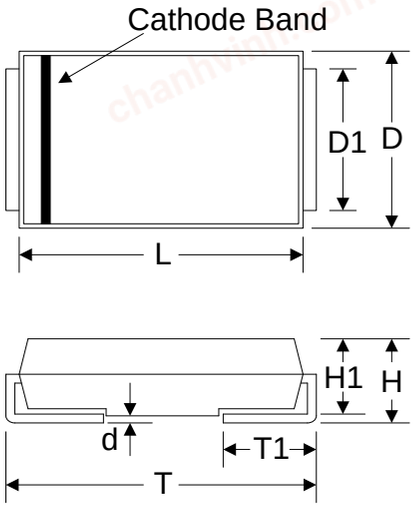

Pad:

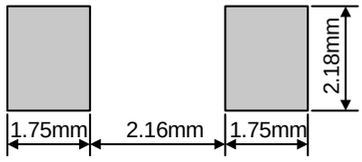

Symbol	Millimeters		Inches	
	Min.	Max.	Min.	Max.
L	4.06	4.57	0.160	0.180
D	3.30	3.94	0.130	0.155
D1	1.95	2.20	0.077	0.086
T	5.21	5.59	0.205	0.220
T1	0.76	1.52	0.030	0.060
d	-	0.203	-	0.008
H	2.15	2.65	0.085	0.104
H1	2.13	2.47	0.084	0.097

Electrical Characteristics (T_A=25℃)

Part Number		Device Marking Code		Reverse Stand-Off Voltage	Breakdown Voltage @I_T	Test Current	Maximum Clamping Voltage @I_{PP}	Peak Pulse Current	Reverse Leakage @V_{RWM}
Unidirectional	Bidirectional	UNI	BI	V_{RWM}(V)	V_{BR}(V)	I_T(mA)	V_C(V)	I_{PP}(A)	I_R(μA)
P6SMB6.8A	P6SMB6.8CA	6V8A	6V8C	5.80	6.45~7.14	10	10.5	58.1	1000
P6SMB7.5A	P6SMB7.5CA	7V5A	7V5C	6.40	7.13~7.88	10	11.3	54.0	500
P6SMB8.2A	P6SMB8.2CA	8V2A	8V2C	7.02	7.79~8.61	10	12.1	50.4	200
P6SMB9.1A	P6SMB9.1CA	9V1A	9V1C	7.78	8.65~9.55	1	13.4	45.5	50
P6SMB10A	P6SMB10CA	10A	10C	8.55	9.50~10.50	1	14.5	42.1	10
P6SMB11A	P6SMB11CA	11A	11C	9.40	10.50~11.60	1	15.6	39.1	5
P6SMB12A	P6SMB12CA	12A	12C	10.20	11.40~12.60	1	16.7	36.5	5
P6SMB13A	P6SMB13CA	13A	13C	11.10	12.40~13.70	1	18.2	33.5	1
P6SMB15A	P6SMB15CA	15A	15C	12.80	14.30~15.80	1	21.2	28.8	1
P6SMB16A	P6SMB16CA	16A	16C	13.60	15.20~16.80	1	22.5	27.1	1
P6SMB18A	P6SMB18CA	18A	18C	15.30	17.10~18.90	1	25.2	24.2	1
P6SMB20A	P6SMB20CA	20A	20C	17.10	19.00~21.00	1	27.7	22.0	1
P6SMB22A	P6SMB22CA	22A	22C	18.80	20.90~23.10	1	30.6	19.9	1
P6SMB24A	P6SMB24CA	24A	24C	20.50	22.80~25.20	1	33.2	18.4	1

chanhvinh.com

Part Number		Device Marking Code		Reverse Stand-Off Voltage	Breakdown Voltage @I_T	Test Current	Maximum Clamping Voltage @I_{PP}	Peak Pulse Current	Reverse Leakage @V_{RWM}
Unidirectional	Bidirectional	UNI	BI	V_{RWM}(V)	V_{BR}(V)	I_T(mA)	V_C(V)	I_{PP}(A)	I_R(μA)
P6SMB27A	P6SMB27CA	27A	27C	23.10	25.70~28.40	1	37.5	16.3	1
P6SMB30A	P6SMB30CA	30A	30C	25.60	28.50~31.50	1	41.4	14.7	1
P6SMB33A	P6SMB33CA	33A	33C	28.20	31.40~34.70	1	45.7	13.3	1
P6SMB36A	P6SMB36CA	36A	36C	30.80	34.20~37.80	1	49.9	12.2	1
P6SMB39A	P6SMB39CA	39A	39C	33.30	37.10~41.00	1	53.9	11.3	1
P6SMB43A	P6SMB43CA	43A	43C	36.80	40.90~45.20	1	59.3	10.3	1
P6SMB47A	P6SMB47CA	47A	47C	40.20	44.70~49.40	1	64.8	9.4	1
P6SMB51A	P6SMB51CA	51A	51C	43.60	48.50~53.60	1	70.1	8.7	1
P6SMB56A	P6SMB56CA	56A	56C	47.80	53.20~58.80	1	77.0	7.9	1
P6SMB62A	P6SMB62CA	62A	62C	53.00	58.90~65.10	1	85.0	7.2	1
P6SMB68A	P6SMB68CA	68A	68C	58.10	64.60~71.40	1	92.0	6.6	1
P6SMB75A	P6SMB75CA	75A	75C	64.10	71.30~78.80	1	103.0	5.9	1
P6SMB82A	P6SMB82CA	82A	82C	70.10	77.90~86.10	1	113.0	5.4	1
P6SMB91A	P6SMB91CA	91A	91C	77.80	86.50~95.50	1	125.0	4.9	1
P6SMB100A	P6SMB100CA	100A	100C	85.50	95.00~105.00	1	137.0	4.5	1
P6SMB110A	P6SMB110CA	110A	110C	94.00	105.00~116.00	1	152.0	4.0	1
P6SMB120A	P6SMB120CA	120A	120C	102.00	114.00~126.00	1	165.0	3.7	1
P6SMB130A	P6SMB130CA	130A	130C	111.00	124.00~137.00	1	179.0	3.4	1
P6SMB150A	P6SMB150CA	150A	150C	128.00	143.00~158.00	1	207.0	2.9	1
P6SMB160A	P6SMB160CA	160A	160C	136.00	152.00~168.00	1	219.0	2.8	1
P6SMB170A	P6SMB170CA	170A	170C	145.00	162.00~179.00	1	234.0	2.6	1
P6SMB180A	P6SMB180CA	180A	180C	154.00	171.00~189.00	1	246.0	2.5	1
P6SMB200A	P6SMB200CA	200A	200C	171.00	190.00~210.00	1	274.0	2.2	1
P6SMB220A	P6SMB220CA	220A	220C	185.00	209.00~231.00	1	328.0	1.9	1
P6SMB250A	P6SMB250CA	250A	250C	214.00	237.00~263.00	1	344.0	1.8	1
P6SMB300A	P6SMB300CA	300A	300C	256.00	285.00~315.00	1	414.0	1.5	1
P6SMB350A	P6SMB350CA	350A	350C	300.00	332.00~368.00	1	482.0	1.3	1
P6SMB400A	P6SMB400CA	400A	400C	342.00	380.00~420.00	1	548.0	1.1	1
P6SMB440A	P6SMB440CA	440A	440C	376.00	418.00~462.00	1	602.0	1.04	1
P6SMB480A	P6SMB480CA	480A	480C	408.00	456.00~504.00	1	658.0	0.9	1
P6SMB510A	P6SMB510CA	510A	510C	434.00	485.00~535.00	1	698.0	0.9	1
P6SMB530A	P6SMB530CA	530A	530C	450.00	503.50~556.50	1	725.0	0.8	1
P6SMB540A	P6SMB540CA	540A	540C	459.00	513.00~567.00	1	740.0	0.8	1
P6SMB550A	P6SMB550CA	550A	550C	467.00	522.50~577.50	1	760.0	0.8	1
P6SMB600A	P6SMB600CA	600A	600C	510.00	570.00~630.00	1	828.0	0.75	1

chanhvinh.com

Ratings and Characteristic Curves (T_A=25℃ unless otherwise noted)

Figure 1. Peak Pulse Power Rating Curve

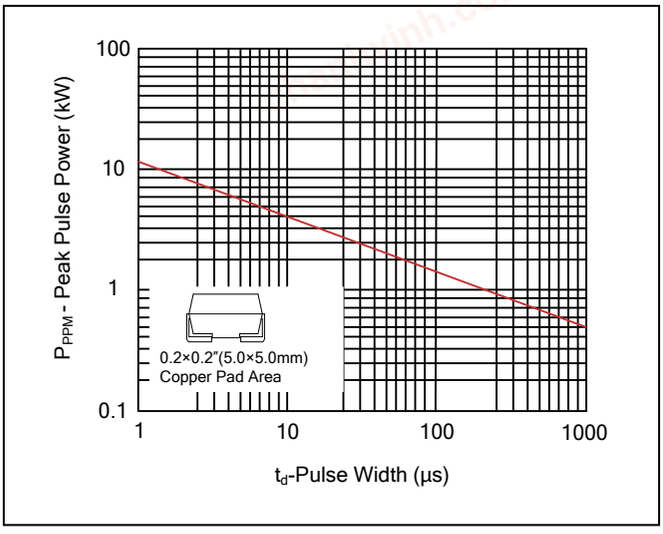

Figure 2. Pulse Derating Curve

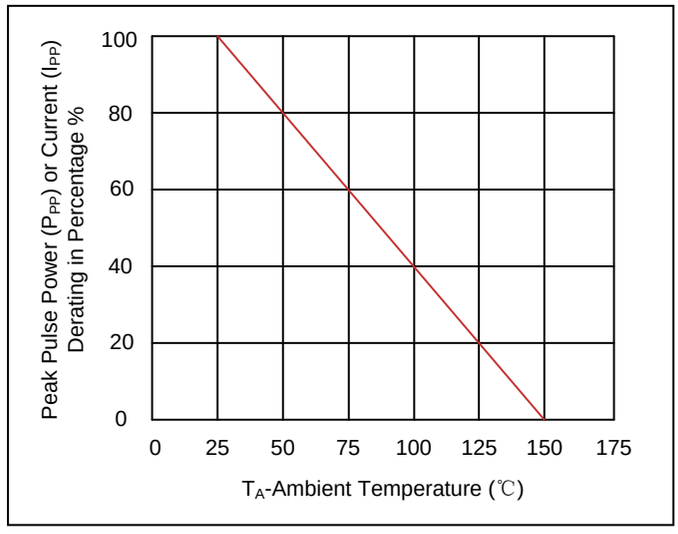

Figure 3. Pulse Waveform

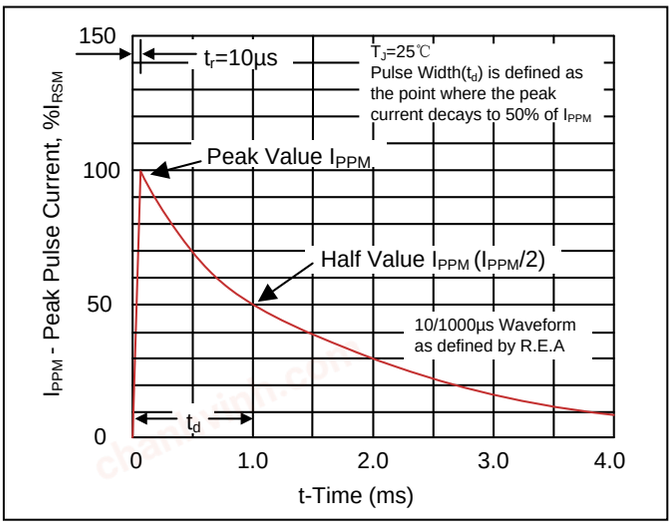

Figure 4. Typical Junction Capacitance

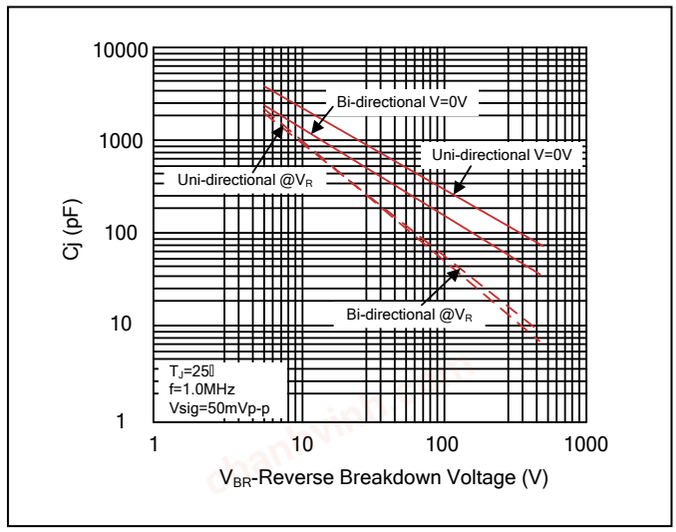

Figure 5. Steady State Power Dissipation Derating Curve

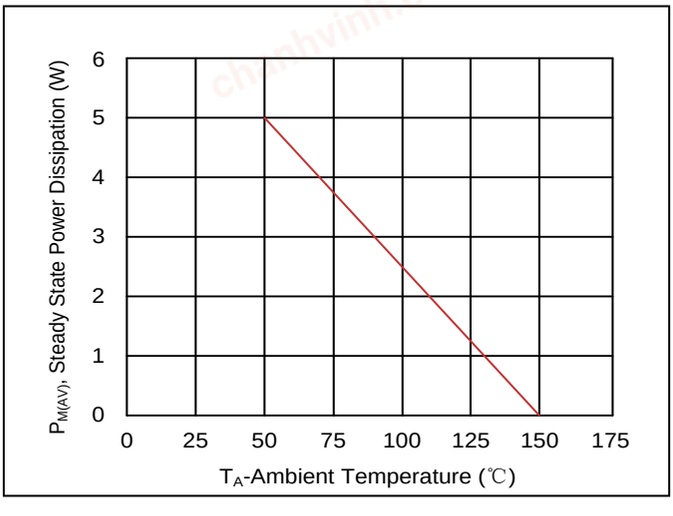

Figure 6. Maximum Non-Repetitive Forward Surge Current Uni-Directional Only

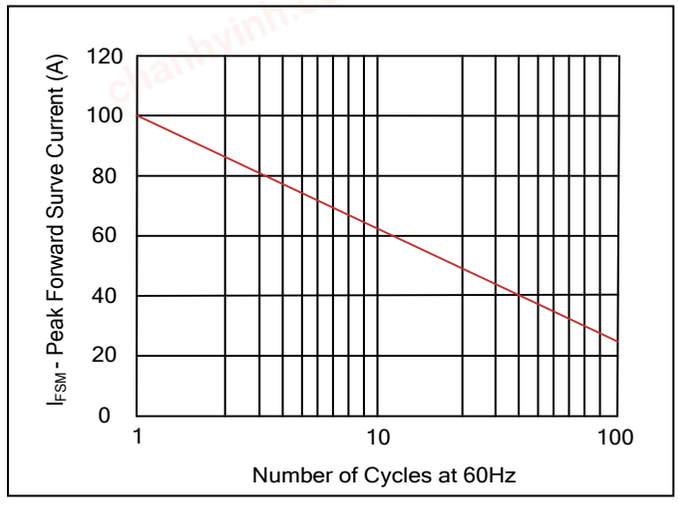

chanhvinh.com

Recommended Soldering Conditions

Reflow Soldering

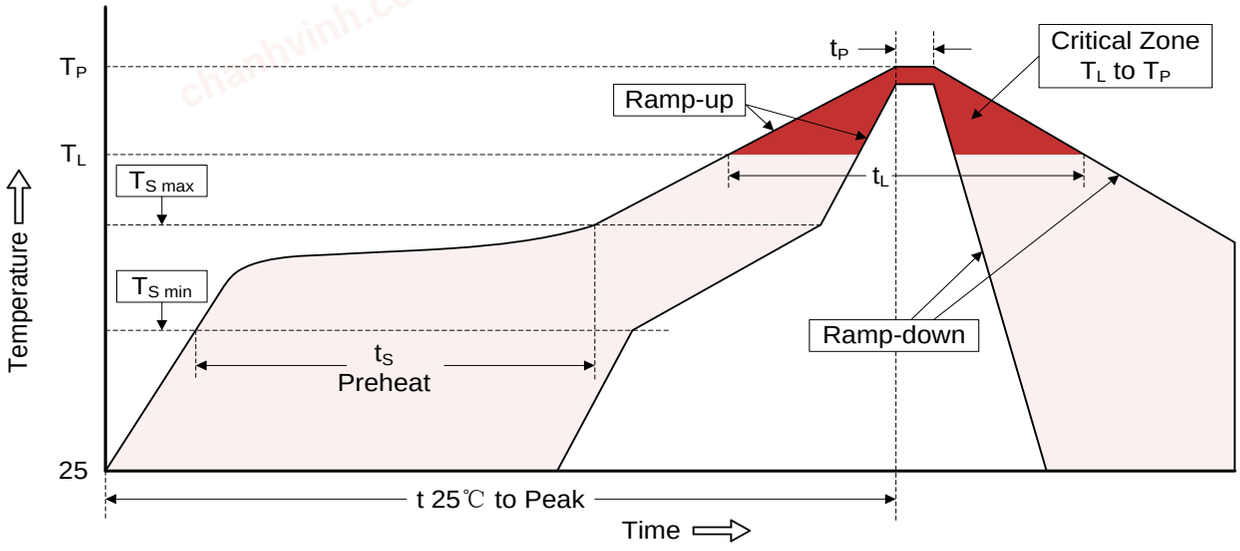

Recommended Conditions

Profile Feature	Pb-Free Assembly
Average ramp-up rate (T_L to T_P)	3℃/second max.
Preheat -Temperature Min ($T_{S\ min}$) -Temperature Max ($T_{S\ max}$) -Time (min to max) (t_S)	 150℃ 200℃ 60-180 seconds
$T_{S\ max}$ to T_L -Ramp-up Rate	 3℃/second max.
Time maintained above: -Temperature (T_L) -Time (t_L)	 217℃ 60-150 seconds
Peak Temperature (T_P)	260℃
Time within 5℃ of actual Peak Temperature (t_P)	20-40 seconds
Ramp-down Rate	6℃/second max.
Time 25℃ to Peak Temperature	8 minutes max.

chanhvinh.com

Marking Code

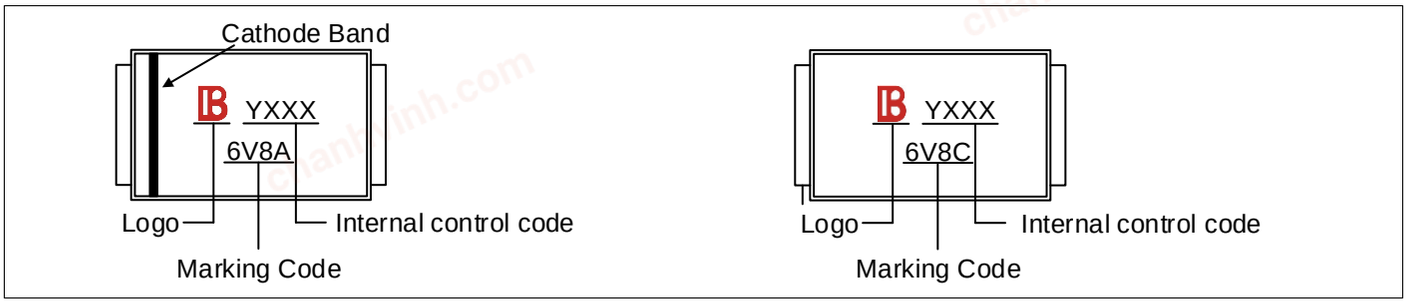

Part Number Code

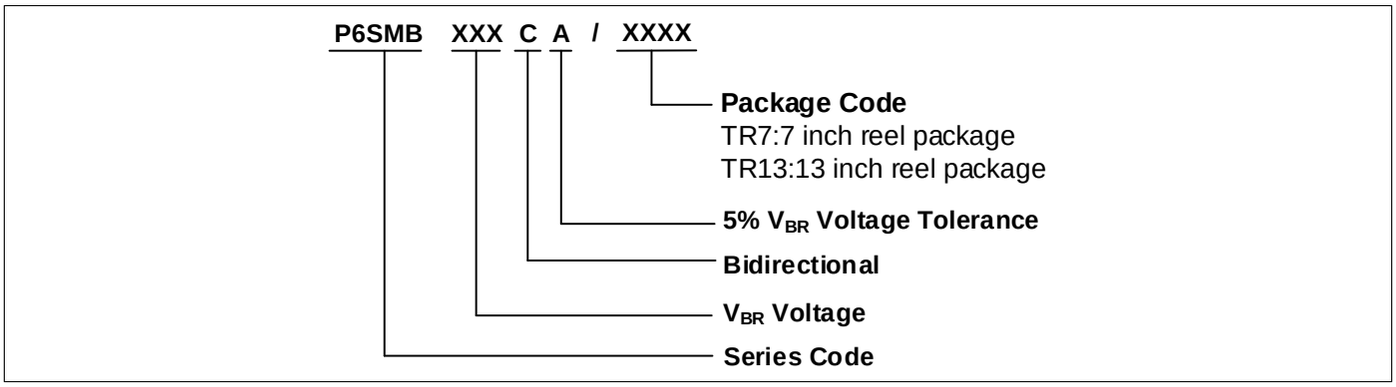

Ordering Code for Different Package

7 inch reel package: Add suffix " /TR7 " at the end of the part number, such as P6SMBXXXCA/TR7
13 inch reel package: Add suffix " /TR13 " at the end of the part number, such as P6SMBXXXCA/TR13

chanhvinh.com

Packaging

Tape

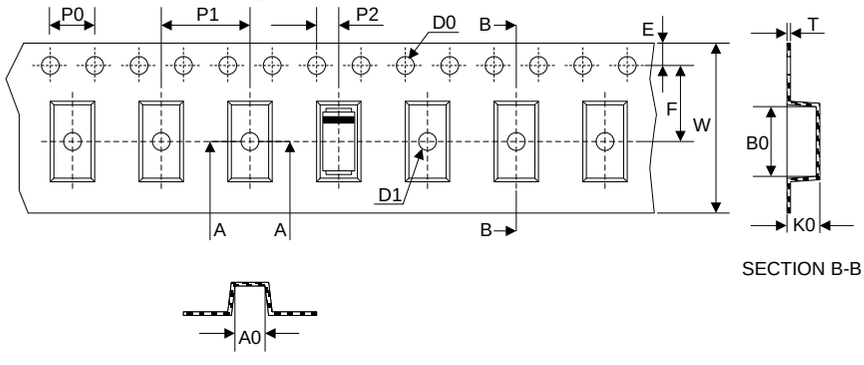

SECTION B-B

SECTION A-A

Symbol	Dimension (mm)
W	12.00±0.20
P0	4.00±0.10
P1	8.00±0.10
P2	2.00±0.10
D0	Φ1.55±0.10
D1	Φ1.5±0.10
E	1.75±0.10
F	5.50±0.10
A0	3.86±0.15
B0	5.65±0.10
K0	2.75±0.15
T	0.25±0.05

7” Reel

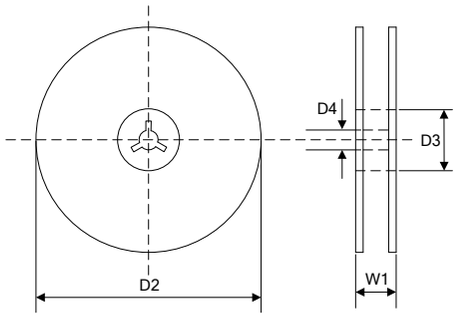

D2	Φ178.0±2.0
D3	Φ50.0Min.
D4	Φ13.0±0.5
W1	16.0±2.0
Quantity: 500PCS	

13” Reel

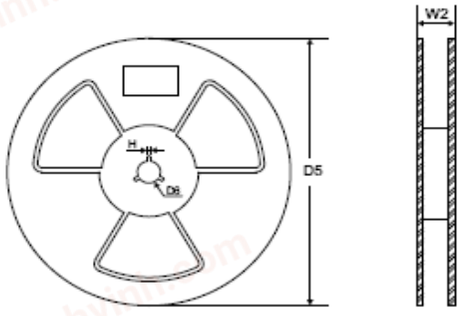

D5	Φ330.0±2.0
D6	Φ13.5±0.5
H	2.5±1.0
W2	16.0±2.0
Quantity: 3000PCS	

chanhvinh.com

LEGAL DISCLAIMER

YAGEO, its distributors and agents (collectively, "YAGEO"), hereby disclaims any and all liabilities for any errors, inaccuracies or incompleteness contained in any product related information, including but not limited to product specifications, datasheets, pictures and/or graphics. YAGEO may make changes, modifications and/or improvements to product related information at any time and without notice.

YAGEO makes no representation, warranty, and/or guarantee about the fitness of its products for any particular purpose or the continuing production of any of its products. To the maximum extent permitted by law, YAGEO disclaims (i) any and all liability arising out of the application or use of any YAGEO product, (ii) any and all liability, including without limitation special, consequential or incidental damages, and (iii) any and all implied warranties, including warranties of fitness for a particular purpose, non -infringement and merchantability.

YAGEO products are designed for general purpose applications under normal operation and usage conditions. Please contact YAGEO for the applications listed below which require especially high reliability for the prevention of defects which might directly cause damage to the third party's life, body or property: Aerospace equipment (artificial satellite, rocket, etc.), Atomic energy-related equipment, Aviation equipment, Disaster prevention equipment, crime prevention equipment, Electric heating apparatus, burning equipment, Highly public information network equipment, data-processing equipment , Medical devices, Military equipment, Power generation control equipment, Safety equipment, Traffic signal equipment, Transportation equipment and Undersea equipment, or for any other application or use in which the failure of YAGEO products could result in personal injury or death, or serious property damage. Particularly **YAGEO Corporation and its affiliates do not recommend the use of commercial or automotive grade products for high reliability applications or manned space flight.**

Information provided here is intended to indicate product specifications only. YAGEO reserves all the rights for revising this content without further notification, as long as products are unchanged. Any product change will be announced by PCN.