chanhvinh.com

Innovative Service Around the Globe YAGEO

DATA SHEET

MELF METAL FILM RESISTORS

High Power

MMP Series

±1%, ±2%, ±5%

1W AND 2W

RoHS compliant & Halogen Free

YAGEO

Product specification – November 3, 2025 V.3



chanhvinh.com



APPLICATIONS

- All general purpose applications
- Power applications
- Energy meter

FEATURES

- AEC-Q200 qualified
- MELF, SMD package
- Excellent pulse withstanding capability
- Ultra miniature size
- Higher power rating
- RoHS compliant and halogen free

ORDERING INFORMATION

Part number of the power MELF metal film resistor is identified by the series, power rating, tolerance, packing, temperature coefficient and resistance value.

PART NUMBER

MMP	100	J	R	-	100R
(1)	(2)	(3)	(4)	(5)	(6)

(1) SERIES

MMP Series

(2) POWER RATING

100 = 1W
200 = 2W

(3) TOLERANCE

F = ±1%
G = ±2%
J = ±5%
- = Based on spec.

(4) PACKAGING

R = Reel Pack

(5) TEMPERATURE COEFFICIENT OF RESISTANCE

E=±50ppm/°C
F=±100ppm/°C
- = Based on spec.

(6) RESISTANCE VALUE

E24 & E96 Series value
Example:
1R = 1Ω, 10K = 10,000Ω, 1M = 1,000,000Ω

chanhvinh.com

DIMENSIONS

Unit: mm



Ultra Miniature	L	D	C Min.
MMP100	5.90 ± 0.2	2.20 ± 0.1	0.5
MMP200	8.50 ± 0.2	3.20± 0.2	0.5

SUGGESTED PAD LAYOUT

Unit: mm

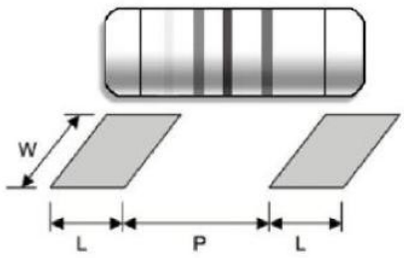

Ultra Miniature	Soldering Mode	L Min.	P	W Min.
MMP100	Reflow	2.0	3.0 ± 0.1	3.0
	Wave	2.5	3.0 ± 0.1	3.0
MMP200	Reflow	2.3	5.5 ± 0.2	4.0
	Wave	2.8	5.5 ± 0.2	4.0

DERATING CURVE

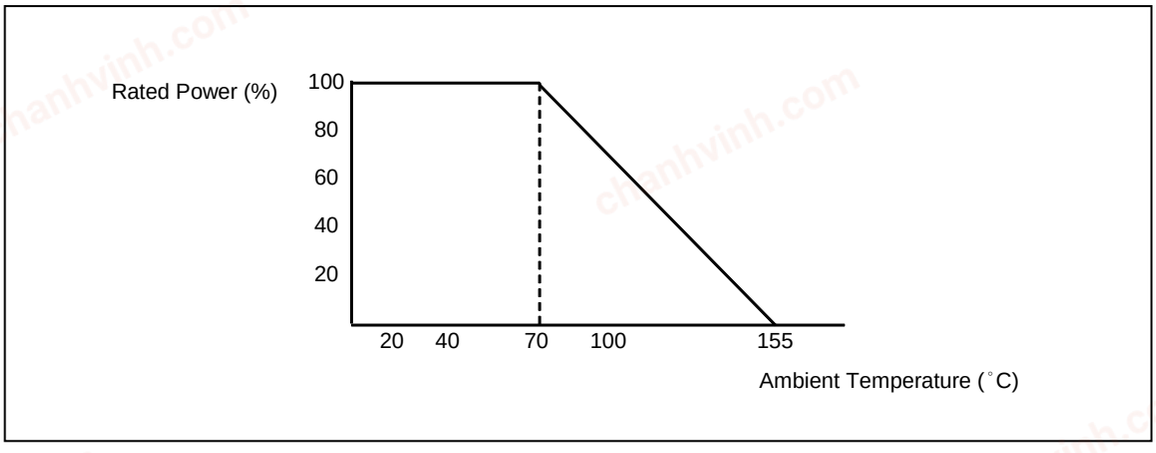

chanhvinh.com

ELECTRICAL CHARACTERISTICS

CHARACTERISTICS	MMP100	MMP200
Power Rating at 70 °C	1W	2W
Maximum Working Voltage	350V	350V
Maximum Overload Voltage	700V	700V
Voltage Proof on Insulation	500V	500V
Resistance Range	1Ω ~ 1MΩ & 0Ω for E24 & E96 series value	
Operating Temp. Range	- 55°C to +155°C	
Temperature Coefficient	±50ppm/°C, ±100ppm/°C	

Note: For resistance value out of above range is by request.

TEST AND REQUIRMENTS

TEST	TEST METHOD	PROCEDURE	APPRAISE
Short Time Overload	IEC 60115-1 4.13	2.5 times RCWV for 5 sec.(Not more than maximum overload voltage)	±0.5%+0.05Ω
Voltage Proof on Insulation	IEC 60115-1 4.7	In V-Block for 60 sec. test voltage as above table	No Breakdown
Temperature Coefficient	IEC 60115-1 4.8	Between -55°C to +155°C	By Type
Insulation Resistance	IEC 60115-1 4.6	In V-Block for 60 sec.	>10,000MΩ
Solderability	IEC 60115-1 4.17	245±5°C for 3±0.5 Sec.	95% Min. coverage
Solvent Resistance of Marking	IEC 60115-1 4.30	IPA for 5±0.5 Min. with ultrasonic	No deterioration of coatings and markings
Periodic-pulse Overload	IEC 60115-1 4.39	4 times RCWV 10,000 cycles (1 Sec. on, 25 Sec.off)	±1.0%+0.05Ω
Damp Heat Steady State	IEC 60115-1 4.24	40±2°C,90-95% RH for 56 days, loaded with 0.1 times RCWV	±2.0%+0.05Ω
Endurance at 70°C	IEC 60115-1 4.25	70±2°C at RCWV(or Umax., whichever less) for 1,000 Hr.(1.5 Hr.on,0.5 Hr. off)	±2.0%+0.05Ω
Temperature Cycling	IEC 60115-1 4.19	➔ -55°C ➔ Room Temp. ➔ +155°C Room Temp.(5 cycles)	±0.75%+0.05Ω
Resistance to Soldering Heat	IEC 60115-1 4.18	260±3°C for 10±1 Sec., immersed to a point 3±0.5mm from the body	±0.5%+0.05Ω

chanhvinh.com

Note:

RCWV (Rated Continuous Working Voltage):

The DC or AC (rms) continuous working voltage corresponding to the rated power is determined by the following formula:

V=√(P X R)
or max. working voltage whichever is less

Where

V=Continuous rated DC or
AC (rms) working voltage (V)

P=Rated power (W)

R=Resistance value (Ω)

PACKING METHODS

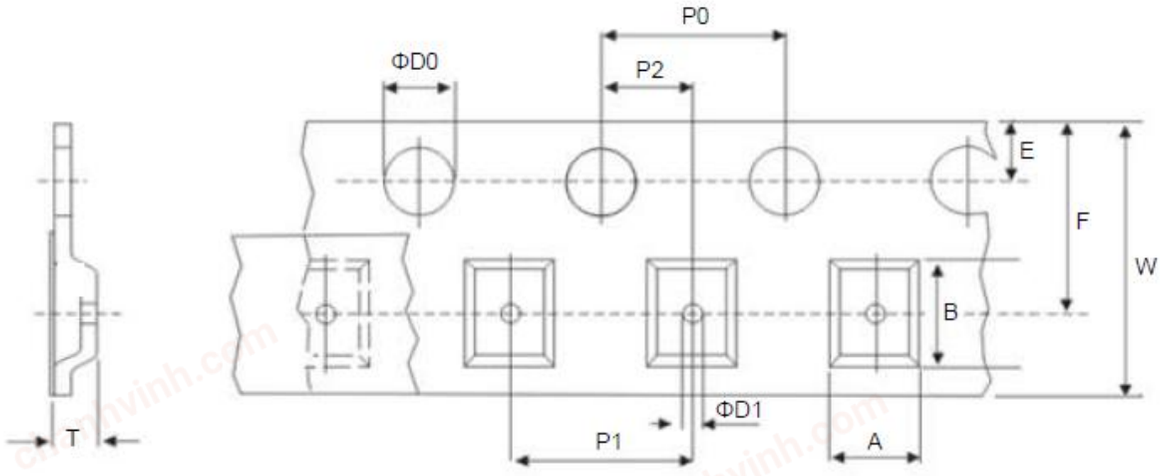

DIMENSIONS Unit: mm

TYPE	A	B	W	E	F	P0	P1	P2	ΨD0	ΨD1	T
MMP100	2.4±0.1	6.3±0.1	12.0±0.2	1.75±0.1	7.5±0.05	4.0±0.1	4.0±0.1	2.0±0.05	1.5±0.1	1.4 Min.	2.50±0.1
MMP200	3.3±0.1	9.0±0.1	16.0±0.3	1.75±0.1	9.5±0.1	4.0±0.1	8.0±0.1	2.0±0.05	1.5±0.1	1.4 Min.	3.30±0.1

chanhvinh.com

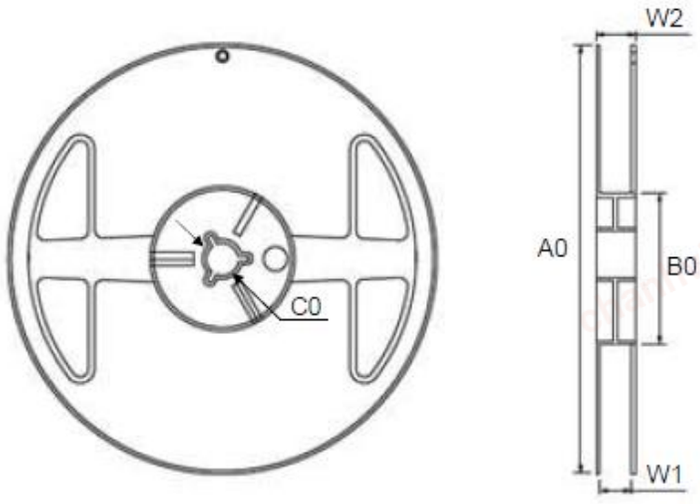

DIMENSIONS

Unit: mm/piece

TYPE	A0	B0	C0	W1	W2	Packaging	Quantity
MMP100	178.5±1.5	60.0±1.0	13.0±0.5	13.0±0.5	15.5±0.5	7”	2,000
MMP200	330.0±1.5	100.0±1.0	13.0±0.5	17.0±0.5	19.0±0.5	13”	2,500

chanhvinh.com

MARKING

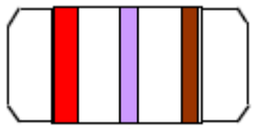

3-BAND-CODE

±2%, ±5%

COLOR	1st BAND	2nd BAND	3rd BAND	MULTIPLIER
BLACK	0	0	0	1Ω
BROWN	1	1	1	10Ω
RED	2	2	2	100Ω
ORANGE	3	3	3	1KΩ
YELLOW	4	4	4	10KΩ
GREEN	5	5	5	100K
BLUE	6	6	6	1MΩ
VIOLET	7	7	7	10MΩ
GREY	8	8	8	0.001Ω
WHITE	9	9	9	0.0001Ω
GOLD				0.1Ω
SILVER				0.01Ω

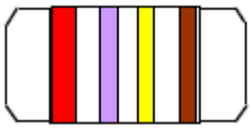

±1%

4-BAND-CODE

chanhvinh.com

REVISION HISTORY

REVISION	DATE	CHANGE NOTIFICATION	DESCRIPTION
Version 3	Nov.3, 2025	-	- Updated marking description
Version 2	Sep.5, 2024	-	- Updated packing methods
Version 1	Aug.31, 2023	-	- Revised LEGAL DISCLAIMER
Version 0	Aug.2, 2021	-	- First issue of this specification

“ Yageo reserves all the rights for revising the content of this datasheet without further notification, as long as the products itse lf are unchanged. Any product change will be announced by PCN.”

chanhvinh.com

LEGAL DISCLAIMER

YAGEO, its distributors and agents (collectively, “YAGEO”), hereby disclaims any and all liabilities for any errors, inaccuracies or incompleteness contained in any product related information, including but not limited to product specifications, datasheets, pictures and/or graphics. YAGEO may make changes, modifications and/or improvements to product related information at any time and without notice.

YAGEO makes no representation, warranty, and/or guarantee about the fitness of its products for any particular purpose or the continuing production of any of its products. To the maximum extent permitted by law, YAGEO disclaims (i) any and all liability arising out of the application or use of any YAGEO product, (ii) any and all liability, including without limitation special, consequential or incidental damages, and (iii) any and all implied warranties, including warranties of fitness for a particular purpose, non -infringement and merchantability.

YAGEO products are designed for general purpose applications under normal operation and usage conditions. Please contact YAGEO for the applications listed below which require especially high reliability for the prevention of defects which might directly cause damage to the third party's life, body or property: Aerospace equipment (artificial satellite, rocket, etc.), Atomic energy-related equipment, Aviation equipment, Disaster prevention equipment, crime prevention equipment, Electric heating apparatus, burning equipment, Highly public information network equipment, data-processing equipment , Medical devices, Military equipment, Power generation control equipment, Safety equipment, Traffic signal equipment, Transportation equipment and Undersea equipment, or for any other application or use in which the failure of YAGEO products could result in personal injury or death, or serious property damage. Particularly **YAGEO Corporation and its affiliates do not recommend the use of commercial or automotive grade products for high reliability applications or manned space flight.**

Information provided here is intended to indicate product specifications only. YAGEO reserves all the rights for revising this content without further notification, as long as products are unchanged. Any product change will be announced by PCN.