chanhvinh.com

Innovative Service Around the Globe YAGEO

DATA SHEET

JUMPER WIRE

Tinned Copper Wire

JPW Series

ø0.5, ø0.6, ø0.7, ø0.8, ø1.0

RoHS compliant & Halogen Free

Product specification – June 12, 2024 V.5



chanhvinh.com



APPLICATIONS

- All general purpose applications

FEATURES

- Suitable for automatic machine insertion
- RoHS compliant & halogen-free

ORDERING INFORMATION

Part number of the tinned copper wires are identified by the series, wire diameter, tolerance, packing, temperature coefficient and forming.

PART NUMBER

JPW	-06	-	T	-	52-
(1)	(2)	(3)	(4)	(5)	(6)

(1) SERIES

JPW Series

(2 Wire Diameter

-05 = 0.5mm
-06 = 0.6mm
-07 = 0.7mm
-08 = 0.8mm
-10 = 1.0mm

(3) TOLERANCE

- = Based on spec.

(4) PACKAGING

R = Reel Pack
T = Box Pack
B = Bulk

(5) TEMPERATURE COEFFICIENT OF RESISTANCE

- = Based on spec.

(6) FORMING

26- = 26mm
52- = 52.4mm
73- = 73mm
M = M-Type Forming
M504 = M type forming, P=5.0±1.0mm, H=4±0.5mm
(For all types please refer to page 6)

Note: 26mm, 52.4mm and 73mm represent dimension A of the axial type, please refer to the category of AXIAL/REEL TAPE SPECIFICATION for the detail.

chanhvinh.com

DIMENSIONS

Unit: mm

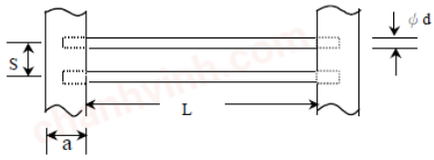

Normal	ψd	L			S	a
JPW-05	0.5 ±0.05	26±1	52.4±1	-		
JPW-06	0.6 ±0.05	26±1	52.4±1	-		
JPW-07	0.7 ±0.05	26±1	52.4±1	73±1.5	5±0.1	6±0.5
JPW-08	0.8 ±0.05	26±1	52.4±1	73±1.5		
JPW-10	1.0 ±0.05	26±1	52.4±1	73±1.5		

ELECTRICAL CHARACTERISTICS

CHARACTERISTICS	JPW	
Material of Jumper Wire	Soft copper wire with tin plating	
Wire Diameter	ø0.5, ø0.6, ø0.7, ø0.8, ø1.0 (±0.05mm)	
Tension Strength	CNS 8938 within 28kg/mm^2	
Extension Rate	CNS 8938 ø0.5 to ø0.6mm	over 24%
	CNS 8938 ø0.7 to ø1.0mm	over 26%
Conductivity	ø0.5mm	Minmum 94%
	ø0.6 to ø1.0mm	Minimum 96%
Twisting Strength	CNS 8938 ψ0.5 mm	Load 250 g 3 cycles
	CNS 8938 ψ0.6 ~ψ0.8 mm	Load 500 g 3 cycles
	CNS 8938 ψ1.0 mm	Load 1.0kg 3 cycles
Solderability	245°C ± 5°C , 5 ± 0.5 sec. Coverage 95% Min	
Element of Plating	Tin Minimum 99.9%	
Thickness of Plating	4±1μm	
Current Rating	ø0.5mm	6 AMPS at 70°C
	ø0.6mm	7.5 AMPS at 70°C
	ø0.7mm	8.5 AMPS at 70°C
	ø0.8mm	10 AMPS at 70°C
	ø1.0mm	15 AMPS at 70°C
Appearance	Smooth and shining	

chanhvinh.com

TAPE ON REEL PACKING

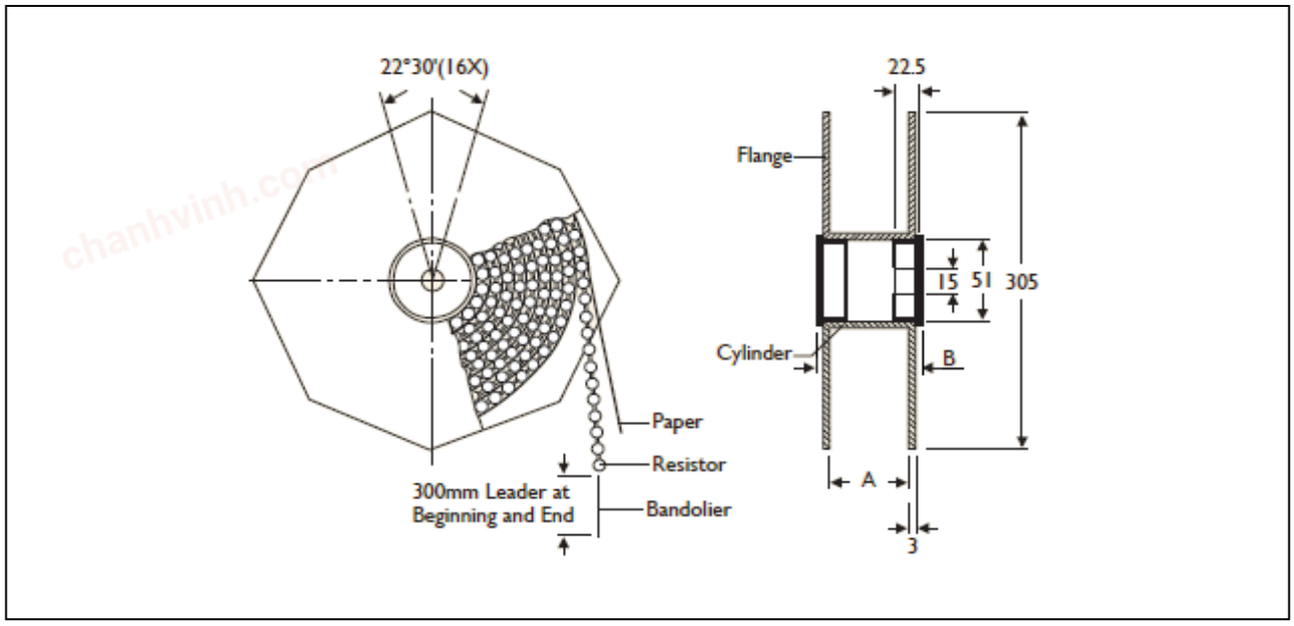

TYPE — Unit: mm/piece

Normal	Across Flange(A)	B	Quantity Per Reel
JPW-05	66.5	75.5	10,000
JPW-06	66.5	75.5	10,000
JPW-07	66.5	75.5	10,000
JPW-07	87	96	10,000
JPW-08	66.5	75.5	10,000
JPW-08	87	96	10,000
JPW-10	66.5	75.5	5,000
JPW-10	87	96	5,000

chanhvinh.com

TAPE ON BOX PACKING

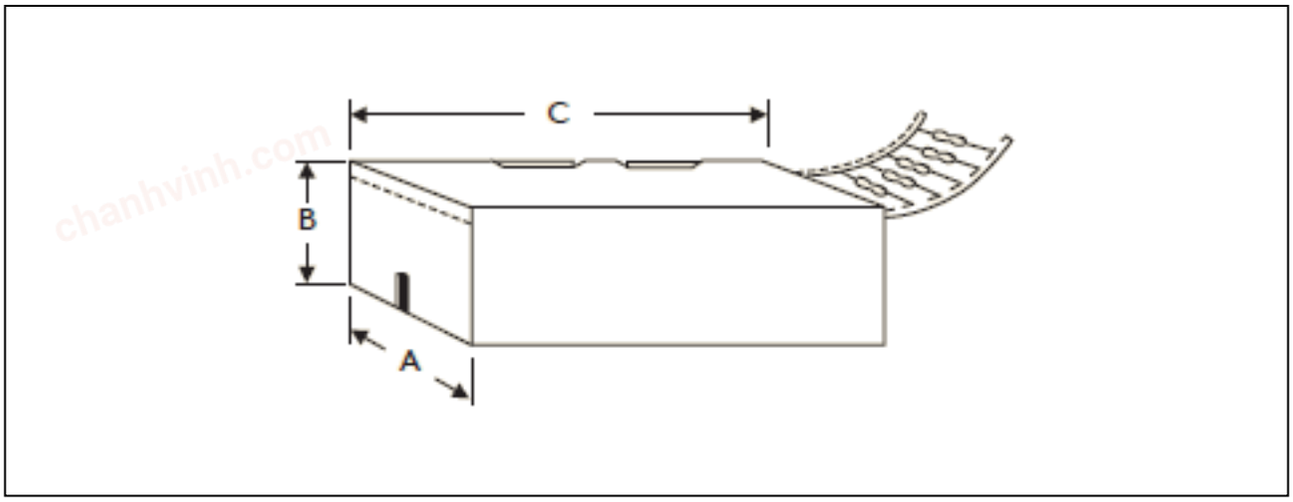

Unit: mm/piece

Normal	A	B	C	Quantity Per Box
JPW-05	48	68	255	5,000
JPW-05	78	115	260	10,000
JPW-06	48	68	255	5,000
JPW-06	78	115	260	10,000
JPW-07	48	68	255	5,000
JPW-07	78	115	260	10,000
JPW-08	48	68	255	5,000
JPW-08	81	70	260	5,000
JPW-10	48	68	255	5,000
JPW-10	81	70	260	5,000

BULK PACKING

Normal	Piece/Per Inner Box	Bag/Per Inner Box	Piece Per Bag
JPW-05	10,000	10	1,000
JPW-06	10,000	10	1,000
JPW-07	10,000	10	1,000
JPW-08	10,000	10	1,000
JPW-10	10,000	10	1,000

chanhvinh.com

FORMING

M TYPE

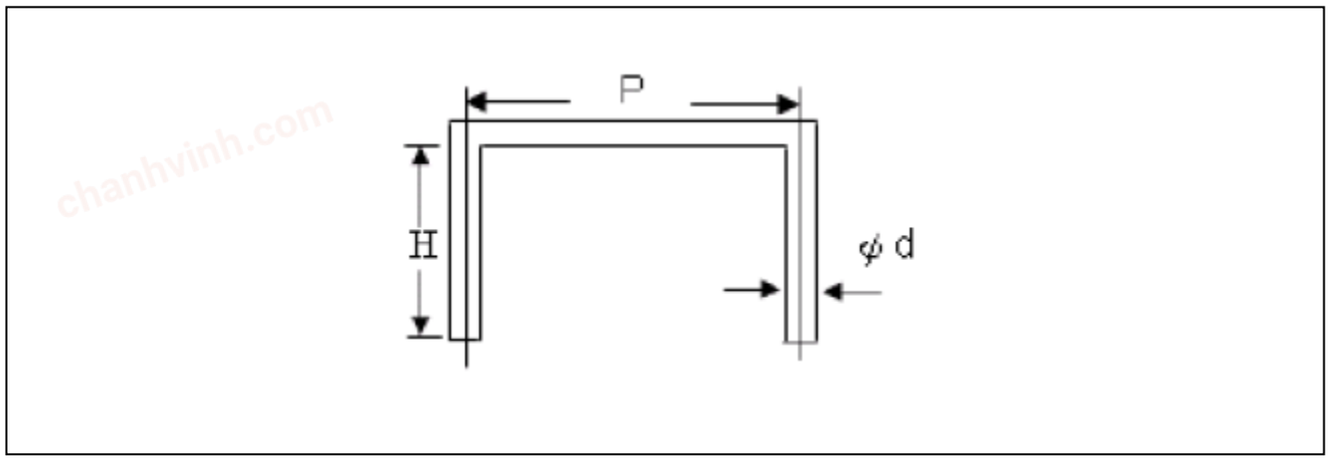

TYPE DIMENSIONS Unit: mm

Normal	ψd	P	H	Forming code
JPW-05	0.5±0.05	5.0±1.0	4.0±0.5	M504
JPW-06	0.6±0.05	5.0±1.0	10.0±1.0	M5010
		5.0±1.0	4.0±0.5	M504
		8.0±1.0	4.0±0.5	M804
		7.5±1.0	10.0±0.5	M75010
		14.0±1.0	3.5±1.0	M14035
		16.5±1.0	3.5±1.0	M165035
JPW-07	0.7±0.05			
JPW-08	0.8±0.05			
JPW-10	1.0±0.05			

chanhvinh.com

REVISION HISTORY

REVISION	DATE	CHANGE NOTIFICATION	DESCRIPTION
Version 5	Jun.11,2024	-	- Revised the current rating from ø10mm to ø1.0mm
Version 4	Apr.2, 2024	-	- Added forming code description for part number
Version 3	Sep.5, 2023	-	- Update legal disclaimer and footer version numbers
Version 2	Apr. 6, 2022		- Update M75010 forming code
Version 1	Mar.10, 2022		-Add M14035& M165035 forming code
Version 0	Aug.2, 2021	-	- First issue of this specification

" Yageo reserves all the rights for revising the content of this datasheet without further notification, as long as the products itse lf are unchanged. Any product change will be announced by PCN."

chanhvinh.com

LEGAL DISCLAIMER

YAGEO, its distributors and agents (collectively, “YAGEO”), hereby disclaims any and all liabilities for any errors, inaccuracies or incompleteness contained in any product related information, including but not limited to product specifications, datasheets, pictures and/or graphics. YAGEO may make changes, modifications and/or improvements to product related information at any time and without notice.

YAGEO makes no representation, warranty, and/or guarantee about the fitness of its products for any particular purpose or the continuing production of any of its products. To the maximum extent permitted by law, YAGEO disclaims (i) any and all liability arising out of the application or use of any YAGEO product, (ii) any and all liability, including without limitation special, consequential or incidental damages, and (iii) any and all implied warranties, including warranties of fitness for a particular purpose, non -infringement and merchantability.

YAGEO products are designed for general purpose applications under normal operation and usage conditions. Please contact YAGEO for the applications listed below which require especially high reliability for the prevention of defects which might directly cause damage to the third party's life, body or property: Aerospace equipment (artificial satellite, rocket, etc.), Atomic energy-related equipment, Aviation equipment, Disaster prevention equipment, crime prevention equipment, Electric heating apparatus, burning equipment, Highly public information network equipment, data-processing equipment , Medical devices, Military equipment, Power generation control equipment, Safety equipment, Traffic signal equipment, Transportation equipment and Undersea equipment, or for any other application or use in which the failure of YAGEO products could result in personal injury or death, or serious property damage. Particularly **YAGEO Corporation and its affiliates do not recommend the use of commercial or automotive grade products for high reliability applications or manned space flight.**

Information provided here is intended to indicate product specifications only. YAGEO reserves all the rights for revising this content without further notification, as long as products are unchanged. Any product change will be announced by PCN.