chanhvinh.com

Innovative Service Around the Globe YAGEO

DATA SHEET

SURFACE-MOUNT CERAMIC MULTILAYER CAPACITORS

Soft termination

NPO and X7R

16V TO 3KV

0.47pF to 2.2 uF

RoHS compliant & Halogen Free



YAGEO

Product Specification – December 8, 2025 V.9



chanhvinh.com

SCOPE

This specification describes X7R series chip capacitors with Flexible leadfree terminations.

APPLICATIONS

- High flexure stress circuit boards
- Switch power supplies
- Telecom base station

FEATURES

- Supplied in tape on reel
- Flexible termination system
- Leaded-free termination meet RoHS requirements
- Improved resistance to thermal stresses
- Increased mechanical performance
- MSL class: level 1

ORDERING INFORMATION - GLOBAL PART NUMBER

All part numbers are identified by the series, size, tolerance, TC material, packing style, voltage, process code, termination and capacitance value.

YAGEO ordering code

GLOBAL PART NUMBER (PREFERRED)

CS	XXXX	X	X	X7R	X	BX	XXX
	(1)	(2)	(3)		(4)	(5)	(6)

(1) SIZE – INCH BASED (METRIC)

0402 (1005)	1206 (3216)
0603 (1608)	1210 (3225)
0805 (2012)	1808 (4520)
	1812 (4532)

(2) TOLERANCE

G = ±2% (1)
J = ±5% (2)
K = ±10%
M = ±20%

(3) PACKING STYLE

R = Paper/PE taping reel; Reel 7 inch
K = Blister taping reel; Reel 7 inch
P = Paper/PE taping reel; Reel 13 inch
F = Blister taping reel; Reel 13 inch

(4) RATED VOLTAGE

7 = 16 V	Y = 250 V
8 = 25 V	B = 500 V
9 = 50 V	Z = 630 V
0 = 100 V	C = 1 kV
A = 200 V	D = 2 kV
	E = 3 kV

(5) PROCESS

N = NP0
B = Class 2 MLCC

(6) CAPACITANCE VALUE

2 significant digits+number of zeros
The 3rd digit signifies the multiplying factor, and letter R is decimal point
Example: 103 = 10×10^3 = 10,000 pF = 10 nF

NOTE

1. Tolerance ±2% doesn't available for full NPO product range, please contact local sales force before order.
2. Tolerance ±5% doesn't available for full X7R product range, please contact local sales force before order.

chanhvinh.com

CONSTRUCTION

The capacitor consists of a rectangular block of ceramic dielectric in which a number of interleaved metal electrodes are contained. This structure gives rise to a high capacitance per unit volume.

The inner electrodes are connected to the two end flexible terminations and finally covered with a layer of plated tin (NiSn).

The terminations are lead-free. A cross section of the structure is shown in Fig.1 and Fig.2.

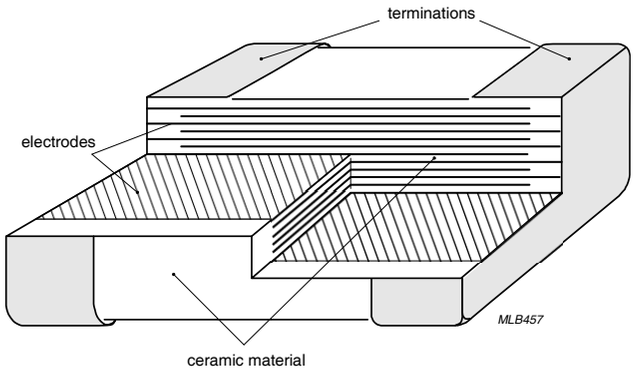

Fig. 1 Surface mounted multilayer ceramic capacitor construction

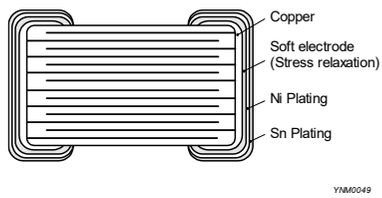

Fig. 2 Concept of soft termination

DIMENSION

Table 1 For outlines see fig. 3

TYPE	LI (mm)	W (mm)	T (mm)	L2/L3(mm) min	L2/L3(mm) max	L4(mm) min	Dimension code
0402	1.0 ± 0.15	0.5 ± 0.15	0.50 ± 0.15	0.10	0.35	0.30	CA
0603	1.6 ± 0.20	0.8 ± 0.15	0.80 ± 0.15	0.20	0.65	0.50	DA
	1.6 ± 0.25	0.8 ± 0.25	0.80 ± 0.25	0.20	0.85	0.20	DB
0805	2.0 ± 0.3	1.25 ± 0.2	0.60 ± 0.15	0.25	0.75	0.70	EA
			0.85 ± 0.15				EB
			1.25 ± 0.20				EC
		1.25 ± 0.25	1.25 ± 0.25	0.25	0.85	0.50	ED
1206	3.2 ± 0.4	1.6 ± 0.2	0.60 ± 0.15	0.25	0.85	1.50	FA
			0.85 ± 0.15				FB
			1.15 ± 0.20				FC
			1.25 ± 0.20				FD
			1.60 ± 0.20				FE
		1.6 ± 0.3	1.60 ± 0.30	0.25	1.00	1.20	FF
1210	3.2 ± 0.5	2.5 ± 0.3	0.85 ± 0.20	0.25	0.85	1.40	GA
			1.15 ± 0.30				GB
			1.25 ± 0.20				GC
			1.25 ± 0.30				GD
			1.60 ± 0.30				GE
			2.00 ± 0.30				GF
			2.5 ± 0.3	0.25	1.0	1.2	GG
	3.2 ± 0.5	2.5 ± 0.35	2.0 ± 0.35	0.25	1.0	1.2	GH
	3.2 ± 0.5	2.5 ± 0.35	2.5 ± 0.35	0.25	1.0	1.2	GI
1808	4.5+0.6/-0.4	2.0 ± 0.4	1.25 ± 0.20	0.25	0.85	2.20	HA
			1.35 ± 0.40				HB
			1.60 ± 0.20				HC
			1.60 ± 0.40				HD
			2.00 ± 0.40				HE
1812	4.5+0.6/-0.4	3.2 ± 0.4	0.85 ± 0.30	0.25	0.85	2.20	IA
			1.15 ± 0.40				IB
			1.25 ± 0.20				IC
			1.25 ± 0.40				ID
			1.35 ± 0.40				IE
			1.60 ± 0.40				IF

OUTLINES

For dimension see Table 1

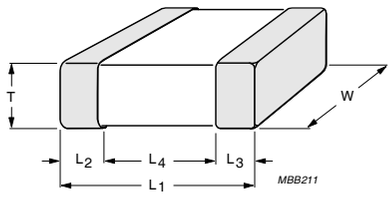

Fig. 3 Surface mounted multilayer ceramic capacitor dimension

chanhvinh.com

CAPACITANCE RANGE & THICKNESS

Table 2 NPO / 0402 to 0805

CAP.	0402		0603			0805					
	50V	100V	50V	100V	250V	50V	100V	250V	500V	630V	1000V
0.47 pF	CA	CA	DA	DA	DA	EA	EA	EA	EA		
0.56 pF	CA	CA	DA	DA	DA	EA	EA	EA	EA		
0.68 pF	CA	CA	DA	DA	DA	EA	EA	EA	EA		
0.82 pF	CA	CA	DA	DA	DA	EA	EA	EA	EA		
1 pF	CA	CA	DA	DA	DA	EA	EA	EA	EA		
1.2 pF	CA	CA	DA	DA	DA	EA	EA	EA	EA		
1.5 pF	CA	CA	DA	DA	DA	EA	EA	EA	EA		
1.8 pF	CA	CA	DA	DA	DA	EA	EA	EA	EA		
2.2 pF	CA	CA	DA	DA	DA	EA	EA	EA	EA		
2.7 pF	CA	CA	DA	DA	DA	EA	EA	EA	EA		
3.3 pF	CA	CA	DA	DA	DA	EA	EA	EA	EA		
3.9 pF	CA	CA	DA	DA	DA	EA	EA	EA	EA		
4.7 pF	CA	CA	DA	DA	DA	EA	EA	EA	EA		
5.6 pF	CA	CA	DA	DA	DA	EA	EA	EA	EA		
6.8 pF	CA	CA	DA	DA	DA	EA	EA	EA	EA		
8.2 pF	CA	CA	DA	DA	DA	EA	EA	EA	EA		
10 pF	CA	CA	DA	DA	DA	EA	EA	EA	EA	EA	EB
12 pF	CA	CA	DA	DA	DA	EA	EA	EA	EA	EA	EB
15 pF	CA	CA	DA	DA	DA	EA	EA	EA	EA	EA	EB
18 pF	CA	CA	DA	DA	DA	EA	EA	EA	EA	EA	EB
22 pF	CA	CA	DA	DA	DA	EA	EA	EA	EA	EA	EB
27 pF	CA	CA	DA	DA	DA	EA	EA	EA	EA	EA	EB
33 pF	CA	CA	DA	DA	DA	EA	EA	EA	EA	EA	EB
39 pF	CA	CA	DA	DA	DA	EA	EA	EA	EA	EA	EB
47 pF	CA	CA	DA	DA	DA	EA	EA	EA	EA	EA	EB
56 pF	CA	CA	DA	DA	DA	EA	EA	EA	EA	EA	EC
68 pF	CA	CA	DA	DA	DA	EA	EA	EA	EA	EA	EC
82 pF	CA	CA	DA	DA	DA	EA	EA	EA	EA	EA	EC
100 pF	CA	CA	DA	DA	DA	EA	EA	EA	EA	EA	
Tape width						8 mm					

NOTE

1. Values in shaded cells indicate thickness class in mm
2. Capacitance value of non E-12 series is on request
3. For product with 2% tolerance, please contact local sales force before ordering

chanhvinh.com

CAPACITANCE RANGE & THICKNESS

Table 3 NPO / 0402 to 0805

CAP.	0402		0603			0805					
	50V	100V	50V	100V	250V	50V	100V	250V	500V	630V	1000V
120 pF	CA	CA	DA	DA	DA	EA	EA	EA	EA	EA	
150 pF	CA	CA	DA	DA	DA	EA	EA	EA	EA	EA	
180 pF	CA		DA	DA	DA	EA	EA	EA	EA	EA	
220 pF	CA		DA	DA	DA	EA	EA	EB	EB	EB	
270 pF	CA		DA	DA	DA	EA	EA	EB	EB	EB	
330 pF	CA		DA	DA	DA	EA	EA	EB	EB	EB	
390 pF	CA		DA	DA	DA	EA	EA	EB	EB	EB	
470 pF	CA		DA	DA	DA	EA	EA	EB	EB	EB	
560 pF			DA	DA	DA	EA	EA	EB	EC	EC	
680 pF			DA	DA	DA	EA	EA	EB	EC	EC	
820 pF			DA	DA		EA	EA	EB	EC	EC	
1.0 nF			DA	DA		EA	EA	EB	EC	EC	
1.2 nF			DA			EB	EB	EC			
1.5 nF			DA			EB	EB	EC			
1.8 nF			DA			EB	EB	EC			
2.2 nF			DA			EC	EC	EC			
2.7 nF			DA			EC	EC	EC			
3.3 nF			DA			EC	EC	EC			
3.9 nF						EC	EC	EC			
4.7 nF						EC	EC	EC			
5.6 nF						EC	EC				
6.8 nF						EC	EC				
8.2 nF						EC	EC				
10 nF						EC	EC				
Tape width						8 mm					

NOTE

1. Values in shaded cells indicate thickness class in mm
2. Capacitance value of non E-12 series is on request
3. For product with 2% tolerance, please contact local sales force before ordering

chanhvinh.com

CAPACITANCE RANGE & THICKNESS

Table 4 NPO / 1206 to 1210

CAP.	1206								1210						
	50V	100V	250V	500V	630V	1000V	2000V	3000V	50V	100V	250V	500V	630V	1000V	2000V
0.47 pF	FA	FA	FA												
0.56 pF	FA	FA	FA												
0.68 pF	FA	FA	FA												
0.82 pF	FA	FA	FA												
1 pF	FA	FA	FA												
1.2 pF	FA	FA	FA												
1.5 pF	FA	FA	FA												
1.8 pF	FA	FA	FA												
2.2 pF	FA	FA	FA	FA											
2.7 pF	FA	FA	FA	FA											
3.3 pF	FA	FA	FA	FA											
3.9 pF	FA	FA	FA	FA											
4.7 pF	FA	FA	FA	FA											
5.6 pF	FA	FA	FA	FA											
6.8 pF	FA	FA	FA	FA											
8.2 pF	FA	FA	FA	FA											
10 pF	FA	FA	FA	FA	FD	FD	FD	FD							
12 pF	FA	FA	FA	FA	FD	FD	FD	FD							
15 pF	FA	FA	FA	FA	FD	FD	FD	FD							
18 pF	FA	FA	FA	FA	FD	FD	FD	FD							
22 pF	FA	FA	FA	FA	FD	FD	FD	FD							
27 pF	FA	FA	FA	FA	FD	FD	FD	FD							
33 pF	FA	FA	FA	FA	FD	FD	FD	FD					GC	GC	GC
39 pF	FA	FA	FA	FA	FD	FD	FD	FD					GC	GC	GC
47 pF	FA	FA	FA	FA	FD	FD	FD	FD	GC	GC	GC	GC	GC	GC	GC
56 pF	FA	FA	FA	FA	FD	FD	FD		GC	GC	GC	GC	GC	GC	GC
68 pF	FA	FA	FA	FA	FD	FD	FD		GC	GC	GC	GC	GC	GC	GC
82 pF	FA	FA	FA	FA	FD	FD	FD		GC	GC	GC	GC	GC	GC	GC
100 pF	FA	FA	FA	FA	FD	FD	FD		GC	GC	GC	GC	GC	GC	GC
Tape width															

chanhvinh.com

CAPACITANCE RANGE & THICKNESS

Table 5 NPO / 1206 to 1210

CAP.	1206							1210						
	50V	100V	250V	500V	630V	1000V	2000V	50V	100V	250V	500V	630V	1000V	2000V
120 pF	FA	FA	FA	FA	FD	FD	FD	GC	GC	GC	GC	GC	GC	GC
150 pF	FA	FA	FA	FA	FD	FD	FD	GC	GC	GC	GC	GC	GC	GC
180 pF	FA	FA	FA	FA	FD	FD	FD	GC	GC	GC	GC	GC	GC	GC
220 pF	FA	FA	FA	FA	FD	FD	FD	GC	GC	GC	GC	GC	GC	GC
270 pF	FA	FA	FA	FA	FD	FD		GC	GC	GC	GC	GC	GC	
330 pF	FA	FA	FA	FA	FD	FD		GC	GC	GC	GC	GC	GC	
390 pF	FA	FA	FA	FA	FD	FD		GC	GC	GC	GC	GC	GC	
470 pF	FA	FA	FA	FA	FD	FD		GC	GC	GC	GC	GC	GC	
560 pF	FA	FA	FA	FA	FD	FD		GC	GC	GC	GC	GC	GC	
680 pF	FA	FA	FA	FA	FD	FD		GC	GC	GC	GC	GC	GC	
820 pF	FA	FA	FB	FB	FD	FD		GC	GC	GC	GC	GC	GC	
1.0 nF	FA	FA	FB	FB	FD	FD		GC	GC	GC	GC	GC	GC	
1.2 nF	FA	FA	FB	FB	FD			GC	GC	GC	GC			
1.5 nF	FA	FA	FB	FB	FD			GC	GC	GC	GC			
1.8 nF	FA	FA	FD	FD	FD			GC	GC	GC	GC			
2.2 nF	FA	FA	FD	FD	FD			GC	GC	GC	GC		GH	
2.7 nF	FA	FA	FD					GC	GC	GC	GC		GH	
3.3 nF	FB	FB	FD					GC	GC	GC	GC		GH	
3.9 nF	FB	FB	FD					GC	GC	GC	GC		GH	
4.7 nF	FB	FB						GC	GC	GC	GC		GH	
5.6 nF	FB	FB						GC	GC				GH	
6.8 nF	FB	FB						GC	GC				GH	
8.2 nF	FD	FD						GC	GC				GH	
10 nF	FD	FD						GC	GC				GI	
12 nF													GI	
22 nF													GI	
33 nF													GI	
Tape width	8 mm													

chanhvinh.com

CAPACITANCE RANGE & THICKNESS

Table 6 NPO / 1808 to 1812

CAP.	1808			1812						
	1000V	2000V	3000V	100V	250V	500V	630V	1000V	2000V	3000V
10 pF			HC					IC	IC	IC
12 pF			HC					IC	IC	IC
15 pF			HC					IC	IC	IC
18 pF			HC					IC	IC	IC
22 pF			HC					IC	IC	IC
27 pF			HC					IC	IC	IC
33 pF	HA	HA	HC					IC	IC	IC
39 pF	HA	HA	HC					IC	IC	IC
47 pF	HA	HA	HC					IC	IC	IC
56 pF	HA	HA	HC	IC	IC	IC	IC	IC	IC	IC
68 pF	HA	HA	HC	IC	IC	IC	IC	IC	IC	IC
82 pF	HA	HA	HC	IC	IC	IC	IC	IC	IC	IC
100 pF	HA	HA	HC	IC	IC	IC	IC	IC	IC	IC
120 pF	HA	HA		IC	IC	IC	IC	IC	IC	IC
150 pF	HA	HA		IC	IC	IC	IC	IC	IC	IC
180 pF	HA	HA		IC	IC	IC	IC	IC	IC	IC
220 pF	HA	HA		IC	IC	IC	IC	IC	IC	IC
270 pF	HA	HA		IC	IC	IC	IC	IC	IC	
330 pF	HA	HA		IC	IC	IC	IC	IC	IC	
390 pF	HA	HA		IC	IC	IC	IC	IC	IC	
470 pF	HA	HA		IC	IC	IC	IC	IC		
560 pF	HA	HA		IC	IC	IC	IC	IC		
680 pF				IC	IC	IC	IC	IC		
820 pF				IC	IC	IC	IC	IC		
1.0 nF				IC	IC	IC	IC	IC		
1.2 nF				IC	IC	IC	IC	IC		
1.5 nF				IC	IC	IC	IC	IC		
1.8 nF				IC	IC	IC				
2.2 nF				IC	IC	IC				
2.7 nF				IC	IC	IC				
3.3 nF				IC	IC	IC				
3.9 nF				IC	IC	IC				
4.7 nF				IC	IC	IC				
5.6 nF				IC						
6.8 nF				IC						
8.2 nF				IC						
10 nF				IC						
12 nF				IC						
15 nF				IC						
18 nF				IC						
22 nF				IC						
27 nF										
33 nF										
Tape Width	12 mm									

NOTE

1. Values in shaded cells indicate thickness class in mm
2. Capacitance value of non E-12 series is on request
3. For product with 2% tolerance, please contact local sales force before ordering

chanhvinh.com

CAPACITANCE RANGE & THICKNESS

Table 7 X7R / 0402 to 0805

CAP.	0402				0603					0805							
	16V	25V	50V	100V	16V	25V	50V	100V	250V	16V	25V	50V	100V	250V	500V	630V	1000V
100 pF	CA	CA	CA	CA	DA	DA	DA	DA	DA								
150 pF	CA	CA	CA	CA	DA	DA	DA	DA	DA	EA	EA	EA	EA	EB	EB	EB	EB
220 pF	CA	CA	CA	CA	DA	DA	DA	DA	DA	EA	EA	EA	EA	EB	EB	EB	EB
330 pF	CA	CA	CA	CA	DA	DA	DA	DA	DA	EA	EA	EA	EA	EB	EB	EB	EB
470 pF	CA	CA	CA	CA	DA	DA	DA	DA	DA	EA	EA	EA	EA	EB	EB	EB	EB
680 pF	CA	CA	CA	CA	DA	DA	DA	DA	DA	EA	EA	EA	EA	EB	EB	EB	EB
1.0 nF	CA	CA	CA	CA	DA	DA	DA	DA	DA	EA	EA	EA	EA	EB	EB	EB	EB
1.5 nF	CA	CA	CA	CA	DA	DA	DA	DA	DA	EA	EA	EA	EA	EB	EB	EB	
2.2 nF	CA	CA	CA	CA	DA	DA	DA	DA	DA	EA	EA	EA	EA	EB	EB	EB	
3.3 nF	CA	CA	CA	CA	DA	DA	DA	DA		EA	EA	EA	EA	EB	EB	EB	
4.7 nF	CA	CA	CA	CA	DA	DA	DA	DA		EA	EA	EA	EA	EB	EB	EB	
6.8 nF	CA	CA	CA	CA	DA	DA	DA	DA		EA	EA	EA	EA	EC	EB	EB	
10 nF	CA	CA	CA	CA	DA	DA	DA	DA		EA	EA	EA	EA	EC	EC	EC	
15 nF	CA	CA	CA		DA	DA	DA	DA		EA	EA	EA	EB	EC	EC		
22 nF	CA	CA	CA		DA	DA	DA	DA		EA	EA	EA	EB	EC	EC		
33 nF	CA	CA	CA		DA	DA	DA	DA		EB	EB	EB	EC				
47 nF	CA	CA	CA		DA	DA	DA	DA		EB	EB	EB	EC				
68 nF	CA	CA			DA	DA	DA	DA		EB	EB	EB	EC				
100 nF	CA	CA			DA	DA	DA	DA		EB	EB	EB	EC				
150 nF					DA	DA	DA			EC	EC	EC					
220 nF					DA	DA	DA			EC	EC	EC					
330 nF					DA	DA				EC	EC	EC					
470 nF					DA	DA				EC	EC	EC					
680 nF					DA					EC	EC	EC					
1000 nF					DA	DA				EC	EC	EC					
2.2 µF										EC	ED						
4.7 µF										ED							
Tape width	8 mm																

NOTE

1. Values in shaded cells indicate thickness class in mm
2. Capacitance value of non E-6 series is on request
3. For product with 5% tolerance, please contact local sales force before ordering

chanhvinh.com

CAPACITANCE RANGE & THICKNESS

Table 8 X7R / 1206 to 1210

CAP.	1206									1210								
	16V	25V	50V	100V	200/250V	500V	630V	1000V	2000V	16V	25V	50V	100V	250V	500V	630V	1000V	2000V
100 pF																		
150 pF																		
220 pF	FB	FB	FB	FB	FB	FD	FD	FD	FD									
330 pF	FB	FB	FB	FB	FB	FD	FD	FD	FD									
470 pF	FB	FB	FB	FB	FB	FD	FD	FD	FD								GD	GD
680 pF	FB	FB	FB	FB	FB	FD	FD	FD	FD								GD	GD
1.0 nF	FB	FB	FB	FB	FB	FD	FD	FD	FD								GD	GD
1.5 nF	FB	FB	FB	FB	FB	FD	FD	FD	FD								GD	GD
2.2 nF	FB	FB	FB	FB	FB	FD	FD	FD		GA	GA	GA	GA	GA			GD	GE
3.3 nF	FB	FB	FB	FB	FB	FD	FD	FD		GA	GA	GA	GA	GA	GD	GD	GD	
4.7 nF	FB	FB	FB	FB	FB	FD	FD	FD		GA	GA	GA	GA	GA	GD	GD	GD	
6.8 nF	FB	FB	FB	FB	FB	FD	FD	FD		GA	GA	GA	GA	GA	GD	GD	GD	
10 nF	FB	FB	FB	FB	FB	FD	FD	FD		GA	GA	GA	GA	GA	GD	GD	GD	
15 nF	FB	FB	FB	FB	FB	FD	FD			GA	GA	GA	GA	GA	GD	GD	GD	
22 nF	FB	FB	FB	FB	FD	FE	FE			GA	GA	GA	GA	GD	GD	GE	GE	
33 nF	FB	FB	FB	FB	FD	FE	FE			GA	GA	GA	GA	GD	GD			
47 nF	FB	FB	FB	FB	FD					GA	GA	GA	GA	GD	GD			
68 nF	FB	FB	FB	FD	FD					GA	GA	GA	GA	GD				
100 nF	FB	FB	FB	FD	FE					GA	GA	GA	GA	GD				
150 nF	FB	FB	FC	FD						GA	GA	GB	GD	GD				
220 nF	FB	FB	FC	FD						GA	GA	GB	GD	GD				
330 nF	FE	FE	FE	FE						GA	GA	GB	GD					
470 nF	FE	FE	FE	FE						GB	GB	GD	GD					
680 nF	FC	FC	FF	FF						GB	GB	GD	GF					
1000 nF	FC	FC	FF	FF						GD	GD	GD	GF					
2.2 µF	FC	FC	FF	FF						GG	GG	GG	GG					
4.7 µF	FF	FF								GG	GG	GG						
10 µF	FF	FF								GG	GG	GG						
Tape width										8 mm								

NOTE

1. Values in shaded cells indicate thickness class in mm
2. Capacitance value of non E-6 series is on request
3. For product with 5% tolerance, please contact local sales force before ordering

chanhvinh.com

CAPACITANCE RANGE & THICKNESS

Table 9 X7R / 1808 to 1812

CAP.	1808			1812						
	1000V	2000V	3000V	50V	100V	250V	500V	630V	1000V	2000V
100 pF										
150 pF										
220 pF										
330 pF	HB	HB	HD							
470 pF	HB	HB	HD							
680 pF	HB	HB	HD							
1.0 nF	HB	HB	HE							
1.5 nF	HB	HB	HE							
2.2 nF	HB	HD		IA	IA	IA	ID	IE	IE	IE
3.3 nF	HB			IA	IA	IA	ID	IE	IE	IE
4.7 nF	HB			IA	IA	IA	ID	IE	IE	IE
6.8 nF	HD			IA	IA	IA	ID	IE	IE	
10 nF	HD			IA	IA	IA	ID	IE	IE	
15 nF				IA	IA	IA	ID	IE	IE	
22 nF				IA	IA	IA	ID	IE	IE	
33 nF				IA	IA	IA	ID	IF	IF	
47 nF				IA	IA	ID	ID			
68 nF				IA	IA	ID	ID			
100 nF				IB	ID	ID	IF			
150 nF				IB	ID	ID				
220 nF				IB	ID	IF				
330 nF				IB	ID	IF				
470 nF				IB	IF	IF				
680 nF				IF	IF					
1000 nF				IF	IF					
2.2 µF										
Tape width	12 mm									

NOTE

1. Values in shaded cells indicate thickness class in mm
2. Capacitance value of non E-6 series is on request
3. For product with 5% tolerance, please contact local sales force before ordering

chanhvinh.com

THICKNESS CLASSES AND PACKING QUANTITY

Table 10

SIZE CODE	THICKNESS CLASSIFICATION	TAPE WIDTH QUANTITY PER REEL	Ø180 MM / 7 INCH		Ø180 MM / 13 INCH	
			PAPER	BLISTER	PAPER	BLISTER
0402	0.50 ± 0.15	8mm	10,000	--	50,000	--
0603	0.80 ± 0.15	8mm	4,000	--	15,000	--
0805	0.60 ± 0.15	8mm	4,000	--	20,000	--
	0.85 ± 0.15	8mm	4,000	--	15,000	--
	1.25 ± 0.20	8mm	--	3,000	--	10,000
1206	0.60 ± 0.15	8mm	4,000	--	20,000	--
	0.85 ± 0.15	8mm	4,000	--	15,000	--
	1.15 ± 0.20	8mm	--	3,000	--	10,000
	1.25 ± 0.20	8mm	--	3,000	--	10,000
	1.60 ± 0.20	8mm	--	2,000	--	8,000
	1.60 ± 0.30	8mm	--	2,000	--	8,000
1210	0.85 ± 0.20	8mm	--	4,000	--	10,000
	1.15 ± 0.30	8mm	--	3,000	--	10,000
	1.25 ± 0.20	8mm	--	3,000	--	10,000
	1.25 ± 0.30	8mm	--	3,000	--	10,000
	1.60 ± 0.30	8mm	--	2,000	--	5,000
	2.00 ± 0.30	8mm	--	2,000	--	--
	2.50 ± 0.20	8mm	--	1,000	--	--
1808	1.25 ± 0.20	12mm	--	2,000	--	--
	1.35 ± 0.40	12mm	--	2,000	--	--
	1.60 ± 0.20	12mm	--	2,000	--	--
	1.60 ± 0.40	12mm	--	2,000	--	--
	2.00 ± 0.40	12mm	--	2,000	--	--
1812	0.85 ± 0.30	12mm	--	2,000	--	--
	1.15 ± 0.40	12mm	--	1,000	--	--
	1.25 ± 0.20	12mm	--	1,000	--	--
	1.25 ± 0.40	12mm	--	1,000	--	--
	1.35 ± 0.40	12mm	--	1,000	--	--
	1.60 ± 0.40	12mm	--	1,000	--	--

ELECTRICAL CHARACTERISTICS

X7R DIELECTRIC CAPACITORS; NISN TERMINATIONS

Unless otherwise specified, all test and measurements shall be made under standard atmospheric conditions for testing as given in 5.3 of IEC 60068-1:

- Temperature: 15 ° C to 35 ° C
- Relative humidity: 25% to 75%
- Air pressure: 86 kPa to 106 kPa

Before the measurements are made, the capacitor shall be stored at the measuring temperature for a time sufficient to allow the entire capacitor to reach this temperature.

The period as prescribed for recovery at the end of a test is normally sufficient for this purpose.

chanhvinh.com

Table 11

DESCRIPTION								VALUE
Capacitance range								100 pF to 2.2μF
Dissipation factor (D.F.)								
NPO	C < 30 pF							≤ 1 / (400 + 20C)
	C ≥ 30 pF							≤ 0.1 %
X7R	0402	0603	0805	1206	1210	1808	1812	
16V	100pF to 22nF	100pF to 220nF	150pF to 470nF	220pF to 1μF	2.2nF to 1μF			≤ 3.5%
	27nF to 100nF		680 nF to 2.2μF	2.2μF				≤ 5%
		330nF to 1uF	4.7μF	4.7μF to 10μF	2.2μF to 10μF			≤ 10%
25V	100pF to 10nF	100pF to 39nF	150pF to 180nF	220pF to 680nF	2.2nF to 1μF			≤ 2.5%
	12 nF to 47nF	47nF to 220nF	220nF to 470nF	1μF				≤ 3.5%
	56nF to 100nF		680nF to 1μF	2.2μF				≤ 5%
		330nF to 1μF	2.2μF	4.7μF to 10μF	2.2μF to 10μF			≤ 10%
50V	100pF to 10nF	100pF to 39nF	150pF to 180nF	220pF to 470nF	2.2nF to 1μF		2.2nF to 1μF	≤ 2.5%
	12 nF to 47nF	47nF to 220nF	220nF to 470nF	680nF to 1μF				≤ 3.5%
			680nF	2.2μF				≤ 5%
			1μF		2.2μF to 10μF			≤ 10%
100V	All	100pF to 10nF	All	220pF to 680nF	2.2nF to 680nF		All	≤ 2.5%
				1μF	1μF			≤ 3.5%
		12nF to 100nF		2.2μF	2.2μF			≤ 5%
250V to 3KV		All	All	All	All	All	All	≤ 2.5%
Insulation resistance after 1 minute at U_r (DC)								I.R. ≥ 10 GΩ or R × C ≥ 500 Ω.F whichever is less R × C ≥ 100 Ω.F X7R/0603/1uF/16V to 25V X7R/0805/2.2μF/25V X7R/0805/4.7μF/16V X7R/1206/4.7μF to 10μF/16V to 25V X7R/1206/12nF to 33nF/500V to 630V X7R/1210/2.2μF to 10μF/16V to 50V, X7R/1210/2.2μF/100V
Maximum capacitance change as a function of temperature (temperature characteristic/coefficient):								NPO: ±30ppm X7R: ±15%
Operating temperature range:								–55 °C to +125 °C

Table 12

SOLDERING RECOMMENDATION

SOLDERING METHOD	SIZE 0402	0603	0805	1206	≥ 1210
Reflow	Reflow only	> 1.0 μF	> 2.2 μF	> 2.2 μF	Reflow only
Reflow/Wave		≤ 1.0 μF	≤ 2.2 μF	≤ 2.2 μF	---

chanhvinh.com

TESTS AND REQUIREMENTS

Table 13 Test procedures and requirements

TEST	TEST METHOD		PROCEDURE	REQUIREMENTS
Mounting	IEC 60384-21/22	4.3	The capacitors may be mounted on printed-circuit boards or ceramic substrates	No visible damage
Visual Inspection and Dimension Check		4.4	Any applicable method using × 10 magnification	In accordance with specification
Capacitance		4.5.1	Class 1: f = 1 MHz for C ≤ 1 nF, measuring at voltage 1 Vrms at 20 °C f = 1 KHz for C > 1 nF, measuring at voltage 1 Vrms at 20 °C Class II: At 20 °C, 24 hrs after annealing f = 1 KHz for C ≤ 10 μF, measuring at voltage 1 Vrms at 20 °C f = 120Hz for C >10 μF, measuring at voltage 0.5 Vrms at 20 °C	Within specified tolerance
Dissipation Factor (D.F.)		4.5.2	Class 1: f = 1 MHz for C ≤ 1 nF, measuring at voltage 1 Vrms at 20 °C f = 1 KHz for C > 1 nF, measuring at voltage 1 Vrms at 20 °C Class II: At 20 °C, 24 hrs after annealing f = 1 KHz for C ≤ 10 μF, measuring at voltage 1 Vrms at 20 °C f = 120Hz for C > 10 μF, measuring at voltage 0.5 Vrms at 20 °C	In accordance with specification
Insulation Resistance		4.5.3	U_r ≤ 500 V: At U_r for 1 minute U_r > 500 V: At 500 V for 1 minute	In accordance with specification

chanhvinh.com

TEST	TEST METHOD	PROCEDURE	REQUIREMENTS
Temperature Characteristic	IEC 60384-21/22 4.6	Capacitance shall be measured by the steps shown in the following table. The capacitance change should be measured after 5 min at each specified temperature stage. (1) Class I Temperature Coefficient shall be calculated from the formula as below Temp, Coefficient = $\frac{C2-C1}{C1\times\Delta T}\times10^6$ [ppm/°C] C1: Capacitance at step c C2: Capacitance at 125°C ΔT: 100°C (=125°C-25°C) (2) Class II Capacitance Change shall be calculated from the formula as below $\Delta C = \frac{C2-C1}{C1}\times 100\%$ C1: Capacitance at step c C2: Capacitance at step b or d	Class I: Δ C/C: ±30ppm Class II: X7R: Δ C/C: ±15%

Step	Temperature(°C)
a	25±2
b	Lower temperature±3°C
c	25±2
d	Upper Temperature±2°C
e	25±2

chanhvinh.com

TEST	TEST METHOD	PROCEDURE	REQUIREMENTS
Adhesion	4.7	A force applied for 10 seconds to the line joining the terminations and in a plane parallel to the substrate	Force size ≥ 0603: 5N size = 0402: 2.5N size = 0201: 1N
Bending Strength	4.8	Mounting in accordance with IEC 60384-22 paragraph 4.3	No visible damage
		Conditions: bending at a rate of 1 mm/s, radius jig 5 mm NPO: 5 mm X7R/0402 to 0603: 5 mm X7R/0805 to 1812: 3 mm	ΔC/C Class I: NP0: within ±1% or 0.5 pF, whichever is greater Class II: X7R: ±10%
Resistance to Soldering Heat	4.9	Precondition: 150 +0/–10 °C for 1 hour, then keep for 24 ±1 hours at room temperature	Dissolution of the end face plating shall not exceed 25% of the length of the edge concerned
		Preheating: for size ≤ 1206: 120 °C to 150 °C for 1 minute Preheating: for size >1206: 100 °C to 120 °C for 1 minute and 170 °C to 200 °C for 1 minute Solder bath temperature: 260 ±5 °C Dipping time: 10 ±0.5 seconds Recovery time: 24 ±2 hours	ΔC/C Class I: NP0: within ±0.5% or 0.5 pF, whichever is greater Class II: X7R: ±10%
			D.F. within initial specified value I.R. within initial specified value
Solderability	IEC 60384-21/22 4.10	Preheated the temperature of 80 °C to 140 °C and maintained for 30 seconds to 60 seconds. Test conditions for lead containing solder alloy Temperature: 235 ±5 °C Dipping time: 2 ±0.2 seconds Depth of immersion: 10 mm Alloy Composition: 60/40 Sn/Pb Number of immersions: 1 Test conditions for leadfree containing solder alloy Temperature: 245 ±5 °C Dipping time: 3 ±0.3 seconds Depth of immersion: 10 mm Alloy Composition: SAC305 Number of immersions: 1	The solder should cover over 95% of the critical area of each termination

chanhvinh.com

TEST	TEST METHOD	PROCEDURE	REQUIREMENTS
Rapid Change of Temperature	4.11	Preconditioning; 150 +0/–10 °C for 1 hour, then keep for 24 ±1 hours at room temperature 5 cycles with following detail: 30 minutes at lower category temperature 30 minutes at upper category temperature Recovery time 24 ±2 hours	No visual damage ΔC/C Class 1: NP0: within ±1% or 1 pF, whichever is greater Class II: X7R: ±15% D.F. meet initial specified value I.R. meet initial specified value
Damp Heat with U_r Load	IEC 60384-21/22 4.13	1. Preconditioning, class II only: 150 +0/-10 °C /1 hour, then keep for 24 ±1 hour at room temp 2. Initial measure: Spec: refer initial spec C, D, I.R. 3. Damp heat test: 500 ±12 hours at 40 ±2 °C; 90 to 95% R.H. 1.0 U_r applied 4. Recovery: Class 2: 24 ±2 hours 5. Final measure: C, D, I.R. P.S. If the capacitance value is less than the minimum value permitted, then after the other measurements have been made the capacitor shall be precondition according to *"IEC 60384 4.1"* and then the requirement shall be met.	No visual damage after recovery ΔC/C Class 1: NP0: within ±2% or 1 pF, whichever is greater Class II: X7R: ±15% D.F. Class 1: NP0: ≤ 2 x specified value Class II: X7R: ≤ 2 x specified value I.R. Class 1: NP0: ≥ 2,500 MΩ or R x C ≥ 25Ω.F whichever is less Class II: X7R: ≥ 500 MΩ or R x C ≥ 25Ω.F whichever is less
		X7R/0603/1uF/16V to 25V X7R/0805/4.7μF/16V X7R/1206/10μF/16V to 25V X7R/1210/2.2μF to 10μF/16V to 50V X7R/1210/2.2μF/100V	ΔC/C ±20% D.F. ≤ 2 x specified value I.R. R x C ≥ 5 Ω.F

chanhvinh.com

TEST	TEST METHOD		PROCEDURE	REQUIREMENTS
Endurance	IEC 60384-21/22	4.14	1. Preconditioning, class II only: 150 +0/-10 °C / 1 hour, then keep for 24 ±1 hour at room temp 2. Initial measure: Spec: refer initial spec C, D, I.R. 3. Endurance test: Temperature: NP0/X7R: 125 °C Specified stress voltage applied for 1,000 hours: 4. High voltage series follows with below stress condition: 5. Recovery time: 24 ±2 hours 6. Final measure: C, D, I.R. P.S. If the capacitance value is less than the minimum value permitted, then after the other measurements have been made the capacitor shall be precondition according to "IEC 60384 4.1" and then the requirement shall be met.	No visual damage ΔC/C Class1: NP0: within ±2% or 1 pF, whichever is greater Class II: X7R: ±15% D.F. Class1: NP0: ≤ 2 x specified value Class II: X7R: ≤ 2 x specified value I.R. Class1: NP0: ≥ 4,000 MΩ or R x C ≥ 40Ω.F whichever is less Class II: X7R: ≥ 1,000 MΩ or R x C ≥ 50Ω.F whichever is less
			* Apply 1.5 x Ur for below items X7R/0603/1uF/16V to 25V X7R/0805/4.7μF/16V X7R/1206/10μF/16V to 25V X7R/1210/2.2μF to 10μF/16V to 50V X7R/1210/2.2μF/100V * Apply 1.0 x Ur for below items NPO/1210/1.2nF to 33nF/1000V	ΔC/C ±20% D.F. ≤ 2 x specified value I.R. R x C ≥ 10 Ω.F
Voltage Proof	IEC 60384-1	4.6	Specified stress voltage applied for 1~5 seconds Ur ≤ 100 V: series applied 2.5 Ur 100 V < Ur ≤ 200 V series applied (1.5 Ur + 100) 200 V < Ur ≤ 500 V series applied (1.3 Ur + 100) Ur > 500 V: 1.3 Ur Ur ≧ 1000 V: 1.2 Ur Charge/Discharge current is less than 50 mA	No breakdown or flashover

chanhvinh.com

REVISION HISTORY

REVISION	DATE	CHANGE NOTIFICATION	DESCRIPTION
Version 9	Dec. 8, 2025	-	- Add NPO, 1210, 2.2nF to 33nF, 1KV
Version 8	Mar. 25, 2021	-	- Modify X7R, 1206, 330nF to 470nF, 100V thickness to 1.6+/-0.2mm
Version 7	Oct. 05, 2020	-	- Add X7R, 0603, 1uF, 25V and modify X7R, 1210, 2.2uF, 100V thickness to 2.5mm
Version 6	Feb. 18, 2020		- Modify X7R, 1206, 22nF, 500V thickness to 1.6mm
Version 5	May 23, 2019	-	- Product range changed
Version 4	Jun.19, 2017	-	- Product range updated
Version 3	Jan. 26, 2017	-	- Global part number coding rule update
Version 2	Dec. 30, 2016	-	- Dimension updated
Version 1	Dec. 16, 2016	-	- Product range updated
Version 0	May 20, 2016	-	- New datasheet for soft termination NPO & X7R series with RoHS compliant