chanhvinh.com

Innovative Service Around the Globe YAGEO

DATA SHEET

SURFACE-MOUNT CERAMIC MULTILAYER CAPACITORS

General Purpose & High Capacitance

Class 2, X7R

6.3 V TO 250 V

100 pF to 47 µF

RoHS compliant & Halogen Free

YAGEO

Product Specification – November 6, 2026 V.29



chanhvinh.com

SCOPE

This specification describes X7R series chip capacitors with lead-free terminations.

APPLICATIONS

- PCs, Hard disk, Game PCs
- DVDs, Video cameras
- Mobile phones
- Data processing

FEATURES

- Supplied in tape on reel
- Nickel-barrier end termination
- RoHS compliant
- Halogen Free compliant
- MSL class : level 1

ORDERING INFORMATION - GLOBAL PART NUMBER, PHYCOMP CTC & I2NC

All part numbers are identified by the series, size, tolerance, TC material, packing style, voltage, process code, termination and capacitance value.

YAGEO BRAND ordering code

GLOBAL PART NUMBER (PREFERRED)

CC	XXXX	X	X	X7R	X	BB	XXX
	(1)	(2)	(3)		(4)		(5)

(1) SIZE – INCH BASED (METRIC)

0201 (0603)
0402 (1005)
0603 (1608)
0805 (2012)
1206 (3216)
1210 (3225)
1812 (4532)
2220 (5750)

(2) TOLERANCE

J = ±5% (1)
K = ±10%
M = ±20%

(3) PACKING STYLE

R = Paper/PE taping reel; Reel 7 inch
K = Blister taping reel; Reel 7 inch
P = Paper/PE taping reel; Reel 13 inch
F = Blister taping reel; Reel 13 inch

(4) RATED VOLTAGE

5 = 6.3 V	0 = 100 V
6 = 10 V	A = 200 V
7 = 16 V	Y = 250 V
8 = 25 V	
9 = 50 V	

(5) CAPACITANCE VALUE

2 significant digits+number of zeros

The 3rd digit signifies the multiplying factor, and letter R is decimal point

Example: 103 = 10 × 10^3 = 10,000 pF = 10 nF

NOTE

1. Tolerance ±5% is not available for full product range, please contact local sales force before ordering

chanhvinh.com

CONSTRUCTION

The capacitor consists of a rectangular block of ceramic dielectric in which a number of interleaved metal electrodes are contained. This structure gives rise to a high capacitance per unit volume.

The inner electrodes are connected to the two end terminations and finally covered with a layer of plated tin (NiSn). The terminations are lead-free. A cross section of the structure is shown in Fig.1.

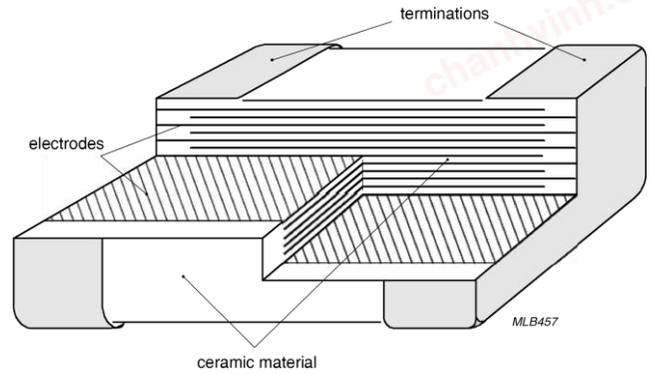

Fig. 1 Surface mounted multilayer ceramic capacitor construction

DIMENSION

Table 1 For outlines see fig. 2

TYPE	L_1 (mm)	W (mm)	T (mm)	L_2 / L_3 (mm)		L_4 (mm)	DIMENSION CODE
				min.	Max.	min.	
0201	0.6 ±0.03	0.3 ±0.03	0.3 ±0.03	0.1	0.2	0.2	BA
0402	1.0 ±0.05	0.5 ±0.05	0.5 ±0.05	0.15	0.35	0.3	CA
	1.0 ±0.20	0.5 ±0.20	0.5 ±0.20	0.15	0.35	0.3	CD
0603	1.6 ±0.1	0.8 ±0.1	0.8 ±0.1	0.2	0.6	0.4	DA
	1.6 ±0.15	0.8 ±0.15	0.8 ±0.15	0.2	0.6	0.4	DB
	1.6 ±0.2	0.8 ±0.2	0.8 ±0.2	0.2	0.6	0.4	DC
0805	2.0 ±0.1	1.25 ±0.1	0.6 ±0.1	0.25	0.75	0.7	E0
	2.0 ±0.2	1.25 ±0.2	0.85 ±0.1	0.25	0.75	0.7	EA
	2.0 ±0.2	1.25 ±0.2	1.25 ±0.2	0.25	0.75	0.7	EB
1206	3.2 ±0.15	1.6 ±0.15	0.85 ±0.1	0.25	0.75	1.4	F0
	3.2 ±0.2	1.6 ±0.2	1.0 ±0.1	0.25	0.75	1.4	F1
	3.2 ±0.2	1.6 ±0.2	1.15 ±0.1	0.25	0.75	1.4	FA
	3.2 ±0.3	1.6 ±0.2	1.25 ±0.2	0.25	0.75	1.4	FB
	3.2 ±0.3	1.6 ±0.2	1.6 ±0.2	0.25	0.8	1.4	FC
	3.2 ±0.3	1.6 ±0.3	1.6 ±0.3	0.3	0.9	1.4	FD
1210	3.2 ±0.2	2.5 ±0.2	0.85 ±0.1	0.25	0.75	1.4	G0
	3.2 ±0.4	2.5 ±0.3	1.25 ±0.2	0.25	0.75	1.4	GA
	3.2 ±0.4	2.5 ±0.3	1.6 ±0.2	0.25	0.75	1.4	G2
	3.2 ±0.4	2.5 ±0.3	1.9 ±0.2	0.25	0.75	1.4	GB
	3.2 ±0.4	2.5 ±0.3	2.0 ±0.2	0.25	0.75	1.4	G3
	3.2 ±0.4	2.5 ±0.3	2.5 ±0.2	0.25	0.75	1.0	GC
	3.2 ±0.4	2.5 ±0.3	2.5 ±0.3	0.25	0.75	1.0	GD
1812	4.5 ±0.4	3.2 ±0.3	0.85 ±0.1	0.25	0.75	2.2	JA
	4.5 ±0.4	3.2 ±0.2	1.25 ±0.2	0.25	0.75	2.2	JB
	4.5 ±0.4	3.2 ±0.4	1.6 ±0.2	0.25	0.75	2.2	JC
2220	5.7±0.4	5.0±0.3	1.15±0.1	0.25	0.75	3.8	KA

OUTLINES

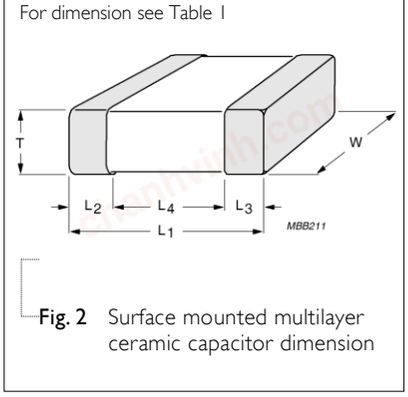

Fig. 2 Surface mounted multilayer ceramic capacitor dimension

chanhvinh.com

CAPACITANCE RANGE & THICKNESS FOR X7R

Table 2 Sizes from 0201 to 0402

CAP.	0201					0402					
	6.3 V	10 V	16 V	25 V	50 V	6.3 V	10 V	16 V	25 V	50 V	100 V
100 pF	BA	BA	BA	BA	BA	CA	CA	CA	CA	CA	CA
150 pF	BA	BA	BA	BA	BA	CA	CA	CA	CA	CA	CA
220 pF	BA	BA	BA	BA	BA	CA	CA	CA	CA	CA	CA
330 pF	BA	BA	BA	BA	BA	CA	CA	CA	CA	CA	CA
470 pF	BA	BA	BA	BA	BA	CA	CA	CA	CA	CA	CA
680 pF	BA	BA	BA	BA	BA	CA	CA	CA	CA	CA	CA
1.0 nF	BA	BA	BA	BA	BA	CA	CA	CA	CA	CA	CA
1.5 nF	BA	BA	BA	BA		CA	CA	CA	CA	CA	CA
2.2 nF	BA	BA	BA	BA		CA	CA	CA	CA	CA	CA
3.3 nF	BA	BA	BA	BA		CA	CA	CA	CA	CA	CA
4.7 nF	BA	BA	BA	BA		CA	CA	CA	CA	CA	CA
6.8 nF	BA	BA	BA	BA		CA	CA	CA	CA	CA	CA
10 nF	BA	BA	BA	BA		CA	CA	CA	CA	CA	CA
15 nF	BA					CA	CA	CA	CA	CA	
22 nF	BA		BA			CA	CA	CA	CA	CA	
33 nF	BA		BA			CA	CA	CA	CA	CA	
47 nF	BA		BA			CA	CA	CA	CA	CA	
68 nF	BA		BA			CA	CA	CA	CA	CA	
100 nF	BA	BA	BA			CA	CA	CA	CA	CA	
150 nF								CA	CA		
220 nF						CA	CA	CA	CA		
330 nF											
470 nF						CA	CA				
680 nF											
1 µF						CA	CA				
2.2 µF						CD					

NOTE

1. Values in shaded cells indicate thickness class in mm
2. Capacitance value of non E-6 series is on request
3. For product with 5% tolerance, please contact local sales force before ordering

CASE SIZE	L (mm)	W (mm)	T (mm)	DIMENSION CODE
0201	0.6 ±0.03	0.3 ±0.03	0.3 ±0.03	BA
0402	1.0 ±0.05	0.5 ±0.05	0.5 ±0.05	CA
	1.0 ±0.20	0.5 ±0.20	0.5 ±0.20	CD

chanhvinh.com

CAPACITANCE RANGE & THICKNESS FOR X7R

Table 3 Sizes from 0603

CAP.	0603							
	6.3 V	10 V	16 V	25 V	50 V	100V	200V	250V
100 pF	DA	DA	DA	DA	DA	DA		
150 pF	DA	DA	DA	DA	DA	DA		
220 pF	DA	DA	DA	DA	DA	DA	DA	DA
330 pF	DA	DA	DA	DA	DA	DA	DA	DA
470 pF	DA	DA	DA	DA	DA	DA	DA	DA
680 pF	DA	DA	DA	DA	DA	DA	DA	DA
1.0 nF	DA	DA	DA	DA	DA	DA	DA	DA
1.5 nF	DA	DA	DA	DA	DA	DA	DA	DA
2.2 nF	DA	DA	DA	DA	DA	DA	DA	DA
3.3 nF	DA	DA	DA	DA	DA	DA	DA	DA
4.7 nF	DA	DA	DA	DA	DA	DA	DA	DA
6.8 nF	DA	DA	DA	DA	DA	DA	DA	DA
10 nF	DA	DA	DA	DA	DA	DA	DA	DA
15 nF	DA	DA	DA	DA	DA	DA	DA	DA
22 nF	DA	DA	DA	DA	DA	DA	DA	DA
33 nF	DA	DA	DA	DA	DA	DA		
47 nF	DA	DA	DA	DA	DA	DA		
68 nF	DA	DA	DA	DA	DA	DA		
100 nF	DA	DA	DA	DA	DA	DA		
150 nF	DA	DA	DA	DA	DA			
220 nF	DA	DA	DA	DA	DA			
330 nF	DA	DA	DA	DA				
470 nF	DA	DA	DA	DA	DA			
680 nF	DA	DA	DA	DA	DB			
1 µF	DA	DA	DA	DA	DB			
2.2 µF	DA	DA	DC	DC				
4.7 µF								

NOTE

1. Values in shaded cells indicate thickness class in mm
2. Capacitance value of non E-6 series is on request
3. For product with 5% tolerance, please contact local sales force before ordering

CASE SIZE	L (mm)	W (mm)	T (mm)	DIMENSION CODE
0603	1.6 ±0.1	0.8 ±0.1	0.8 ±0.1	DA
	1.6 ±0.15	0.8 ±0.15	0.8 ±0.15	DB
	1.6 ±0.2	0.8 ±0.2	0.8 ±0.2	DC

chanhvinh.com

CAPACITANCE RANGE & THICKNESS FOR X7R

Table 4 Sizes from 0805

CAP.	0805							
	6.3 V	10 V	16 V	25 V	50 V	100V	200V	250V
100 pF	E0	E0	E0	E0	E0	E0	EA	EA
150 pF	E0	E0	E0	E0	E0	E0	EA	EA
220 pF	E0	E0	E0	E0	E0	E0	EA	EA
330 pF	E0	E0	E0	E0	E0	E0	EA	EA
470 pF	E0	E0	E0	E0	E0	E0	EA	EA
680 pF	E0	E0	E0	E0	E0	E0	EA	EA
1.0 nF	E0	E0	E0	E0	E0	E0	EA	EA
1.5 nF	E0	E0	E0	E0	E0	E0	EA	EA
2.2 nF	E0	E0	E0	E0	E0	E0	EA	EA
3.3 nF	E0	E0	E0	E0	E0	E0	EA	EA
4.7 nF	E0	E0	E0	E0	E0	E0	EA	EA
6.8 nF	E0	E0	E0	E0	E0	E0	EB	EB
10 nF	E0	E0	E0	E0	E0	E0	EB	EB
15 nF	E0	E0	E0	E0	E0	EA	EB	EB
22 nF	E0	E0	E0	E0	E0	EA	EB	EB
33 nF	EA	EA	EA	EA	EA	EB	EB	EB
47 nF	EA	EA	EA	EA	EA	EB	EB	EB
68 nF	EA	EA	EA	EA	EA	EB	EB	EB
100 nF	EA	EA	EA	EA	EA	EB	EB	EB
150 nF	EA	EA	EA	EA	EA	EB		
220 nF	EA	EA	EA	EA	EB	EB		
330 nF	EB	EB	EB	EB	EB	EB		
470 nF	EB	EB	EB	EB	EB	EB		
680 nF	EB	EB	EB	EB	EB	EB		
1 µF	EB	EB	EB	EB	EB	EB		
2.2 µF	EB	EB	EB	EB	EB			
4.7 µF	EB	EB	EB	EB				
10 µF	EB	EB	EB					

NOTE

1. Values in shaded cells indicate thickness class in mm
2. Capacitance value of non E-6 series is on request
3. For product with 5% tolerance, please contact local sales force before ordering

CASE SIZE	L (mm)	W (mm)	T (mm)	DIMENSION CODE
0805	2.0 ±0.1	1.25 ±0.1	0.6 ±0.1	E0
	2.0 ±0.2	1.25 ±0.2	0.85 ±0.1	EA
	2.0 ±0.2	1.25 ±0.2	1.25 ±0.2	EB

chanhvinh.com

CAPACITANCE RANGE & THICKNESS FOR X7R

Table 5 Size 1206

CAP.	1206							
	6.3 V	10 V	16 V	25 V	50 V	100V	200V	250V
220 pF	F0	F0	F0	F0	F0	F0	F0	F0
330 pF	F0	F0	F0	F0	F0	F0	F0	F0
470 pF	F0	F0	F0	F0	F0	F0	F0	F0
680 pF	F0	F0	F0	F0	F0	F0	F0	F0
1.0 nF	F0	F0	F0	F0	F0	F0	F0	F0
1.5 nF	F0	F0	F0	F0	F0	F0	F0	F0
2.2 nF	F0	F0	F0	F0	F0	F0	F0	F0
3.3 nF	F0	F0	F0	F0	F0	F0	F0	F0
4.7 nF	F0	F0	F0	F0	F0	F0	F0	F0
6.8 nF	F0	F0	F0	F0	F0	F0	F0	F0
10 nF	F0	F0	F0	F0	F0	F0	F0	F0
15 nF	F0	F0	F0	F0	F0	F0	F0	F0
22 nF	F0	F0	F0	F0	F0	F0	FB	FB
33 nF	F0	F0	F0	F0	F0	F0	FB	FB
47 nF	F0	F0	F0	F0	F0	F0	FB	FB
68 nF	F0	F0	F0	F0	F0	FB	FB	FB
100 nF	F0	F0	F0	F0	F0	FB	FC	FC
150 nF	F0	F0	F0	F0	FA	FB	FC	FC
220 nF	F0	F0	F0	F0	FA	FB	FC	FC
330 nF	F0	F0	F0	F0	F0	FC		
470 nF	F0	F0	F0	F0	F1	FC		
680 nF	FA	FA	FA	FA	FC	FC		
1 µF	FA	FA	FA	FA	FC	FC		
2.2 µF	FA	FA	FA	FA	FC	FC		
4.7 µF	FC	FC	FC	FC	FC	FD		
10 µF	FC	FC	FC	FC	FD			
22 µF	FC	FC	FD					

NOTE

1. Values in shaded cells indicate thickness class in mm
2. Capacitance value of non E-6 series is on request
3. For product with 5% tolerance, please contact local sales force before ordering
4. Please contact local sales force for special ordering code before ordering

CASE SIZE	L (mm)	W (mm)	T (mm)	DIMENSION CODE
1206	3.2 ±0.15	1.6 ±0.15	0.85 ±0.1	F0
	3.2 ±0.2	1.6 ±0.2	1.0 ±0.1	F1
	3.2 ±0.2	1.6 ±0.2	1.15 ±0.1	FA
	3.2 ±0.3	1.6 ±0.2	1.25 ±0.2	FB
	3.2 ±0.3	1.6 ±0.2	1.6 ±0.2	FC
	3.2 ±0.3	1.6 ±0.3	1.6 ±0.3	FD

chanhvinh.com

CAPACITANCE RANGE & THICKNESS FOR X7R

Table 6 Sizes from 1210

CAP.	1210							
	6.3 V	10 V	16 V	25 V	50 V	100V	200V	250V
2.2 nF	G0	G0	G0	G0	G0	G0	G0	G0
3.3 nF	G0	G0	G0	G0	G0	G0	G0	G0
4.7 nF	G0	G0	G0	G0	G0	G0	G0	G0
6.8 nF	G0	G0	G0	G0	G0	G0	G0	G0
10 nF	G0	G0	G0	G0	G0	G0	G0	G0
15 nF	G0	G0	G0	G0	G0	G0	G0	G0
22 nF	G0	G0	G0	G0	G0	G0	GA	GA
33 nF	G0	G0	G0	G0	G0	G0	GA	GA
47 nF	G0	G0	G0	G0	G0	G0	GA	GA
68 nF	G0	G0	G0	G0	G0	G0	GA	GA
100 nF	G0	G0	G0	G0	G0	G0	GA	GA
150 nF	G0	G0	G0	G0	GA	GA	GA	GA
220 nF	G0	G0	G0	G0	GA	GA	GA	GA
330 nF	G0	G0	G0	G0	GA	GA		
470 nF	GA	GA	GA	GA	GA	GA		
680 nF	GA	GA	GA	GA	GA	G3		
1 µF	GA	GA	GA	GA	GA	G3		
2.2 µF	G3	G3	G3	G3	G3	G3		
4.7 µF	GB	GB	GB	GB	GD	GD		
10 µF	GB	GB	GB	GB	GD			
22 µF	GC	GC	GC	GC				
47 µF	GC	GC						

NOTE

1. Values in shaded cells indicate thickness class in mm
2. Capacitance value of non E-6 series is on request
3. For product with 5% tolerance, please contact local sales force before ordering
4. Please contact local sales force for special ordering code before ordering

CASE SIZE	L (mm)	W (mm)	T (mm)	DIMENSION CODE
1210	3.2 ±0.2	2.5 ±0.2	0.85 ±0.1	G0
	3.2 ±0.4	2.5 ±0.3	1.25 ±0.2	GA
	3.2 ±0.4	2.5 ±0.3	1.6 ±0.2	G2
	3.2 ±0.4	2.5 ±0.3	1.9 ±0.2	GB
	3.2 ±0.4	2.5 ±0.3	2.0 ±0.2	G3
	3.2 ±0.4	2.5 ±0.3	2.5 ±0.2	GC
	3.2 ±0.4	2.5 ±0.3	2.5 ±0.3	GD

chanhvinh.com

Table 7 Sizes from 1812 to 2220

CAP.	1812				2220
	50 V	100V	200V	250V	50 V
4.7 nF	JA	JA	JA	JA	
6.8 nF	JA	JA	JA	JA	
10 nF	JA	JA	JA	JA	
15 nF	JA	JA	JA	JA	
22 nF	JA	JA	JA	JA	
33 nF	JA	JA	JA	JA	
47 nF	JA	JA	JB	JB	
68 nF	JA	JA	JB	JB	
100 nF	JB	JB	JB	JB	
150 nF	JB	JB	JB	JB	
220 nF	JB	JB	JC	JC	
330 nF	JB	JB	JC	JC	
470 nF	JB	JC	JC	JC	KA
680 nF	JC	JC			
1 µF	JC	JC			KA

NOTE

1. Values in shaded cells indicate thickness class in mm
2. Capacitance value of non E-6 series is on request
3. For product with 5% tolerance, please contact local sales force before ordering
4. Please contact local sales force for special ordering code before ordering

CASE SIZE	L (mm)	W (mm)	T (mm)	DIMENSION CODE
1812	4.5 ±0.4	3.2 ±0.3	0.85 ±0.1	JA
	4.5 ±0.4	3.2 ±0.3	1.25 ±0.2	JB
	4.5 ±0.4	3.2 ±0.4	1.6 ±0.2	JC
2220	5.7±0.4	5.0 ±0.3	1.15 ±0.1	KA

chanhvinh.com

THICKNESS CLASSES AND PACKING QUANTITY

Table 8

SIZE	THICKNESS CLASSIFICATION	TAPE WIDTH QUANTITY PER REEL	Ø180 MM / 7 INCH		Ø330 MM / 13 INCH	
			Paper	Blister	Paper	Blister
0201	0.3 ±0.03 mm	8 mm	15,000	---	50,000	---
0402	0.5 ± 0.05 mm	8 mm	10,000	---	50,000	---
	0.5 ± 0.2 mm				40,000	
0603	0.8 ±0.1 mm	8 mm	4,000	---	15,000	---
0805	0.6 ±0.1 mm	8 mm	4,000	---	20,000	---
	0.85 ±0.1 mm	8 mm	4,000	---	15,000	---
	1.25 ±0.2 mm	8 mm	---	3,000	---	10,000
1206	0.6 ±0.1 mm	8 mm	4,000	---	20,000	---
	0.85 ±0.1 mm	8 mm	4,000	---	15,000	---
	1.00 / 1.15 ±0.1 mm	8 mm	---	3,000	---	10,000
	1.25 ±0.2 mm	8 mm	---	3,000	---	10,000
	1.6 ±0.15 mm	8 mm	---	2,500	---	10,000
	1.6 ± 0.2/0.3 mm	8 mm	---	2,000	---	8,000
1210	0.6 / 0.7 ±0.1 mm	8 mm	---	4,000	---	15,000
	0.85 ±0.1 mm	8 mm	---	4,000	---	10,000
	1.0 ±0.1 mm	8 mm	---	3,000	---	10,000
	1.15 ±0.1 mm	8 mm	---	3,000	---	10,000
	1.15 ±0.15 mm	8 mm	---	3,000	---	10,000
	1.25 ±0.2 mm	8 mm	---	3,000	---	10,000
	1.5 ±0.1 mm	8 mm	---	2,000	---	---
	1.6 / 1.9 ±0.2 mm	8 mm	---	2,000	---	---
	2.0 ±0.2 mm	8 mm	---	2,000	---	---
	2.5 ± 0.2/0.3 mm	8 mm	---	1,000 500*	---	---
1808	1.15 ±0.15 mm	12 mm	---	3,000	---	---
	1.25 ±0.2 mm	12 mm	---	3,000	---	---
	1.35 ±0.15 mm	12 mm	---	2,000	---	---
	1.5 ±0.1 mm	12 mm	---	2,000	---	---
	1.6 ±0.2 mm	12 mm	---	2,000	---	---
	2.0 ±0.2 mm	12 mm	---	2,000	---	---
1812	0.6 / 0.85 ±0.1 mm	12 mm	---	2,000	---	---
	1.15 ±0.1 mm	12 mm	---	1,000	---	---
	1.15 ±0.15 mm	12 mm	---	1,000	---	---
	1.35 ±0.15 mm	12 mm	---	1,000	---	---
	1.5 ±0.1 mm	12 mm	---	1,000	---	---
	1.6 ±0.2 mm	12 mm	---	1,000	---	---
	2.0 ±0.2 mm	12 mm	---	1,000	---	---
	2.5 ±0.2 mm	12 mm	---	500	---	---

* : 4.7uF, 50V / 10uF, 25V to 50V / 22uF, 10V to 25V / 47uF, 6.3V to 10V;

chanhvinh.com

PAPER/PE TAPE SPECIFICATION

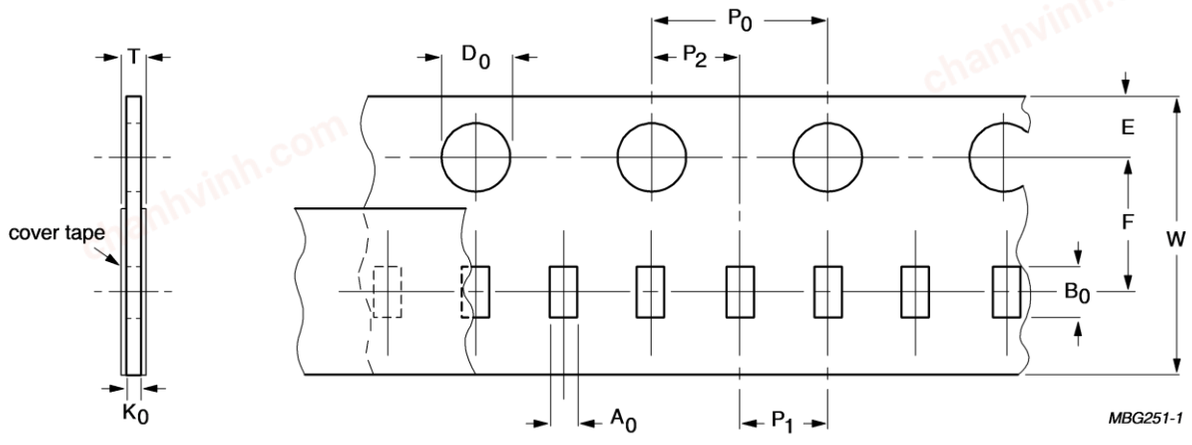

Fig. 3 Paper/PE tape

Table 9 Dimensions of paper/PE tape for relevant chip size; see Fig.3

Unit: mm

SIZE CODE	SYMBOL A_0	B_0	W	E	F	P_0 (1)	P_1	P_2	$\varnothing D_0$	K_0	T
01005	0.24 ±0.03	0.45 ±0.03	8.0 ±0.2	1.75 ±0.1	3.50 ±0.05	4.0 ±0.05	2.0 ±0.05	2.0 ±0.05	1.50 ±0.1	0.24 ± 0.03	0.36 ± 0.01
0201	0.39 ±0.06	0.70 ±0.06	8.0 ±0.2	1.75 ±0.1	3.50 ±0.05	4.0 ±0.05	2.0 ±0.05	2.0 ±0.05	1.55 ±0.03	0.38 ± 0.05	(0.47 / 0.55)±0.10
0402	0.70 ±0.15	1.21 ±0.12	8.0 ±0.2	1.75 ±0.1	3.50 ±0.05	4.0 ±0.05	2.0 ±0.05	2.0 ±0.05	1.50 +0.1 /-0	(0.75 / 0.60)±0.10	(0.85 / 0.70)±0.10
0603	1.05 ±0.14	1.86 ±0.13	8.0 ±0.2	1.75 ±0.1	3.50 ±0.05	4.0 ±0.10	4.0 ±0.10	2.0 ±0.05	1.50 +0.1 /-0	(1.05 / 0.95 / 0.75)±0.10	(1.15 / 1.05 / 0.85)±0.10
0805	1.50 ±0.15	2.26 ±0.20	8.0 ±0.2	1.75 ±0.1	3.50 ±0.05	4.0 ±0.10	4.0 ±0.10	2.0 ±0.05	1.50 +0.1 /-0	(1.05 / 0.95 / 0.75)±0.10	(1.15 / 1.05 / 0.85)±0.10
1206	1.90 ±0.15	3.50 ±0.20	8.0 ±0.2	1.75 ±0.1	3.50 ±0.05	4.0 ±0.10	4.0 ±0.10	2.0 ±0.05	1.50 +0.1 /-0	(0.95 / 0.75)±0.10	(1.05 / 0.85)± 0.10
4 × 0402	1.50 ±0.15	2.26 ±0.20	8.0 ±0.2	1.75 ±0.1	3.50 ±0.05	4.0 ±0.10	4.0 ±0.10	2.0 ±0.05	1.50 +0.1 /-0	(1.05 / 0.95 / 0.75)±0.10	(1.15 / 1.05 / 0.85)±0.10
4 × 0603	1.90 ±0.15	3.50 ±0.20	8.0 ±0.2	1.75 ±0.1	3.50 ±0.05	4.0 ±0.10	4.0 ±0.10	2.0 ±0.05	1.50 +0.1 /-0	(0.95 / 0.75)±0.10	(1.05 / 0.85)±0.10
0508	1.50 ±0.15	2.26 ±0.20	8.0 ±0.2	1.75 ±0.1	3.50 ±0.05	4.0 ±0.10	4.0 ±0.10	2.0 ±0.05	1.50 +0.1 /-0	(1.05 / 0.95 / 0.75)±0.10	(1.15 / 1.05 / 0.85)±0.10
0612	1.90 ±0.15	3.50 ±0.20	8.0 ±0.2	1.75 ±0.1	3.50 ±0.05	4.0 ±0.10	4.0 ±0.10	2.0 ± .05	1.50 +0.1 /-0	(0.95 / 0.75)±0.10	(1.05 / 0.85)±0.10

NOTE

1. P_0 pitch tolerance over any 10 pitches is ±0.2 mm
2. 4 x 0402 stands for 0508 array
3. 4 x 0603 stands for 0612 array

chanhvinh.com

BLISTER TAPE SPECIFICATION

For dimension see Table 4

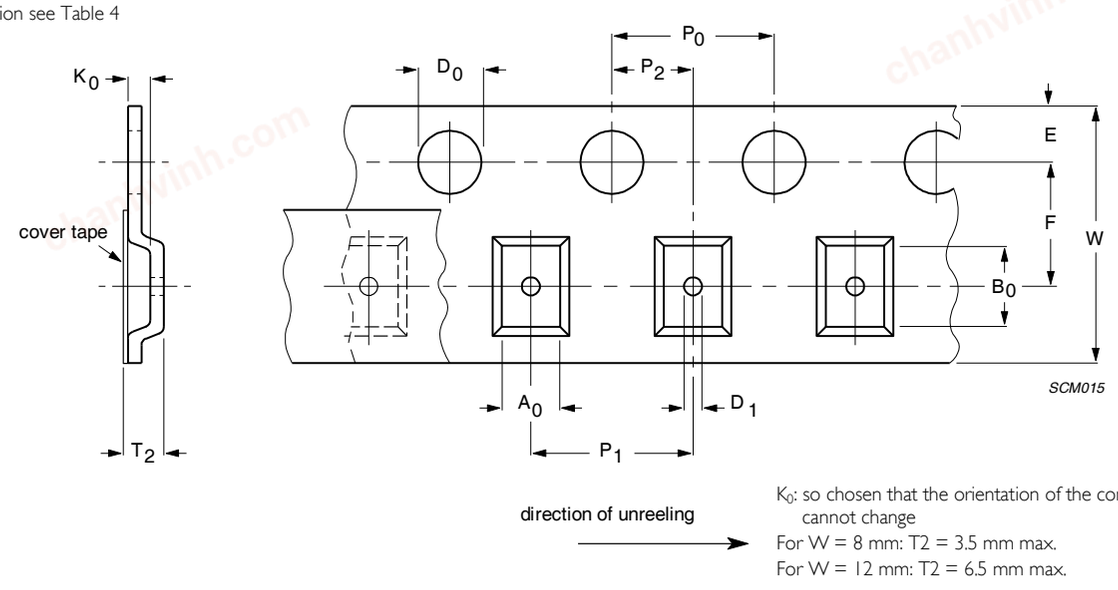

K_0: so chosen that the orientation of the component cannot change
For W = 8 mm: T2 = 3.5 mm max.
For W = 12 mm: T2 = 6.5 mm max.

Fig. 4 Blister tape

Table 10 Dimensions of blister tape for relevant chip size; see Fig.4

SIZE CODE	SYMBOL																Unit: mm
	A_0		B_0		K_0		W	E	F	$ØD_0$	$ØD_1$	P_0 (2)	P_1	P_2	T2	
	Min.	Max.	Min.	Max.	Min.	Max.					Min.				Min.	Max.
0805	1.29	1.65	2.09	2.60	1.25	1.62	8.1 ±0.20	1.75 ±0.1	3.5 ±0.05	1.5 +0.1/-0.0	1 +0.1/-0.0	4.0 ±0.10	4.0 ±0.10	2.0 ±0.05	1.30	1.67
1206	1.65	2.12	3.30	3.75	1.22	2.15	8.1 ±0.20	1.75 ±0.1	3.5 ±0.05	1.5 +0.1/-0.0	1 +0.1/-0.0	4.0 ±0.10	4.0 ±0.10	2.0 ±0.05	1.27	2.20
1210	2.55	3.02	3.31	3.88	0.97	2.92	8.1 ±0.20	1.75 ±0.1	3.5 ±0.05	1.5 +0.1/-0.0	1 +0.1/-0.0	4.0 ±0.10	4.0 ±0.10	2.0 ±0.05	1.02	2.97
1808	2.05	2.55	4.80	5.45	1.30	2.45	12.1 ±0.20	1.75 ±0.1	5.5 ±0.05	1.5 +0.1/-0.0	1.5 +0.1/-0.0	4.0 ±0.10	4.0 ±0.10	2.0 ±0.05	1.35	2.50
1812	3.35	3.75	4.70	5.33	0.70	2.40	12.1 ±0.20	1.75 ±0.1	5.5 ±0.05	1.5 +0.1/-0.0	1.5 +0.1/-0.0	4.0 ±0.10	8.0 ±0.10	2.0 ±0.05	0.75	2.45
2220	5.12	5.32	5.84	6.04	1.28	1.48	12.0 ±0.20	1.75 ±0.1	5.5 ±0.05	1.5 +0.1/-0.0	1.5 +0.1/-0.0	4.0 ±0.10	8.0 ±0.10	2.0 ±0.05	1.33	1.53

NOTE

1. Typical capacitor displacement in pocket
2. P_0 pitch tolerance over any 10 pitches is ±0.2 mm

chanhvinh.com

REEL SPECIFICATION

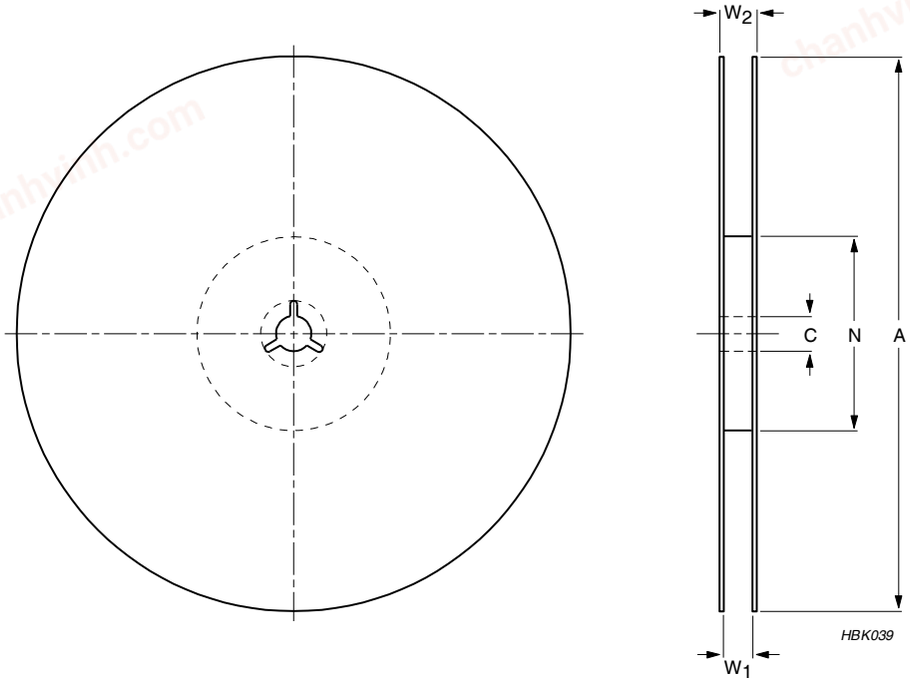

Fig. 5 Reel

Table 11 Reel dimensions; see Fig.5

TAPE WIDTH	SYMBOL				Unit: mm
	A	N	C	W_1	$W_{2max.}$
8 (Ø178 mm/7")	178 ±1.0	60 ±1.0	13 +0.50/-0.20	9.4 ±1.5	14.4
8 (Ø330 mm/13")	330 ±1.0	100 ±1.0	13 +0.50/-0.20	9.0 ±0.2	14.4
12 (Ø178 mm/7")	178 ±1.0	60 ±1.0	13 +0.50/-0.20	13.4 ±1.5	18.4

PROPERTIES OF REEL

Material: polystyrene

Surface resistance: $<10^{10}$ Ω/sq.

chanhvinh.com

ELECTRICAL CHARACTERISTICS

X7R DIELECTRIC CAPACITORS; NISN TERMINATIONS

Unless otherwise specified, all test and measurements shall be made under standard atmospheric conditions for testing as given in 5.3 of IEC 60068-1:

- Temperature: 15 ° C to 35 ° C
- Relative humidity: 25% to 75%
- Air pressure: 86 kPa to 106 kPa

Before the measurements are made, the capacitor shall be stored at the measuring temperature for a time sufficient to allow the entire capacitor to reach this temperature.
The period as prescribed for recovery at the end of a test is normally sufficient for this purpose.

Table 12

DESCRIPTION									VALUE
Capacitance range									100 pF to 47 µF
Capacitance tolerance									±5%, ±10%, ±20%
Dissipation factor (D.F.)									
X7R(S)	0201	0402	0603	0805	1206	1210	1812	2220	D.F.
≤ 6.3V	100pF to 10nF	100pF to 100nF	100pF to 220nF	100pF to 2.2µF	220pF to 2.2µF	2.2nF to 2.2µF	6.8nF to 1µF		≤5%
			270nF to 1µF						≤7%
	15nF to 100nF	220nF to 470nF, 2.2µF	2.2µF	4.7µF to 10µF	4.7µF to 22µF	4.7µF to 47µF			≤10%
		1µF							≤12.5%
10V	100pF to 10nF	100pF to 100nF	100pF to 220nF	100pF to 2.2µF	220pF to 2.2µF	2.2nF to 2.2µF	6.8nF to 1µF		≤5%
			270nF to 1µF						≤7%
	100nF	220nF to 470nF	2.2µF to 4.7µF	4.7µF to 10µF	4.7µF to 22µF	4.7µF to 47µF			≤10%
		1µF							≤12.5%
16V	100pF to 1.2nF	100pF to 22nF	100pF to 220nF	100pF to 470nF	220pF to 1µF	2.2nF to 1µF	6.8nF to 1µF		≤3.5%
	1.5nF to 10nF	27nF to 100nF		680nF to 2.2µF	2.2µF	2.2µF			≤5%
			270nF to 1µF						≤7%
	22nF to 100nF	220nF	2.2µF	4.7µF to 10µF	4.7µF to 22µF	4.7µF to 22µF			≤10%
25V		100pF to 10nF	100pF to 39nF	100pF to 180nF	220pF to 180nF	2.2nF to 1µF	6.8nF to 1µF		≤2.5%
	100pF to 470pF	12nF to 47nF	47nF to 220nF	220nF to 470nF	220nF to 1µF				≤3.5%
	560pF to 10nF	56nF to 100nF		560nF to 2.2µF	2.2µF	2.2µF			≤5%
			270nF to 1µF						≤7%
		120nF to 220nF	2.2µF	4.7µF	4.7µF to 10µF	4.7µF to 22µF			≤10%
50V		100pF to 10nF	100pF to 39nF	100pF to 180nF	220pF to 180nF	2.2nF to 1µF	6.8nF to 1µF	470nF to 1µF	≤2.5%
	100pF to 470pF	12nF to 33nF	47nF to 220nF	220nF to 470nF	220nF to 1µF				≤3.5%
	560pF to 1nF			560nF to 680nF					≤5%
		47nF to 82nF							≤7%
		100nF	470nF to 1µF	1µF to 2.2µF	2.2µF to 4.7µF	2.2µF to 10µF			≤10%
100V		100pF to 10nF	100pF to 10nF	100pF to 470nF	220pF to 470nF	2.2nF to 680nF	6.8nF to 1µF		≤2.5%
					560nF to 820nF	1µF to 2.2µF			≤3.5%
			12nF to 100nF	560nF to 1µF	1µF to 2.2µF				≤5%
						4.7µF			≤10%
200/250V			220pF to 22nF	100pF to 100nF	220pF to 220nF	2.2nF to 220nF	6.8nF to 470nF		≤2.5%
Insulation resistance after 1 minute at U_r (DC)					R_{ins} ≥ 10 GΩ or R_{ins} × C_r ≥ 500/100/50* seconds whichever is less				
Maximum capacitance change as a function of temperature (temperature characteristic/coefficient):									±15%
Operating temperature range:									–55 °C to +125 °C

chanhvinh.com

NOTE

X7R(S)	0201	0402	0603	0805	1206	1210	1812	2220	* I.R.
≤ 6.3V	100pF to 10nF	100pF to 100nF	100pF to 470nF	100pF to 2.2μF	220pF to 2.2μF	2.2nF to 4.7μF	6.8nF to 1μF		Rins ≥ 10 GΩ or Rins × Cr ≥ 500Ω.F
	15nF to 100nF		560nF to 2.2μF	4.7μF to 10μF	4.7μF to 47μF	10μF to 47μF			Rins × Cr ≥ 100Ω.F
		220nF to 1μF							Rins × Cr ≥ 50Ω.F
10V	100pF to 10nF	100pF to 100nF	100pF to 470nF	100pF to 2.2μF	220pF to 2.2μF	2.2nF to 4.7μF	6.8nF to 1μF		Rins ≥ 10 GΩ or Rins × Cr ≥ 500Ω.F
	100nF		560nF to 2.2μF	4.7μF to 10μF	4.7μF to 47μF	10μF to 47μF			Rins × Cr ≥ 100Ω.F
		220nF to 1μF							Rins × Cr ≥ 50Ω.F
16V	100pF to 10nF	100pF to 100nF	100pF to 470nF	100pF to 2.2μF	220pF to 2.2μF	2.2nF to 4.7μF	6.8nF to 1μF		Rins ≥ 10 GΩ or Rins × Cr ≥ 500Ω.F
	22nF to 100nF		560nF to 2.2μF	4.7μF to 10μF	4.7μF to 22μF	10μF to 22μF			Rins × Cr ≥ 100Ω.F
		220nF							Rins × Cr ≥ 50Ω.F
25V	100pF to 10nF	100pF to 100nF	100pF to 220nF	100pF to 1μF	220pF to 2.2μF	2.2nF to 2.2μF	6.8nF to 1μF		Rins ≥ 10 GΩ or Rins × Cr ≥ 500Ω.F
			270nF to 1μF	2.2μF to 4.7μF	4.7μF to 10μF	4.7μF to 22μF			Rins × Cr ≥ 100Ω.F
		220nF	2.2μF						Rins × Cr ≥ 50Ω.F
50V	100pF to 1nF	100pF to 82nF	100pF to 220nF	100pF to 1μF	220pF to 100nF	2.2nF to 1μF	6.8nF to 330nF	470nF	Rins ≥ 10 GΩ or Rins × Cr ≥ 500Ω.F
		100nF	270nF to 1μF	2.2μF	120nF to 10μF	2.2μF to 10μF	470nF to 1μF	1μF	Rins × Cr ≥ 100Ω.F
100V		100pF to 10nF	100pF to 100nF	100pF to 1μF	220pF to 100nF	2.2nF to 56nF	6.8nF to 330nF		Rins ≥ 10 GΩ or Rins × Cr ≥ 500Ω.F
					120nF to 4.7μF	68nF to 4.7μF	470nF to 1μF		Rins × Cr ≥ 100Ω.F
200/ 250V			220pF to 22nF	100pF to 100nF	220pF to 22nF	2.2nF to 33nF	6.8nF to 120nF		Rins ≥ 10 GΩ or Rins × Cr ≥ 500Ω.F
					27nF to 220nF	39nF to 220nF	150nF to 470nF		Rins × Cr ≥ 100Ω.F

SOLDERING RECOMMENDATION

Table 13

SOLDERING METHOD	SIZE ≤ 0402	0603	0805	1206	≥ 1210
Reflow	Reflow only	> 1.0 μF	> 2.2 μF	> 4.7 μF	Reflow only
Reflow/Wave		≤ 1.0 μF	≤ 2.2 μF	≤ 4.7 μF	---

chanhvinh.com

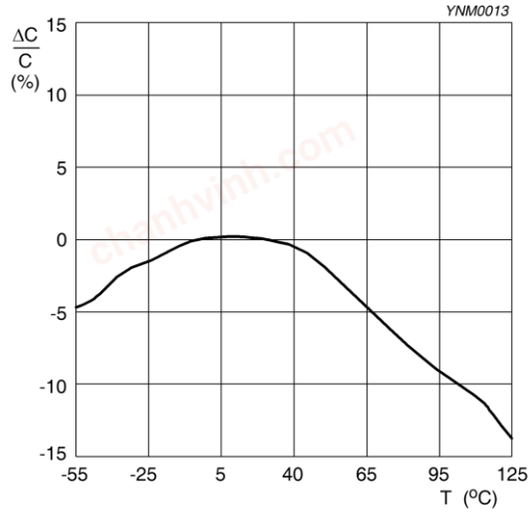

Fig. 6 Typical capacitance change as a function of temperature

Size 0201 10 nF / 16 V
Solid lines: Impedance / Dotted lines: ESR

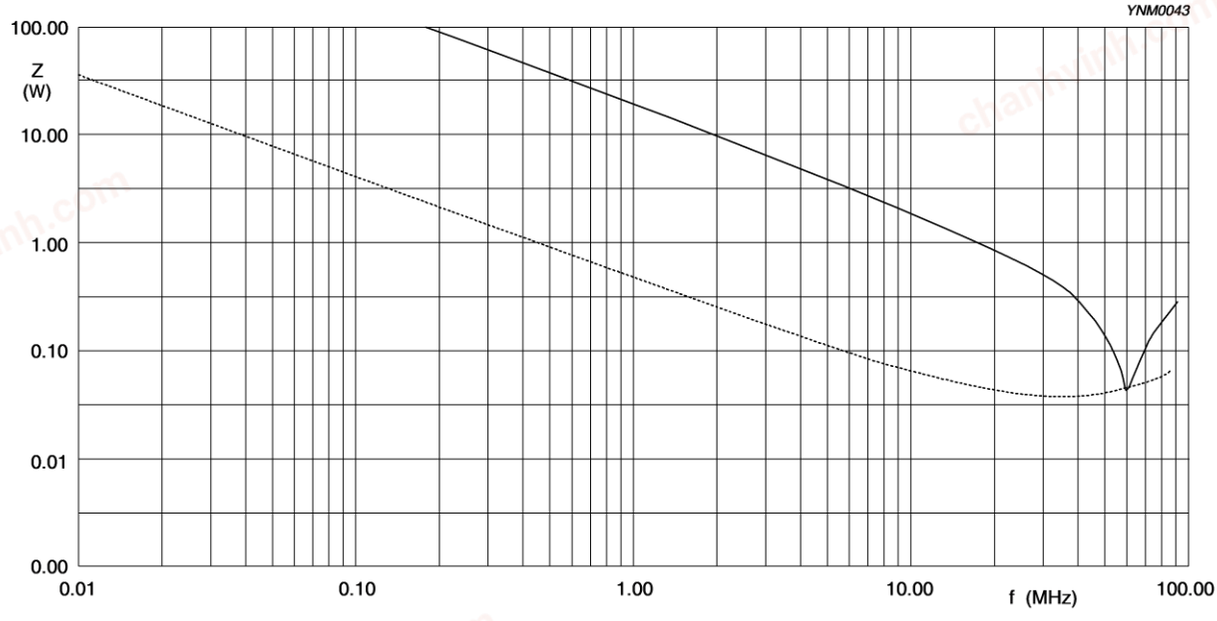

Fig. 7 Impedance ESR vs. frequency characteristics for multilayer chip capacitors

chanhvinh.com

Size 0402 100 nF / 16 V
Solid lines: Impedance / Dotted lines: ESR

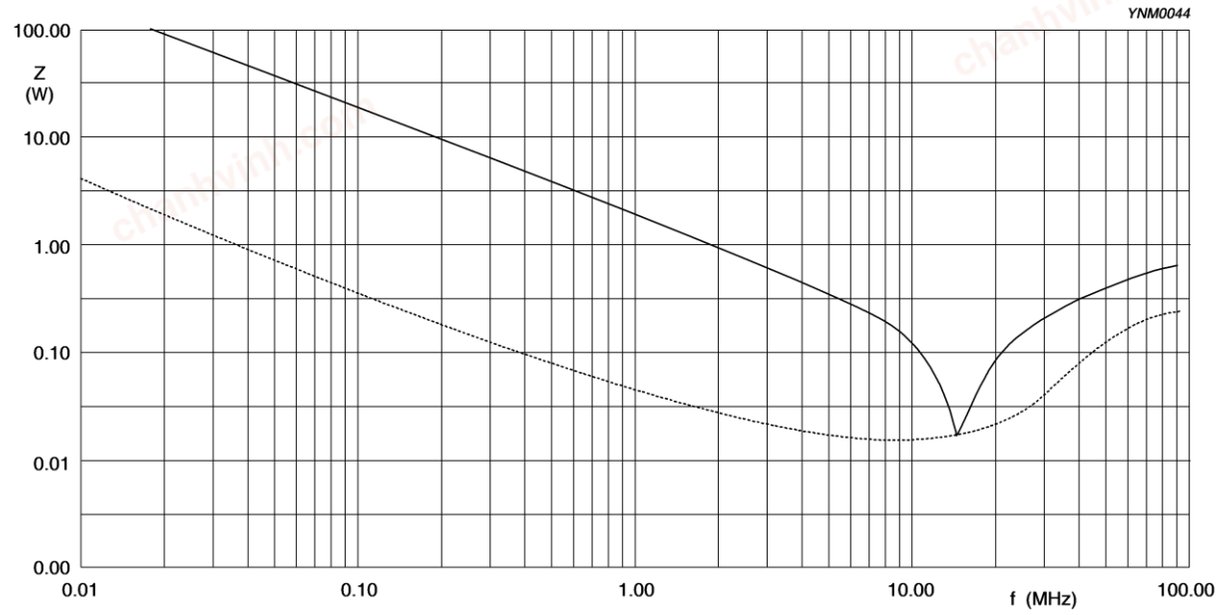

Fig. 8 Impedance ESR vs. frequency characteristics for multilayer chip capacitors

Size 0603 1 µF / 16 V
Solid lines: Impedance / Dotted lines: ESR

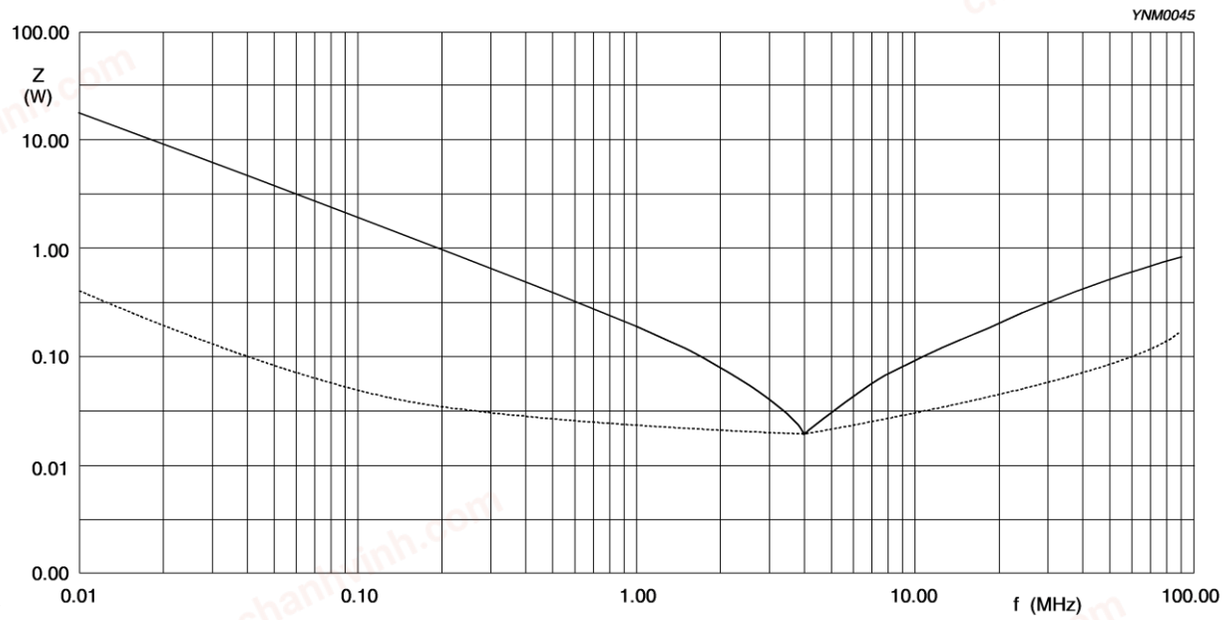

Fig. 9 Impedance ESR vs. frequency characteristics for multilayer chip capacitors

chanhvinh.com

Size 0805 1 µF / 16 V
Solid lines: Impedance / Dotted lines: ESR

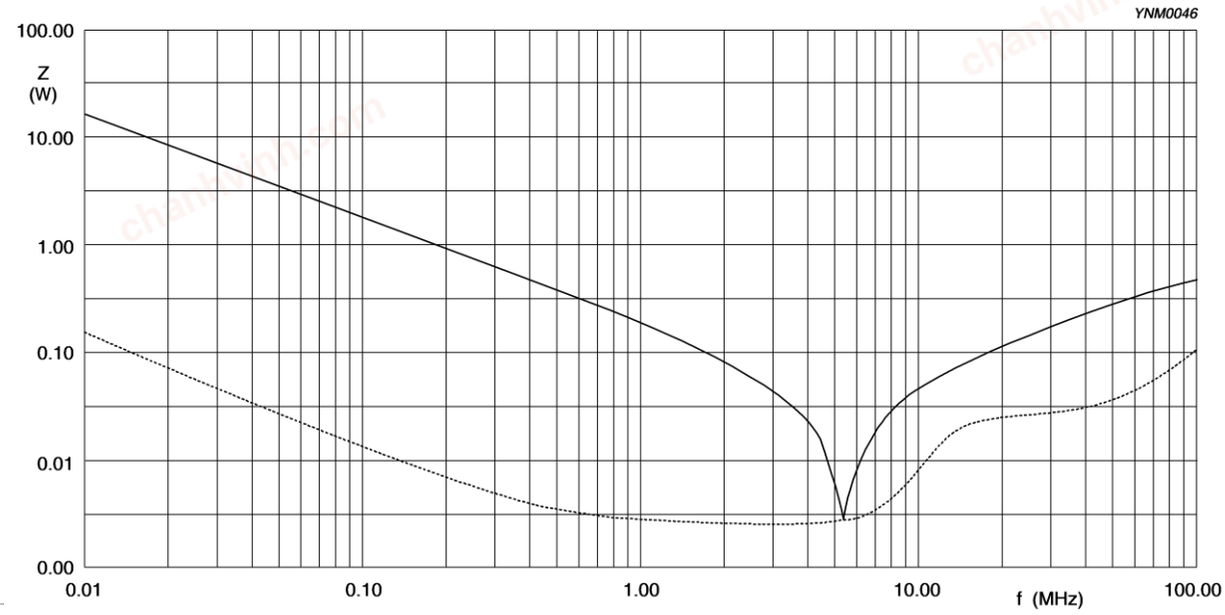

Fig. 10 Impedance ESR vs. frequency characteristics for multilayer chip capacitors

Size 1206 1 µF / 25 V
Solid lines: Impedance / Dotted lines: ESR

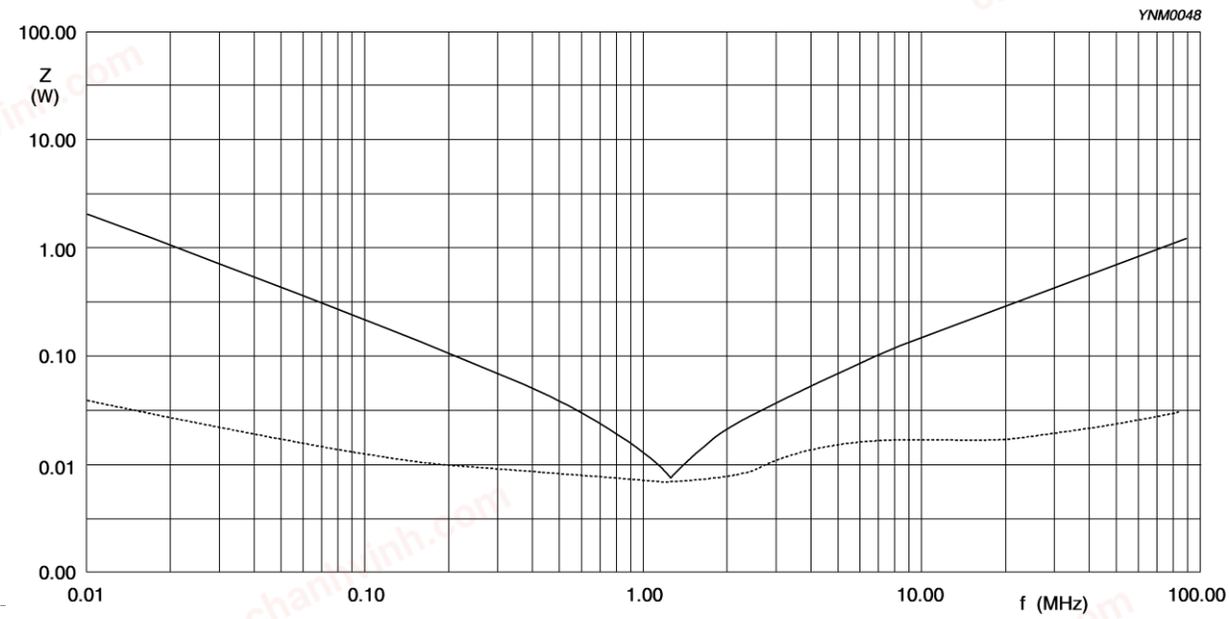

Fig. 11 Impedance ESR vs. frequency characteristics for multilayer chip capacitors

chanhvinh.com

Size 1206 10 µF / 10 V
Solid lines: Impedance / Dotted lines: ESR

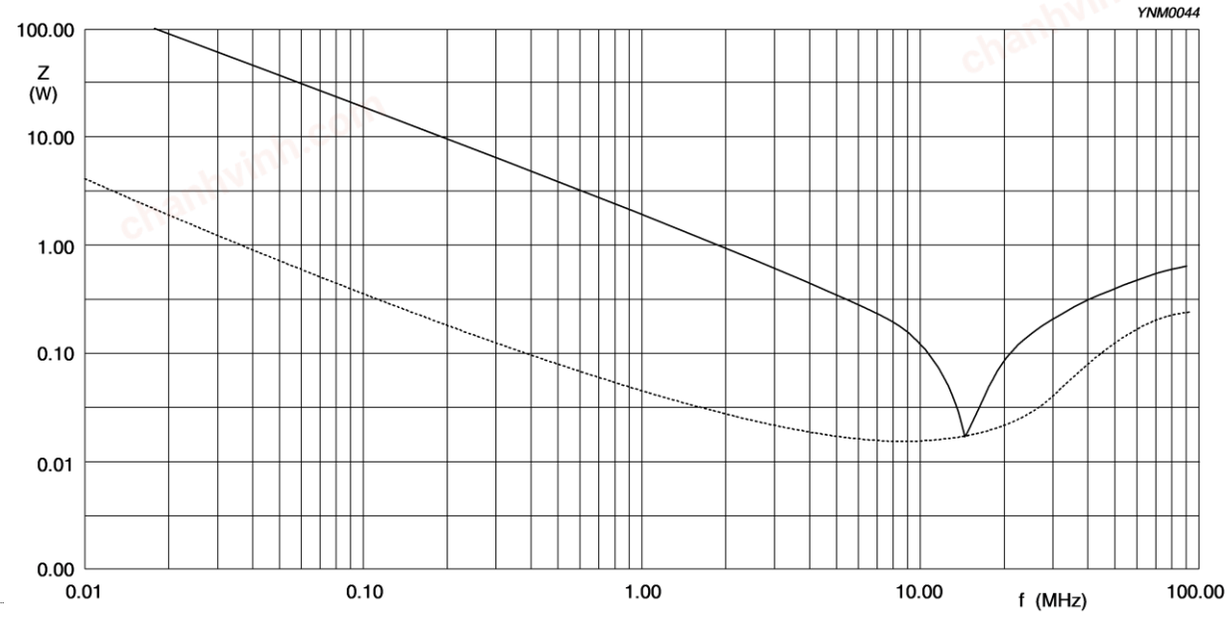

Fig. 12 Impedance ESR vs. frequency characteristics for multilayer chip capacitors

chanhvinh.com

TESTS AND REQUIREMENTS

Table 14 Test procedures and requirements

TEST	TEST METHOD		PROCEDURE	REQUIREMENTS
Mounting	IEC 60384-21/22	4.3	The capacitors may be mounted on printed-circuit boards or ceramic substrates	No visible damage
Visual Inspection and Dimension Check		4.4	Any applicable method using × 10 magnification	In accordance with specification
Capacitance (1)		4.5.1	Class II:	Within specified tolerance
Dissipation Factor (D.F.) (1)		4.5.2	At 20°C, 24 hrs after annealing Cap ≤ 1 μF, f = 1 KHz, measuring at voltage 1 Vrms at 20°C Cap > 1 μF, f = 1 KHz for C ≤ 10 μF, rated voltage > 6.3 V, measuring at voltage 1 Vrms at 20°C f = 1 KHz, for C ≤ 10 μF, rated voltage ≤ 6.3 V, measuring at voltage 0.5 Vrms at 20°C f = 120 Hz for C > 10 μF, measuring at voltage 0.5 Vrms at 20°C	
Insulation Resistance		4.5.3	At U_r (DC) for 1 minute	In accordance with specification

NOTE:

1. For individual product specification, please contact local sales.

chanhvinh.com

TEST	TEST METHOD	PROCEDURE	REQUIREMENTS
Temperature Characteristic	IEC 60384-21/22 4.6	Capacitance shall be measured by the steps shown in the following table. The capacitance change should be measured after 5 min at each specified temperature stage. Class II Capacitance Change shall be calculated from the formula as below $\Delta C = \frac{C2 - C1}{C1} \times 100\%$ C1: Capacitance at step c C2: Capacitance at step b or d	Class II: X7R: Δ C/C: ±15% 0201/22nF~100nF/16V: within 1/2 DC bias
Adhesion	4.7	A force applied for 10 seconds to the line joining the terminations and in a plane parallel to the substrate	Force size ≥ 0603: 5N size = 0402: 2.5N size = 0201: 1N

Step	Temperature(°C)
a	25±2
b	Lower temperature±3°C
c	25±2
d	Upper Temperature±2°C
e	25±2

chanhvinh.com

TEST	TEST METHOD	PROCEDURE	REQUIREMENTS
Bending Strength	4.8	Mounting in accordance with IEC 60384-22 paragraph 4.3 Conditions: bending 1 mm at a rate of 1 mm/s, radius jig 5 mm Test Substrate: 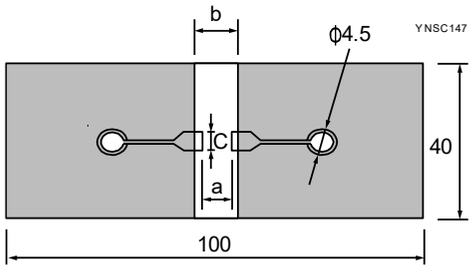 unit:mm	No visible damage ΔC/C Class II: <General purpose series> X7R: ±10% <High Capacitance series> X7R: ±12.5%

	Dimension(mm)		
Type	a	b	c
0201	0.3	0.9	0.3
0402	0.4	1.5	0.5
0603	1.0	3.0	1.2
0805	1.2	4.0	1.65
1206	2.2	5.0	1.65
1210	2.2	5.0	2.0
1808	3.5	7.0	3.7

Resistance to Soldering Heat	4.9	Precondition: 150 +0/–10°C for 1 hour, then keep for 24 ±1 hours at room temperature Preheating: for size ≤ 1206: 120°C to 150°C for 1 minute Preheating: for size >1206: 100°C to 120°C for 1 minute and 170°C to 200°C for 1 minute Solder bath temperature: 260 ±5°C Dipping time: 10 ±0.5 seconds Recovery time: 24 ±2 hours	Dissolution of the end face plating shall not exceed 25% of the length of the edge concerned ΔC/C Class II: X7R: ±10% D.F. within initial specified value R_{ins} within initial specified value

chanhvinh.com

TEST	TEST METHOD	PROCEDURE	REQUIREMENTS
Solderability	IEC 60384-21/22 4.10	Preheated to a temperature of 80°C to 140°C and maintained for 30 seconds to 60 seconds. 1. Temperature: 235±5°C / Dipping time: 2 ±0.5 s 2. Temperature: 245±5°C / Dipping time: 3 ±0.5 s (lead free) Depth of immersion: 10mm	The solder should cover over 95% of the critical area of each termination
Rapid Change of Temperature	4.11	Preconditioning; 150 +0/–10°C for 1 hour, then keep for 24 ±1 hours at room temperature 5 cycles with following detail: 30 minutes at lower category temperature 30 minutes at upper category temperature Recovery time 24 ±2 hours	No visual damage ΔC/C Class II: X7R: ±15% D.F. meet initial specified value R_{ins} meet initial specified value
Damp Heat with U_r Load	IEC 60384-21/22 4.13	1. Preconditioning, Class II only: 150 +0/-10°C /1 hour, then keep for 24 ±1 hour at room temp 2. Initial measure: Spec: refer to initial spec C, D, IR 3. Damp heat test: 500 ±12 hours at 40 ±2° C; 90 to 95% R.H. 1.0 U_r applied 4. Recovery: Class II: 24 ±2 hours 5. Final measure: C, D, IR P.S. If the capacitance value is less than the minimum value permitted, then after the other measurements have been made the capacitor shall be preconditioned according to *"IEC 60384 4.1"* and then the requirement shall be met. * Note	No visual damage after recovery <General Purpose series> ΔC/C Class II: X7R: ±15% D.F. Class II: X7R： ≤ 16V: ≤ 7% or 2 x initial value whichever is greater ≥ 25V: ≤ 5% or 2 x initial value whichever is greater R_{ins} Class II: X7R: ≥ 500 MΩ or $R_{ins} \times C_r \geq 25s$ whichever is less <High Capacitance series> ΔC/C Class II: X7R: ±20% D.F. Class II: X7R: 2 x initial value max R_{ins} Class II: X7R: 500 MΩ or $R_{ins} \times C_r \geq 5s$ whichever is less

chanhvinh.com

* Note

X7R(S)	0201	0402	0603	0805	1206	1210	1812	Product Type
≤ 6.3V	100pF to 10nF	100pF to 100nF	100pF to 470nF	220pF to 1μF	220pF to 1μF	2.2nF to 1μF		General Purpose
	15nF to 100nF	220nF to 2.2μF	560nF to 2.2μF	2.2μF to 10μF	2.2μF to 22μF	2.2μF to 47μF		High Capacitance
10V	100pF to 10nF	100pF to 100nF	100pF to 470nF	220pF to 1μF	220pF to 1μF	2.2nF to 1μF		General Purpose
	100nF	220nF to 1μF	560nF to 2.2μF	2.2μF to 10μF	2.2μF to 22μF	2.2μF to 47μF		High Capacitance
16V	100pF to 10nF	100pF to 100nF	100pF to 470nF	220pF to 1μF	220pF to 1μF	2.2nF to 1μF		General Purpose
	22nF to 100nF	220nF	560nF to 2.2μF	2.2μF to 10μF	2.2μF to 22μF	2.2μF to 22μF		High Capacitance
25V	100pF to 10nF	100pF to 100nF	100pF to 470nF	220pF to 1μF	220pF to 1μF	2.2nF to 1μF		General Purpose
			560nF to 2.2μF	2.2μF to 4.7μF	2.2μF to 10μF	2.2μF to 22μF		High Capacitance
50V	100pF to 1nF	100pF to 47nF	100pF to 220nF	220pF to 1μF	220pF to 1μF	2.2nF to 1μF	4.7nF to 1μF	General Purpose
		100nF	560nF to 1μF	2.2μF	2.2μF to 10μF	2.2μF to 10μF		High Capacitance
100V		100pF to 10nF	100pF to 100nF	220pF to 1μF	220pF to 1μF	2.2nF to 1μF	4.7nF to 470nF	General Purpose
					2.2μF to 4.7μF	2.2μF to 4.7μF		High Capacitance
200V/250V			220pF to 22nF	220pF to 100nF	220pF to 220nF	2.2nF to 220nF	4.7nF to 470nF	General Purpose

chanhvinh.com

TEST	TEST METHOD	PROCEDURE	REQUIREMENTS
Endurance	IEC 60384-21/22 4.14	1. Preconditioning, class 2 only: 150 +0/-10 °C /1 hour, then keep for 24 ±1 hour at room temp 2. Initial measure: Spec: refer to initial spec C, D, IR 3. Endurance test: Temperature: X7R: 125 °C Specified stress voltage applied for 1,000 hours: Applied 2.0 x U_r for general products* Applied 1.5 x U_r for high cap. Products* 4. Recovery time: 24 ±2 hours 5. Final measure: C, D, IR P.S. If the capacitance value is less than the minimum value permitted, then after the other measurements have been made the capacitor shall be preconditioned according to *"IEC 60384 4.1"* and then the requirement shall be met. * Note	No visual damage <General Purpose series> ΔC/C Class II: X7R: ±15% D.F. Class II: X7R : ≤ 16V: ≤ 7% or 2 x initial value whichever is greater ≥ 25V: ≤ 5% or 2 x initial value whichever is greater R_{ins} Class II: X7R: ≥ 1,000 MΩ or R_{ins} x C_r ≥ 50s whichever is less <High Capacitance series> ΔC/C Class II: X7R: ±20% D.F. Class II: X7R: 2 x initial value max R_{ins} Class II: X7R: 1,000 MΩ or R_{ins} x C_r ≥ 10s whichever is less

* Note

X7R(S)	0201	0402	0603	0805	1206	1210	1812	2220	Test voltage
≤6.3V	100pF to 10nF	100pF to 100nF	100pF to 470nF	220pF to 1μF	220pF to 1μF	2.2nF to 1μF			200% x Rated voltage
	100nF	220nF to 2.2μF	560nF to 2.2μF	2.2μF to 10μF	2.2μF to 22μF	2.2μF to 47μF			150% x Rated voltage
10V	100pF to 10nF	100pF to 100nF	100pF to 470nF	220pF to 1μF	220pF to 1μF	2.2nF to 1μF			200% x Rated voltage
	100nF	220nF to 1μF	560nF to 2.2μF	2.2μF to 10μF	2.2μF to 22μF	2.2μF to 47μF			150% x Rated voltage
16V	100pF to 10nF	100pF to 100nF	100pF to 470nF	220pF to 1μF	220pF to 1μF	2.2nF to 1μF			200% x Rated voltage
	22nF to 100nF	220nF	560nF to 2.2μF	2.2μF to 10μF	2.2μF to 22μF	2.2μF to 22μF			150% x Rated voltage
25V	100pF to 10nF	100pF to 100nF	100pF to 470nF	220pF to 1μF	220pF to 1μF	2.2nF to 1μF			200% x Rated voltage
			560nF to 2.2μF	2.2μF to 4.7μF	2.2μF to 10μF	2.2μF to 22μF			150% x Rated voltage
50V	100pF to 1nF	100pF to 47nF	100pF to 330nF	220pF to 1μF	220pF to 1μF	2.2nF to 1μF	4.7nF to 1μF	470nF to 1μF	200% x Rated voltage
		100nF	470nF to 1μF	2.2μF	2.2μF to 10μF	2.2μF to 10μF			150% x Rated voltage
100V		100pF to 10nF	100pF to 100nF	220pF to 680nF	220pF to 1μF	2.2nF to 1μF	4.7nF to 1μF		200% x Rated voltage
				1μF	2.2μF	2.2μF			150% x Rated voltage
					4.7μF				100% x Rated voltage
250V			220pF to 22nF	220pF to 100nF	220pF to 100nF	2.2nF to 220nF	4.7nF to 470nF		150% x Rated voltage

chanhvinh.com

TEST	TEST METHOD	PROCEDURE	REQUIREMENTS
Voltage Proof	IEC 60384-1 4.6	1. Specified stress voltage applied for 1~5 seconds 2. Ur ≤ 100 V: series applied 2.5 Ur 3. 100 V < Ur ≤ 200 V series applied (1.5 Ur + 100) 4. 200 V < Ur ≤ 500 V series applied (1.3 Ur + 100) Charge/Discharge current is less than 50 mA	No breakdown or flashover

chanhvinh.com

REVISION HISTORY

REVISION	DATE	CHANGE NOTIFICATION	DESCRIPTION
Version 29	Nov. 6, 2026	-	- Correction 0603, X7R, 2.2uF, 16V I.R. from R x C > 50 to 100.
Version 28	Oct. 13, 2026	-	- Remove 0603, X7R, 4.7uF, 6.3V - Add 0603, X7R, 2.2uF, 25V - Add 1206, X7R, 10uF, 50V - Add 1206, X7R, 4.7uF, 100V
Version 27	Mar. 6, 2026	-	- Add 0201, 22nF to 100nF, 16V
Version 26	Nov. 19, 2024	-	- Add 0201, 100nF, 10V - Add 0805, 68nF to 100nF, 200V/250V - Add 1206, 150nF to 220nF, 200V/250V - 1812 Dimension updated
Version 25	May 31, 2024	-	- Add X7R/1210/100V/4.7uF
Version 24	Mar. 12, 2024	-	- Modify X7R/0805/15nF to 22nF/100V dimension typo.
Version 23	Nov. 29, 2023	-	- 0805, 100V, 5.6nF to 10nF dimension updated
Version 22	Oct. 07, 2022	-	- 1206/4.7uF/6.3V to 16V I.R. updated
Version 21	Sep. 06, 2022	-	- Add 100V to 250V product range. - Dissipation factor and I.R. spec updated
Version 20	Sep. 8, 2020	-	- 0402, 220nF to 470nF, 10V Insulation resistance after 1 minute at Ur (DC) updated
Version 19	Aug. 17, 2020	-	- Add 0402/220nF/25V
Version 18	May. 11th, 2017	-	- Add 1210/10uF/50V
Version 17	Mar. 7th, 2017	-	- 0805 L4 spec updated - Dimension updated
Version 16	Dec. 7th, 2016	-	- Dimension updated
Version 15	Oct. 3rd, 2016	-	- Dimension updated, Soldering recommendation updated
Version 14	May 31st, 2016	-	- Dimension updated
Version 13	Dec. 30, 2015	-	- Dimension on 0603 and 1206 case size updated
Version 12	May 26, 2015	-	- 1210, 25V dissipation factor updated
Version 11	Jan. 06, 2015	-	- 0402, 100nF, 50V Dissipation factor (D.F.) updated.
Version 10	Jul. 08, 2014	-	- Dimension updated
Version 9	Aug. 19, 2013	-	- Dimension updated
Version 8	Oct. 13, 2011	-	- Dimension updated - 50V Dissipation factor(D.F) updated
Version 7	Jan. 13, 2011	-	- Dimension updated
Version 6	Oct. 13, 2010	-	- Rated voltage of 0201 extend to 50 V - Capacitance range of 0201 X7R 6.3V to 16V extend to 100 pF - Capacitance range of 0805 X7R 10V extend to 10 µF - Capacitance range of 0805 X7R 50V extend to 1 µF - Capacitance range of 1210 X7R 10V extend to 22 µF - Figures of impedance ESR updated

chanhvinh.com

REVISION HISTORY

REVISION	DATE	CHANGE NOTIFICATION	DESCRIPTION
Version 5	Jul 27, 2010	-	- Dimension on 0603 and 1206 case size updated - 16V to 25V Dissipation factor(D.F) updated
Version 4	Apr 21, 2010	-	- The statement of "Halogen Free" on the cover added - Dimension updated
Version 3	Oct 26, 2009	-	- Capacitance range of 0402 X7R 25 V extend to 100 nF - 16V Dissipation factor updated
Version 2	May 11, 2009	-	- Product range updated
Version 1	Apr 24, 2009	-	- Ordering code updated
Version 0	Apr 15, 2009	-	- New datasheet for general purpose and high capacitance X7R series with RoHS compliant - Replace the "6.3V to 50V" part of pdf files: X7R_10V_9, X7R_16V-to-100V_9, X7R_16-to-500V_9, UP-X5R_X7R_HighCaps_6.3-to-25V_11, UY-X5R_X7R_HighCaps_6.3-to-25V_11 - Combine 0201 from pdf files: UP-NP0X5RX7RY5V_0201_6.3-to-50V_2 and UY-NPOX5RX7RY5V_0201_6.3-to-50V_2 - Define global part number - Description of "Halogen Free compliant" added - Test method and procedure updated

chanhvinh.com

LEGAL DISCLAIMER

YAGEO, its distributors and agents (collectively, "YAGEO"), hereby disclaims any and all liabilities for any errors, inaccuracies or incompleteness contained in any product related information, including but not limited to product specifications, datasheets, pictures and/or graphics. YAGEO may make changes, modifications and/or improvements to product related information at any time and without notice.

YAGEO makes no representation, warranty, and/or guarantee about the fitness of its products for any particular purpose or the continuing production of any of its products. To the maximum extent permitted by law, YAGEO disclaims (i) any and all liability arising out of the application or use of any YAGEO product, (ii) any and all liability, including without limitation special, consequential or incidental damages, and (iii) any and all implied warranties, including warranties of fitness for a particular purpose, non -infringement and merchantability.

YAGEO products are designed for general purpose applications under normal operation and usage conditions. Please contact YAGEO for the applications listed below which require especially high reliability for the prevention of defects which might directly cause damage to the third party's life, body or property: Aerospace equipment (artificial satellite, rocket, etc.), Atomic energy-related equipment, Aviation equipment, Disaster prevention equipment, crime prevention equipment, Electric heating apparatus, burning equipment, Highly public information network equipment, data-processing equipment , Medical devices, Military equipment, Power generation control equipment, Safety equipment, Traffic signal equipment, Transportation equipment and Undersea equipment, or for any other application or use in which the failure of YAGEO products could result in personal injury or death, or serious property damage. Particularly **YAGEO Corporation and its affiliates do not recommend the use of commercial, automotive, and/or COTS grade products for high reliability applications or manned space flight.**

Information provided here is intended to indicate product specifications only. YAGEO reserves all the rights for revising this content without further notification, as long as products are unchanged. Any product change will be announced by PCN.