chanhvinh.com

AC1206FR-07330KL

YAGEO, AC, Thick Film, SMD Chip, 330 kOhms, 1%, 1206 / 3216

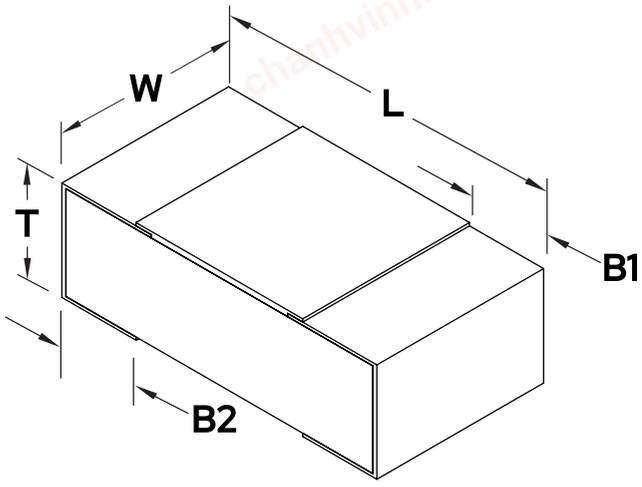

Click here for the 3D model.

General Information	
Supplier	YAGEO
Series	AC
Style	SMD Chip
Description	Automotive Grade, Thick Film Resistors
RoHS	Yes
Termination	Tin
Lead	Wrap Around, 3-Sided
Qualifications	AEC-Q200
Case Code (EIA / mm)	1206 / 3216

Dimensions	
L	3.1mm +/-0.1mm
W	1.6mm +/-0.1mm
T	0.55mm +/-0.1mm
B1	0.45mm +/-0.2mm
B2	0.45mm +/-0.2mm

Packaging Specifications	
Packaging	T&R, 178mm
Packaging Quantity	5000

Specifications	
Resistance	330 kOhms
Resistance Tolerance	1%
Power	0.25 W (70C)
Temp. Coefficient	-/+100 ppm/C
Temperature Range	-55/+155°C
Voltage DC	200 V (Max Continuous Voltage at Full Rated Power), 400 Max Over Voltage, 500 Dielectric Withstanding Voltage

Statements of suitability for certain applications are based on our knowledge of typical operating conditions for such applications, but are not intended to constitute - and we specifically disclaim - any warranty concerning suitability for a specific customer application or use. This Information is intended for use only by customers who have the requisite experience and capability to determine the correct products for their application. Any technical advice inferred from this Information or otherwise provided by us with reference to the use of our products is given gratis, and we assume no obligation or liability for the advice given or results obtained.

© 2006 - 2026 YAGEO