chanhvinh.com

Innovative Service Around the Globe YAGEO

DATA SHEET

GAS DISCHARGE TUBES
TELEPHONE INTERFACE

3R-6-SSS series

RoHS compliant & free



Product specification– February 02, 2021 V.1

chanhvinh.com

Gas Discharge Tube (GDT) Data Sheet

Features



- Provide ultra-fast response to surge voltage from slow-rising surge of 100V/s to rapid-rising surge of 1KV/μs
- Stable breakdown voltage
- High insulation resistance
- Low capacitance (≤2pF)
- High holdover voltage
- Large absorbing transient current capability
- Micro-Gap Design
- Size: 6.0mm*8.5mm
- Storage and operational temperature: -40℃ ~ +85℃
- Meets MSL level 1, per J-STD-020
- Safety certification: UL

Applications

- Repeaters, Modems
- Telephone Interface, Line cards
- Data communication equipment
- Line test equipment

Part Number Code

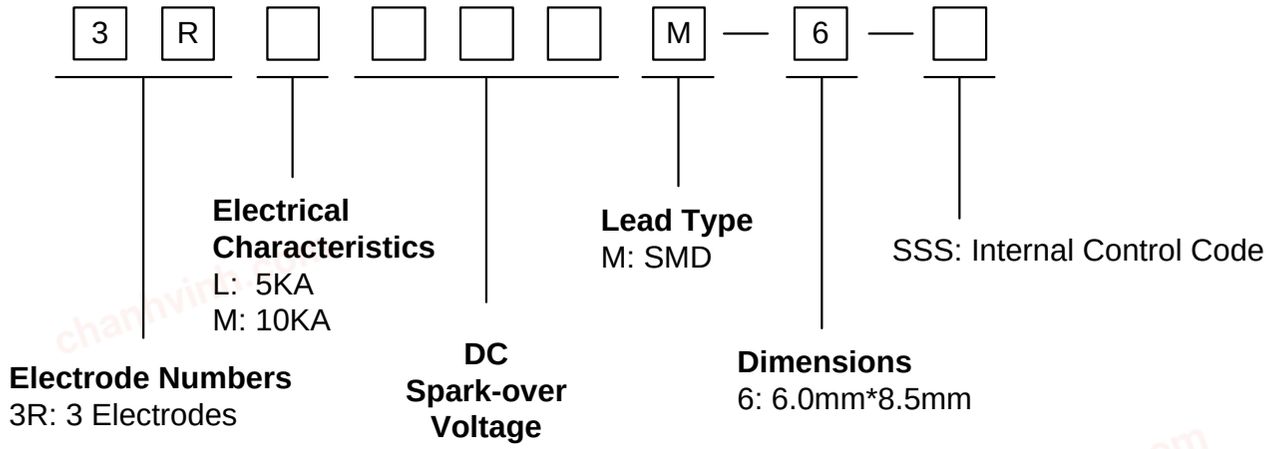

Marking

: BrightKing Logo
3RM075-6 : Device Marking Code
XXXX : Internal Control Code

chanhvinh.com

Dimensions

M Type

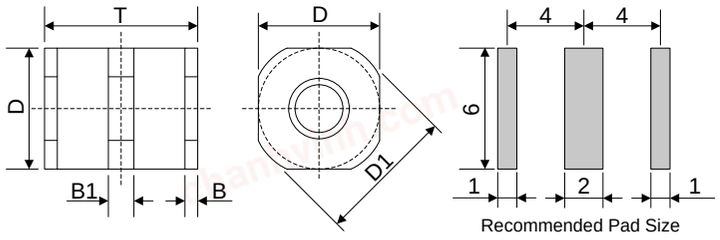

Symbol	Dimension (mm)	
	Spec.	Tolerance
D	6.0	±0.2
D1	7.0	±0.2
T	8.5	±0.5
B	0.5	±0.2
B1	1.5	±0.2

Electrical Characteristics

Part Number	Type ①	DC Spark-over Voltage	Maximum Impulse Spark-over Voltage	Nominal Impulse Discharge Current	Impulse Life	Minimum Insulation Resistance		Maximum Capacitance	Device Marking Code
		100V/s	1000V/μs	8/20μs 10times	10/1000μs 100A	Test Voltage	(GΩ)	1MHz	
		(V)	(V)	(KA)	(times)	DC(V)		(pF)	
3RL075M-6	SSS	75±20%	750	5.0	300	25	1.0	2.0	3RL075-6
3RL090M-6	SSS	90±20%	750	5.0	300	50	1.0	2.0	3RL090-6
3RL150M-6	SSS	150±20%	800	5.0	300	100	1.0	2.0	3RL150-6
3RL230M-6	SSS	230±20%	800	5.0	300	100	1.0	2.0	3RL230-6
3RL250M-6	SSS	250±20%	800	5.0	300	100	1.0	2.0	3RL250-6
3RL300M-6	SSS	300±20%	850	5.0	300	100	1.0	2.0	3RL300-6
3RL350M-6	SSS	350±20%	900	5.0	300	100	1.0	2.0	3RL350-6
3RL470M-6	SSS	470±20%	1100	5.0	300	250	1.0	2.0	3RL470-6
3RL600M-6	SSS	600±20%	1300	5.0	300	250	1.0	2.0	3RL600-6
3RM075M-6	SSS	75±20%	750	10	300	25	1.0	2.0	3RM075-6
3RM090M-6	SSS	90±20%	750	10	300	50	1.0	2.0	3RM090-6
3RM150M-6	SSS	150±20%	800	10	300	100	1.0	2.0	3RM150-6
3RM230M-6	SSS	230±20%	800	10	300	100	1.0	2.0	3RM230-6
3RM250M-6	SSS	250±20%	800	10	300	100	1.0	2.0	3RM250-6
3RM300M-6	SSS	300±20%	850	10	300	100	1.0	2.0	3RM300-6
3RM350M-6	SSS	350±20%	900	10	300	100	1.0	2.0	3RM350-6
3RM470M-6	SSS	470±20%	1100	10	300	250	1.0	2.0	3RM470-6
3RM600M-6	SSS	600±20%	1300	10	300	250	1.0	2.0	3RM600-6

Notes：① Specific code by request.

chanhvinh.com

Electrical Ratings

Items	Test Condition/Description	Requirement
DC Spark-over Voltage	The voltage is measured with voltage ramp dv/dt=100V/s. Test is between each side electrode and center electrode.	To meet the specified value
Maximum Impulse Spark-over Voltage	The maximum impulse spark-over voltage is measured with voltage ramp dv/dt=1000V/μs. Test is between each side electrode and center electrode.	
Impulse Discharge Current	Maximum surge current that can be applied through center electrode with 8/20μs waveform, for 10 times with 3min interval time, which will be equally divided between each side electrode to center electrode. 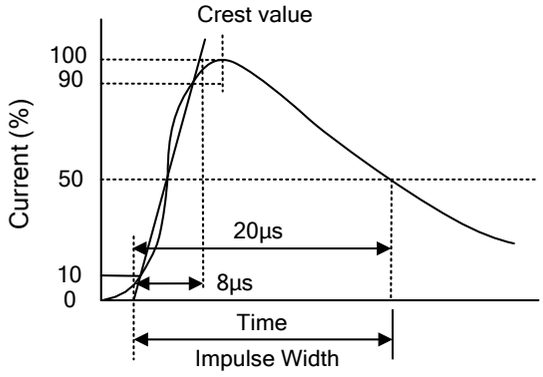	
Insulation Resistance	The resistance of gas tube shall be measured between each side electrodes and center electrode.	
Capacitance	The capacitance of gas tube shall be measured between each side electrodes and center electrode.Test frequency: 1MHz	

Recommended Soldering Conditions

Reflow Soldering

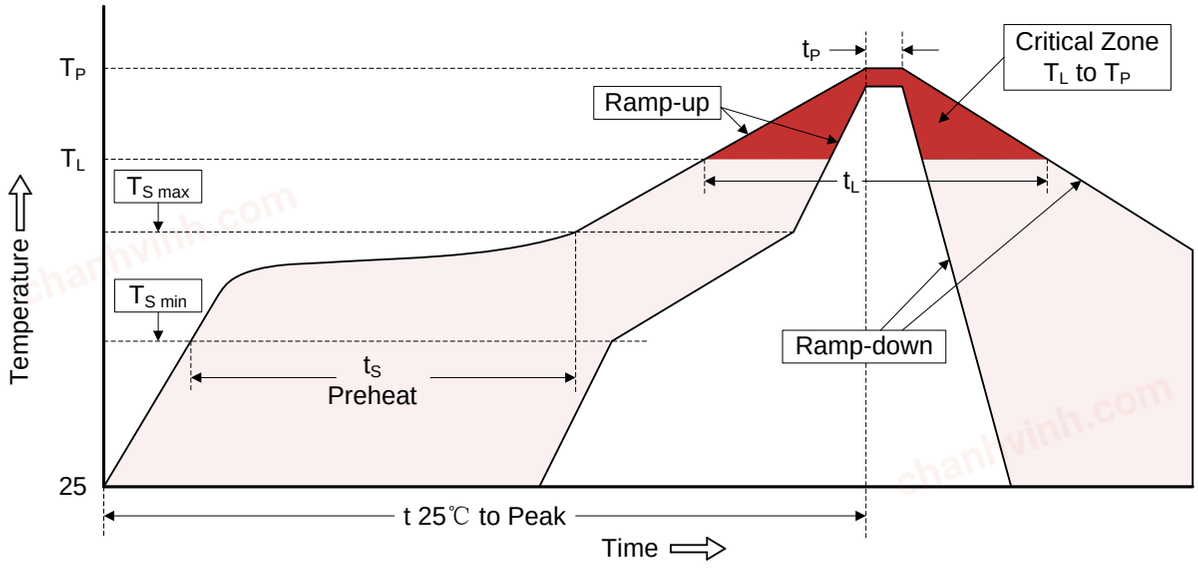

chanhvinh.com

Recommended Conditions

Profile Feature	Pb-Free Assembly
Average ramp-up rate (T_L to T_P)	3℃/second max.
Preheat -Temperature Min ($T_{S\ min}$) -Temperature Max ($T_{S\ max}$) -Time (min to max) (ts)	 150℃ 200℃ 60-180 seconds
$T_{S\ max}$ to T_L -Ramp-up Rate	 3℃/second max.
Time maintained above: -Temperature (T_L) -Time (t_L)	 217℃ 60-150 seconds
Peak Temperature (T_P)	260℃
Time within 5℃ of actual Peak Temperature (t_P)	20-40 seconds
Ramp-down Rate	6℃/second max.
Time 25℃ to Peak Temperature	8 minutes max.

Packaging

Tape

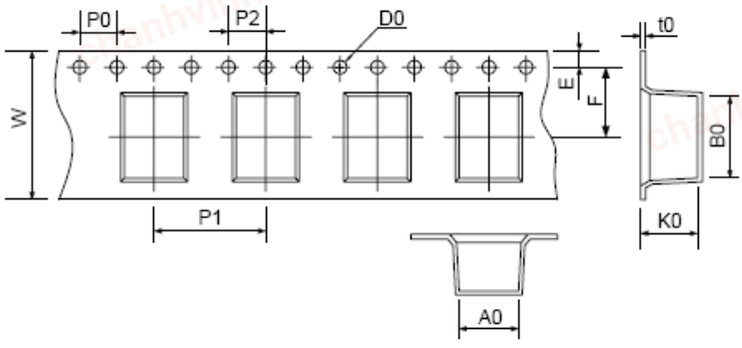

Reel

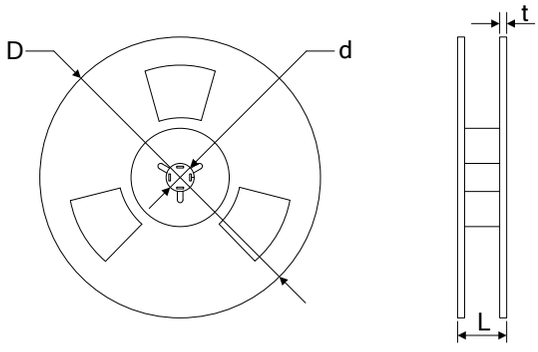

Symbol	Dimension (mm)	
	Spec.	Tolerance
W	16.00	±0.20
P0	4.00	±0.10
P1	12.00	±0.20
P2	4.00	±0.10
D0	1.55	±0.10
E	1.75	±0.10
F	7.50	±0.10
A0	6.35	±0.10
K0	6.20	±0.10
B0	8.80	±0.10
t0	0.50	±0.10
D	330.00	±1.00
d	13.00	±0.50
L	20.00	±0.50
t	2.00	±0.20

Quantity: 800pcs

chanhvinh.com

LEGAL DISCLAIMER

YAGEO, its distributors and agents (collectively, "YAGEO"), hereby disclaims any and all liabilities for any errors, inaccuracies or incompleteness contained in any product related information, including but not limited to product specifications, datasheets, pictures and/or graphics. YAGEO may make changes, modifications and/or improvements to product related information at any time and without notice.

YAGEO makes no representation, warranty, and/or guarantee about the fitness of its products for any particular purpose or the continuing production of any of its products. To the maximum extent permitted by law, YAGEO disclaims (i) any and all liability arising out of the application or use of any YAGEO product, (ii) any and all liability, including without limitation special, consequential or incidental damages, and (iii) any and all implied warranties, including warranties of fitness for a particular purpose, non -infringement and merchantability.

YAGEO products are designed for general purpose applications under normal operation and usage conditions. Please contact YAGEO for the applications listed below which require especially high reliability for the prevention of defects which might directly cause damage to the third party's life, body or property: Aerospace equipment (artificial satellite, rocket, etc.), Atomic energy-related equipment, Aviation equipment, Disaster prevention equipment, crime prevention equipment, Electric heating apparatus, burning equipment, Highly public information network equipment, data-processing equipment , Medical devices, Military equipment, Power generation control equipment, Safety equipment, Traffic signal equipment, Transportation equipment and Undersea equipment, or for any other application or use in which the failure of YAGEO products could result in personal injury or death, or serious property damage. Particularly **YAGEO Corporation and its affiliates do not recommend the use of commercial or automotive grade products for high reliability applications or manned space flight.**

Information provided here is intended to indicate product specifications only. YAGEO reserves all the rights for revising this content without further notification, as long as products are unchanged. Any product change will be announced by PCN.