chanhvinh.com

VEL05 Series

AC-DC Power Supplies

XP Power

5 Watt

- Energy Efficiency Level VI
- Barrel Jack & USB Versions
- Fixed Mains Connectors
- Universal Input
- Output Voltages from 5.0 V to 12.0 V
- Class II Construction
- Low Cost



GREEN XP POWER

The VEL05 series of wall plug adaptors comply with the very latest energy efficiency VI standards with high active mode efficiency and extremely low no load power consumption. Available with multiple USB options in addition to the standard jack plug connector these adaptors suit a wide variety of cost sensitive applications while maintaining industry leading performance.

Dimensions:

VEL (body only):
-US: 2.17 x 0.95 x 1.40" (55.1 x 24.1 x 35.49 mm)
-EU: 2.17 x 0.95 x 1.40" (55.1 x 24.1 x 35.49 mm)
-UK: 2.17 x 1.95 x 1.69" (55.1 x 49.5 x 42.9 mm)
-AU: 2.17 x 1.59 x 1.75" (55.1 x 40.44 x 44.49 mm)

Models & Ratings

Output Power	Output Voltage	Output Current	Total Regulation[2]	Efficiency	Output Connector	Model Number[4]
5 W	5.0 V	1000 mA	5%	77%	USB A in case	VEL05US050-XX-BB
	5.0 V	1000 mA	5%	74%	Mini USB B	VEL05US050-XX-MB
	5.0 V	1000 mA	5%	74%	Micro USB B	VEL05US050-XX-UB
	5.0 V	1000 mA	5%	75%	5.5 x 2.1 x 12 mm DC Jack	VEL05US050-XX-JA
	6.0 V	830 mA	5%	76%	5.5 x 2.1 x 12 mm DC Jack	VEL05US060-XX-JA[5]
	9.0 V	550 mA	5%	78%	5.5 x 2.1 x 12 mm DC Jack	VEL05US090-XX-JA
	12.0 V	420 mA	5%	79%	5.5 x 2.1 x 12 mm DC Jack	VEL05US120-XX-JA

Notes

1. *Other output voltages available, contact sales for details.*
2. *Total regulation includes initial set accuracy, line and load regulation.*
3. *Typical average of efficiencies measured at 25%, 50%, 75% and 100% load and 115 VAC input.*
4. *Replace 'XX' in model number with 'US' for US mains plug, 'UK' for UK mains plug, 'EU' for European mains plug or 'AU' for Australia mains plug.*
5. *Level V Energy Efficiency.*

Input

Characteristic	Minimum	Typical	Maximum	Units	Notes & Conditions
Input Voltage	90		264	VAC	
Input Frequency	47		63	Hz	
Input Current			0.18	A	100 VAC
Inrush Current			60	A	240 VAC, cold start at 25 °C
Power Factor					EN61000-3-2, class A
No Load Input Power			<0.1	W	
Input Protection	Internal T1.0A/250 VAC fuse				

chanhvinh.com

VEL05 Series

AC-DC Power Supplies

XP Power

Output

Characteristic	Minimum	Typical	Maximum	Units	Notes & Conditions
Output Voltage	5.0		12.0	V	See Models and Ratings table
Minimum Load	0			A	No minimum load required
Start Up Delay			4	s	
Start Up Rise Time		50		ms	
Hold Up Time		8		ms	Full load and 100 VAC
Total Regulation			5	%	See Models and Ratings table
Transient Response			4	% deviation	Recovely within <1% within 500 µs for a 50% step load change at 0.2 A/µs
Ripple & Noise			200	mV pk-pk	20 MHz bandwidth
Short Circuit Protection					Continuous, trip and restart (hiccup mode) with auto recovely
Temperature Coefficient			0.05	%/°C	

General

Characteristic	Minimum	Typical	Maximum	Units	Notes & Conditions
Efficiency	74		79	%	See Models and Ratings table
Energy Efficiency					Level VI
Isolation		3000		VAC	Input to Output
Switching Frequency	24		70	kHz	Variable
Mean Time Between Failure	100			kHrs	MIL-HDBK-217F at 25 °C GB
Weight		0.28 (80)		lb (g)	

Environmental

Characteristic	Minimum	Typical	Maximum	Units	Notes & Conditions
Operating Temperature	0		+60	°C	Derate from 100% load at 40 °C to 50% load at 60 °C
Storage Temperature	-40		+85	°C	
Operating Humidity	5		95	%	RH, non-condensing
Cooling					Natural convection
Shock					1 m drop onto concrete on each of 6 axes
Vibration	10		300	Hz	2 g 15 mins/sweep, 30 mins for each of 3 axes

EMC: Emissions

Phenomenon	Standard	Test Level	Notes & Conditions
Emission	EN55032	Level B	Conducted and Radiated.
	FCC Part 15, Subpart B		
Harmonics Current	EN61000-3-2	Class A	
Voltage Flicker	EN61000-3-3		

EMC: Immunity

Phenomenon	Standard	Test Level	Criteria	Notes & Conditions
ESD Immunity	EN61000-4-2	2,3	B	±4 kV contact, ±8 kV air
Radiated Immunity	EN61000-4-3	3 V/m	A	
EFT/Burst	EN61000-4-4	Level 2	B	
Surges	EN61000-4-5	Level 2	A	
Conducted Immunity	EN61000-4-6	3 V	A	
Magnetic Fields	EN61000-4-8	1 A/m	A	
Dips and Interruptions	EN55035 100% 10 ms, 30% 500 ms, 100% 5000 ms, Perf Criteria A, A, B			

chanhvinh.com

Safety Approvals

Phenomenon	Standard
CB Report	IEC60950-1, IEC62368-1
UL	UL/cUL60950-1, approved as limited power source (LPS)
TUV	EN60950-1, EN62368-1
CCC	China Compulsory Certification, GB4943
AU/NZ	AU/NZ 60950.1
CE	Meets all applicable directives
UKCA	Meets all applicable legislation

Mechanical Details

VEL05US-US-BB

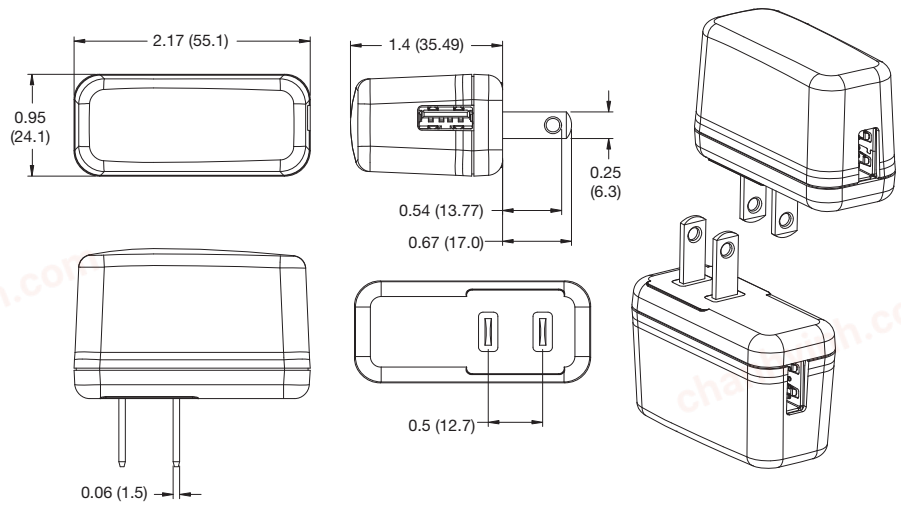

VEL05US-US-MB/UB/JA

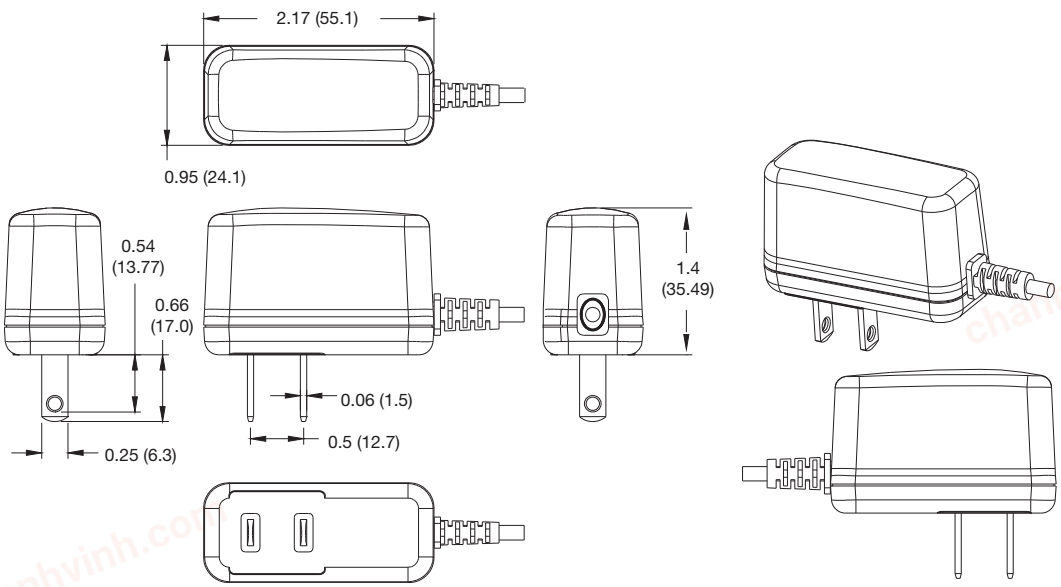

chanhvinh.com

Mechanical Details

VEL05US-UK-BB

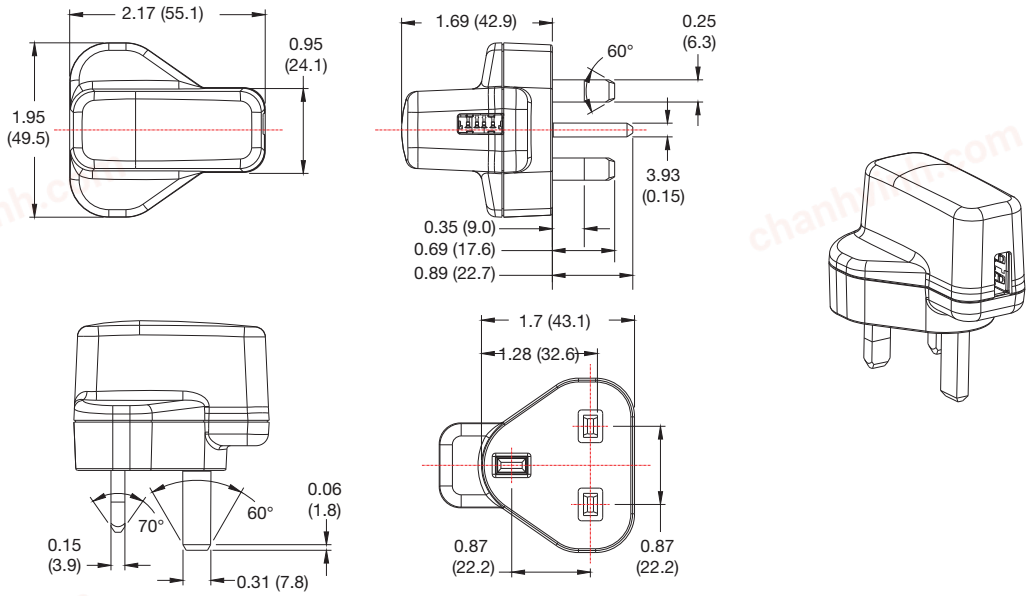

VEL05US-UK-MB/UB/JA

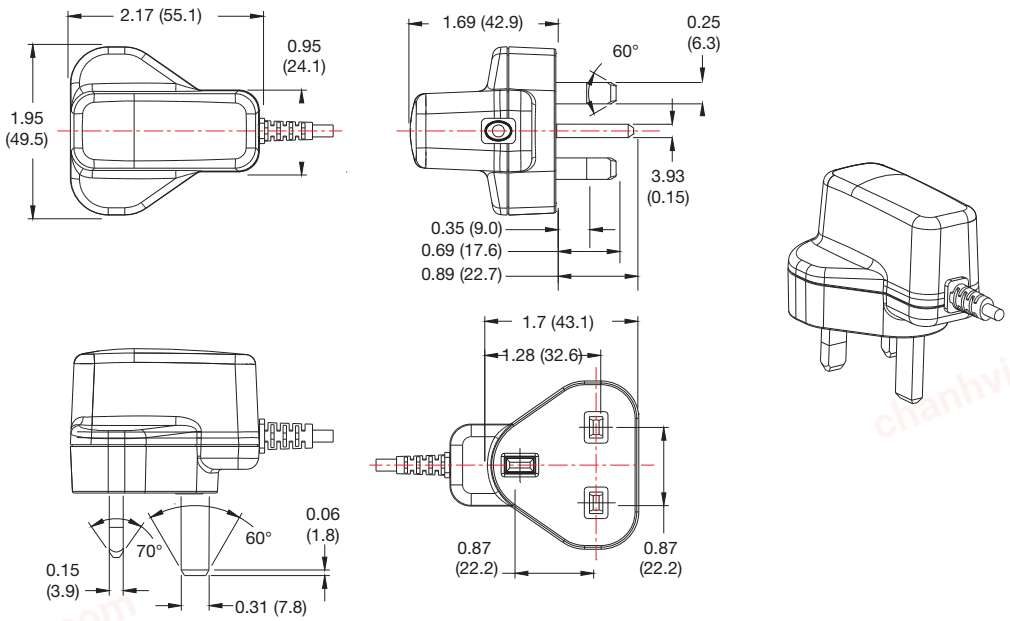

chanhvinh.com

Mechanical Details

VEL05US-EU-BB

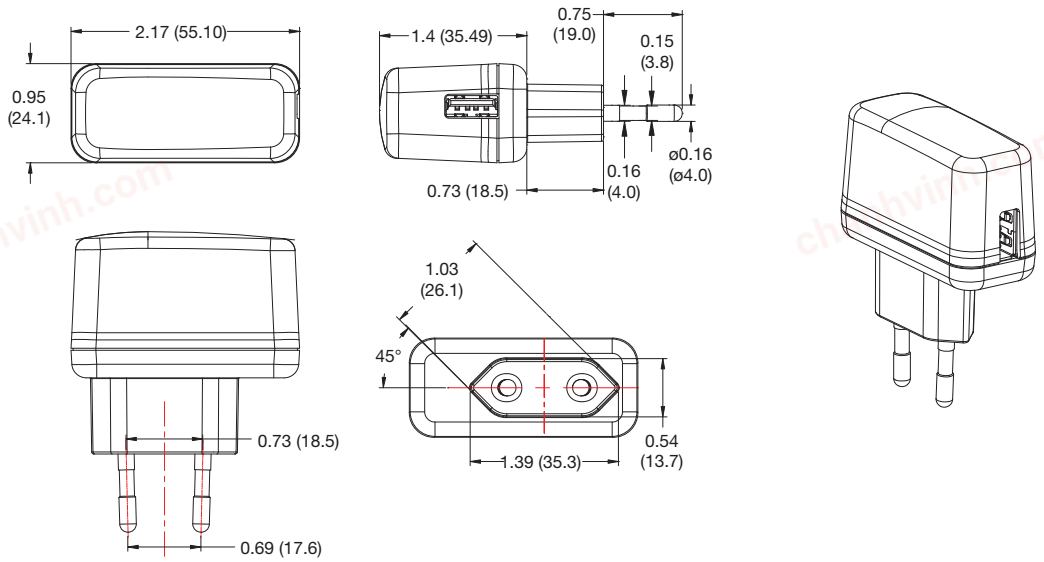

VEL05US-EU-MB/UB/JA

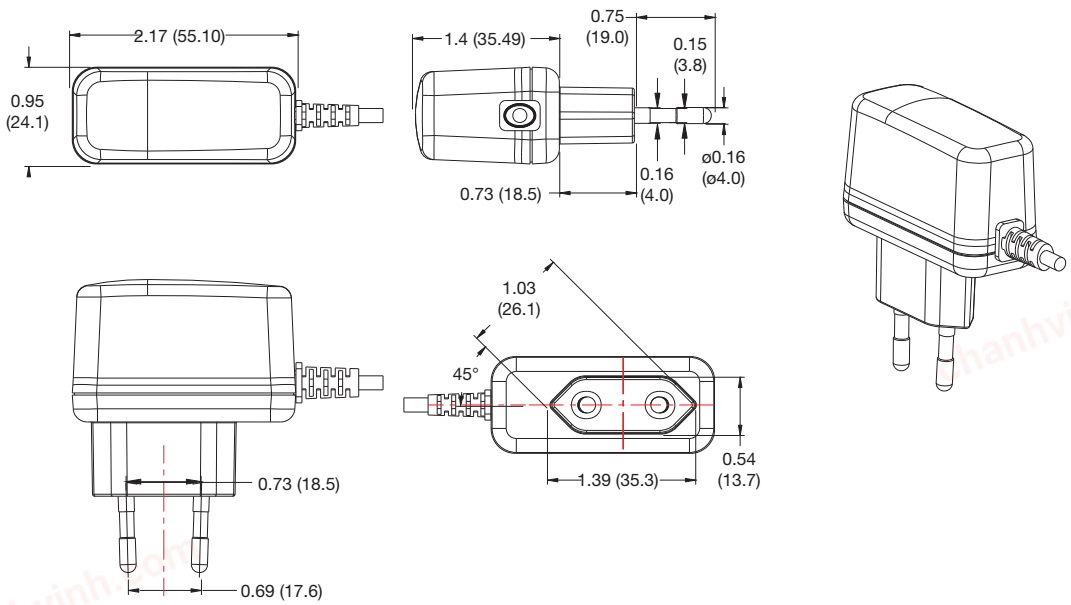

chanhvinh.com

Mechanical Details

VEL05US-AU-BB

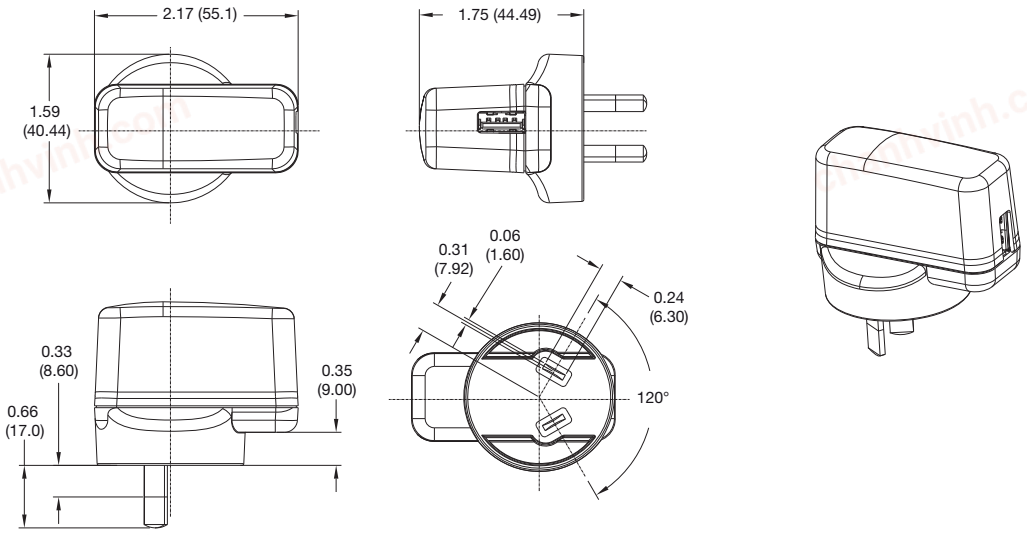

VEL05U-AU-MB/UB/JA

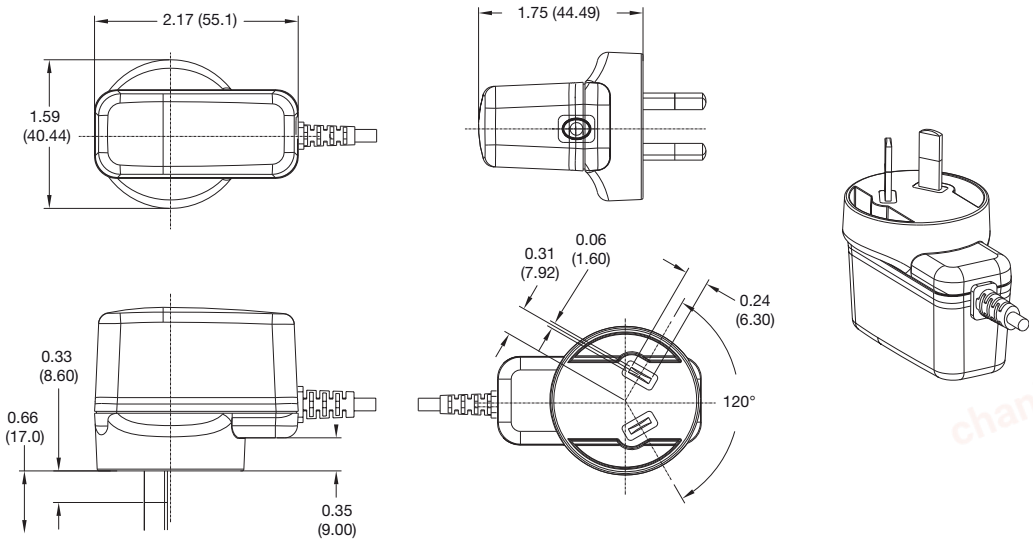

Mechanical Details

Output Lead and Connection – Mini USB Velsions (MB)

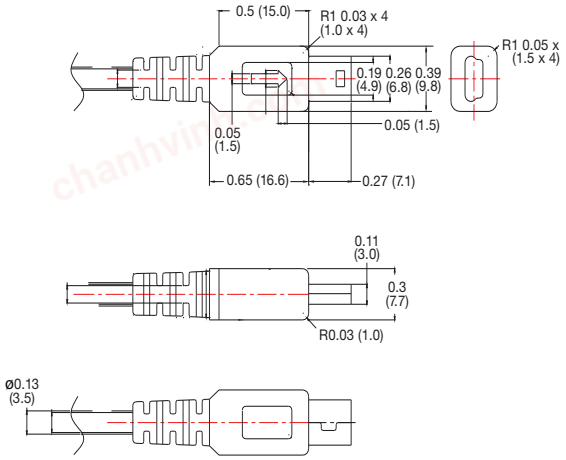

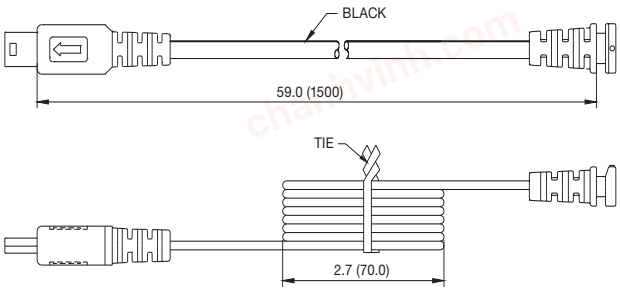

Wire type: VW-1 80°C 300 V L=1500 mm 2464 3.5ø 24 AWG black

The polarity 

Output Lead and Connection – Micro USB Velsions (UB)

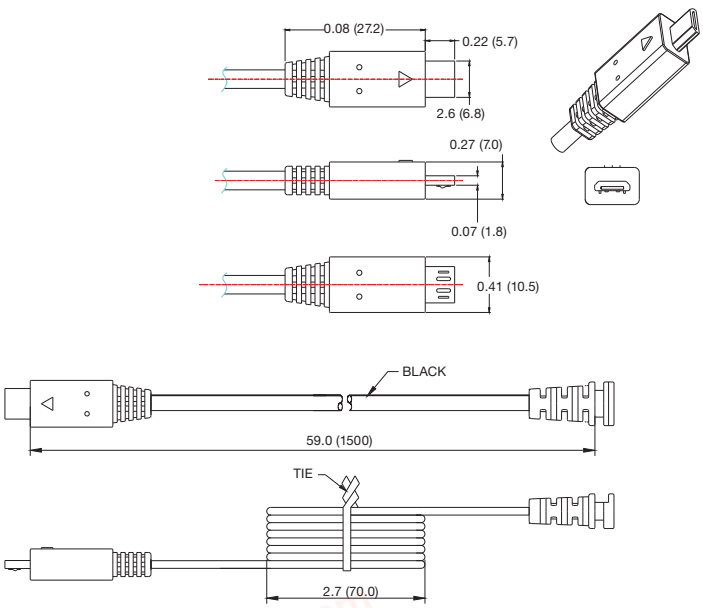

Wire type: VW-1 80°C 300 V L=1500 mm 2464 3.5ø 24 AWG black

The polarity 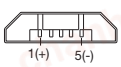

Output Lead and Connection – DC Jack Versions (JA)

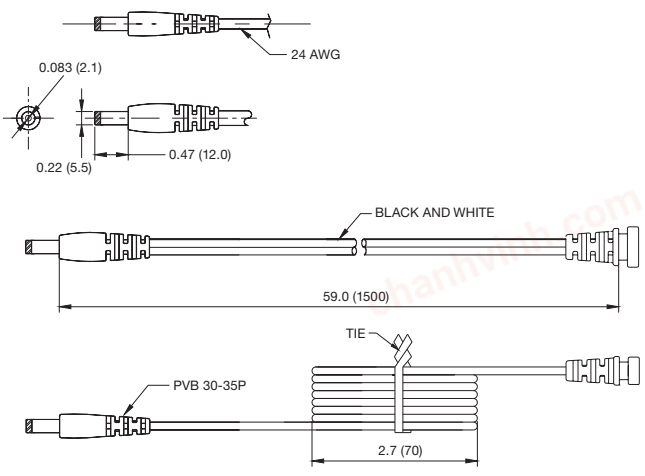

Wire type: VW-1 80°C 300 V L=1500 mm 2464 24 AWG 2C Black and White. Black - Negative, White - Positive

The polarity 