chanhvinh.com

AC–DC

250 Watts
SDR Series

xppower.com



- 3.2”x 5”Footprint
- Fits 1U Applications
- Low Leakage Current
- Up to 600 W Peak Power
- Single & Dual Outputs
- Top Fan & Convection–cooled Versions
- 3 Year Warranty

Specification

Input

Input Voltage	• 90-132 VAC/180-264 VAC, auto ranging
Input Frequency	• 47-63 Hz
Input Current	• 6 A at 115 VAC, 3 A at 230 VAC
Inrush Current	• Max 70 A at 230 VAC, 35 A at 115 VAC, cold start at 25 °C
Power Factor	• EN61000-3-2, class A
Earth Leakage Current	• <500 µA at 264 VAC/50 Hz
Input Protection	• Internal T8A/250 V fuse in line

Output

Output Voltage	• See tables
Output Voltage Trim	• ±5% on V1 (V2 of dual output models will track by same % of adjustment)
Initial Set Accuracy	• ±1%
Minimum Load	• 1% on single output models, 10% on both outputs for dual models
Start Up Delay	• 1.5 s max at 120 VAC
Start Up Rise Time	• 50 ms typical
Hold Up Time	• 20 ms min at 80% of full load
Line Regulation	• ±0.5%
Load Regulation	• ±1% 1-100% load for single outputs ±3% V1, ±7% V2 for dual outputs (except 0312 & 0512 models, ±10% regulation on V2)
Over/Undershoot	• 5% max
Transient Response	• 5% max deviation, recovery to within 1% in 500 µs for a 50% load change
Ripple & Noise	• 1% pk-pk (see note 3)
Overvoltage Protection	• <130% Vnom on output V1, recycle input to reset
Overtemperature Protection	• Measured internally with auto recovery
Overload Protection	• 110-140%
Short Circuit Protection	• Trip & restart (hiccup mode), auto recovery
Remote On/Off	• Requires a low signal to inhibit output (hiccup mode)
Fan Supply	• 12 VDC, 300 mA, not available on ‘-F’ version with built-in fan

General

Efficiency	• Single output models: 3.3 V & 5 V models 70%, 12 V models 80%, all other models >83% at 230 V & full load. Dual output models: >70% at 230 V & full load
Isolation	• 3000 VAC Input to Output 1500 VAC Input to Ground 100 VDC Output to Ground
Switching Frequency	• 29 kHz typical
Power Density	• 10.4 W/in^3
Signals	• Power Good TTL HIGH within 100-500 ms and LOW ≤1 ms before loss of regulation
MTBF	• 150 kHrs typical to MIL-HDBK-217F at 25 °C, GB

Environmental

Operating Temperature	• 0 °C to +70 °C, derate at 2.5%/ °C from +50 °C to +70 °C for single output & forced air cooled dual output models. For convection cooled dual output models, (see note 7)
Storage Temperature	• -20 °C to +85 °C
Operating Humidity	• 5-90%, non-condensing
Storage Humidity	• 5-90%, non-condensing
Cooling	• ‘-F’ version has built-in fan, others require 16 CFM to meet forced air ratings
Operating Altitude	• 3000 m
Vibration	• 5-50 Hz, acceleration 7.35 m/s^2 on X, Y and Z axis

EMC & Safety

Emissions	• EN55032 level B conducted & radiated
Harmonic Currents	• EN61000-3-2, class A
Voltage Flicker	• EN61000-3-3
ESD Immunity	• EN61000-4-2, level 3 Perf Criteria A
Radiated Immunity	• EN61000-4-3, 3 V/m Perf Criteria A
EFT/Burst	• EN61000-4-4, level 2 Perf Criteria A
Surge	• EN61000-4-5, installation class 3, Perf Criteria A
Conducted Immunity	• EN61000-4-6, 3V Perf Criteria A
Dips & Interruptions	• EN61000-4-11 30% 10 ms, 60% 100 ms, 100% 5000 ms, Perf Criteria A, B, B
Safety Approvals	• UL62368-1, CSA62368-1 via cUL, EN62368-1, CE (Meets all applicable directives), UKCA (Meets all applicable legislation)

chanhvinh.com

Models and Ratings

SDR250 XP

Output Voltage	Output Power	Output Current		Ripple & Noise Pk-Pk[2]	Model Number[3,4]
		Nominal	Peak[1]		
5 V	200 W	40.00 A	120.00 A	50 mV	SDR250AS05-F[5]
9 V	225 W	25.00 A	66.67 A	90 mV	SDR250AS09-F[5]
12 V	250 W	20.83 A	50.00 A	120 mV	SDR250AS12-F
15 V	250 W	16.70 A	40.00 A	150 mV	SDR250AS15-F
18 V	250 W	13.89 A	33.30 A	180 mV	SDR250AS18-F[5]
24 V	250 W	10.42 A	25.00 A	240 mV	SDR250AS24-F
28 V	250 W	8.93 A	21.43 A	280 mV	SDR250AS28-F[5]
36 V	250 W	6.94 A	16.67 A	360 mV	SDR250AS36-F
48 V	250 W	5.21 A	12.50 A	480 mV	SDR250AS48-F[5]
54 V	250 W	4.63 A	11.10 A	540 mV	SDR250AS54-F[5]
60 V	250 W	4.17 A	10.00 A	600 mV	SDR250AS60-F[5]

Output Voltage	Output Power	Output Current		Ripple & Noise Pk-Pk[2]	Model Number[3,4]
		Nominal	Peak[1]		
V1 : +3.3 V	200 W	24.0 A	28.8 A	50 mV	SDR250AD0312-F[5]
V2 : +12.0 V		12.0 A	14.4 A	120 mV	
V1 : +3.3 V	200 W	24.0 A	28.8 A	50 mV	SDR250AD0324-F[5]
V2 : +24.0 V		6.0 A	7.2 A	240 mV	
V1 : +5.0 V	200 W	24.0 A	28.8 A	50 mV	SDR250AD0512-F[5]
V2 : +12.0 V		12.0 A	14.4 A	120 mV	
V1 : +5.0 V	200 W	24.0 A	28.8 A	50 mV	SDR250AD0524-F[5]
V2 : +24.0 V		6.0 A	7.2 A	240 mV	
V1 : +5.0 V	200 W	24.0 A	28.8 A	50 mV	SDR250AD0548-F[5]
V2 : +48.0 V		3.0 A	3.6 A	480 mV	
V1 : +12.0 V	250 W	12.0 A	14.4 A	120 mV	SDR250AD1224-F
V2 : +24.0 V		6.0 A	7.2 A	240 mV	

Notes

1. *Peak load can be taken for 500 µs. Average power not to exceed max power.*
2. *Ripple & noise is measured using a 0.1 µF ceramic capacitor in parallel with 22 µF electrolytic and 20 MHz bandwidth.*
3. *Add suffix 'D' for optional output terminal block except the 5 V and 9 V output models which are only available with output terminal blocks.*[6]
4. *Add suffix 'E' for optional input terminal block.*[6]
5. Available for OEM quantities, contact Sales.

Mechanical Details

Enclosed with top fan (option –F)

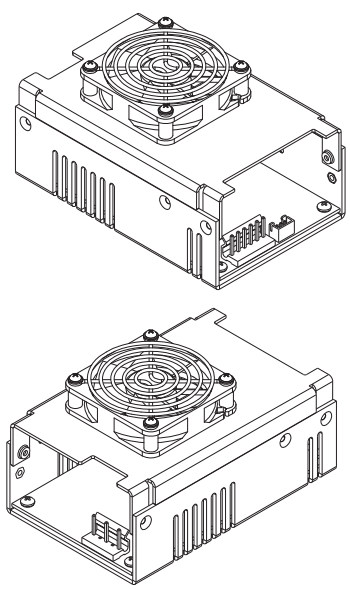

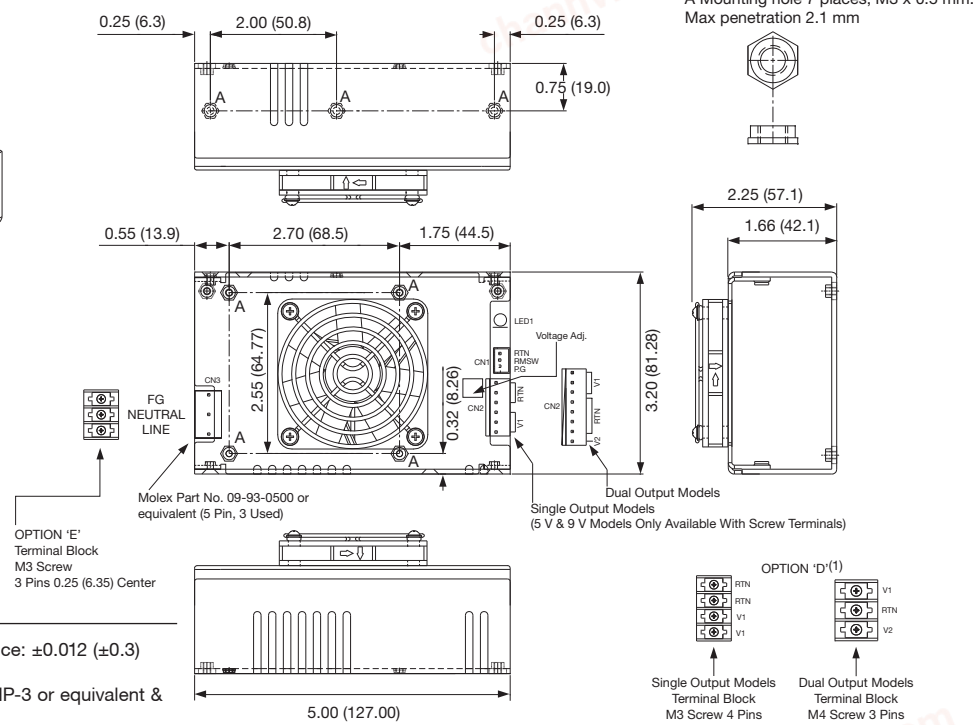

Notes

1. All dimensions are in inches (mm). Tolerance: ±0.012 (±0.3)
2. Weight: 0.95 lbs (430 g)
3. Signal connector CN1 mates with JST XHP-3 or equivalent & crimp terminals SXH-002T-P0.6.
4. Input: Molex No. 09-93-0500, crimp terminals Molex series 6838.
5. Output: Molex No. 09-93-0600 for 12 V to 60 V single output models, 09-93-0800 for dual output models, crimp terminals Molex series 6838.
6. Terminal block for 5 V to 9 V single output models.

Mechanical Details

SDR250 XP

Output Voltage	Forced-cooled		Convection-cooled		Peak Current[2]	Ripple & Noise Pk-Pk[3]	Model Number[1,4,5,6]
	Output Power	Output Current	Output Power	Output Current			
5 V	200 W	40.00 A	100 W	20.00 A	120.00 A	50 mV	SDR250AS05[8]
9 V	225 W	25.00 A	121 W	13.50 A	66.67 A	90 mV	SDR250AS09[8]
12 V	250 W	20.83 A	135 W	11.23 A	50.00 A	120 mV	SDR250AS12
15 V	250 W	16.70 A	135 W	9.00 A	40.00 A	150 mV	SDR250AS15
18 V	250 W	13.89 A	135 W	7.50 A	33.30 A	180 mV	SDR250AS18[8]
24 V	250 W	10.42 A	135 W	5.63 A	25.00 A	240 mV	SDR250AS24
28 V	250 W	8.93 A	135 W	4.82 A	21.43 A	330 mV	SDR250AS28[8]
36 V	250 W	6.94 A	135 W	3.75 A	16.67 A	360 mV	SDR250AS36
48 V	250 W	5.21 A	135 W	2.81 A	12.30 A	480 mV	SDR250AS48[8]
54 V	250 W	4.63 A	135 W	2.50 A	11.10 A	540 mV	SDR250AS54[8]
60 V	250 W	4.17 A	135 W	2.25 A	10.00 A	600 mV	SDR250AS60[8]

Output Voltage	Forced-cooled		Convection-cooled		Peak Current[2]	Ripple & Noise Pk-Pk[3]	Model Number[1,4,5,6,7]
	Output Power	Output Current	Output Power	Output Current			
V1 : +3.3 V	200 W	24.0 A	100 W	12.0 A	28.8 A	50 mV	SDR250AD0312[8]
V2 : +12.0 V		12.0 A		7.0 A	14.4 A	120 mV	
V1 : +3.3 V	200 W	24.0 A	100 W	12.0 A	28.8 A	50 mV	SDR250AD0324[8]
V2 : +24.0 V		6.0A		4.0 A	7.2 A	240 mV	
V1 : +5.0 V	200 W	24.0 A	100 W	12.0 A	28.8 A	50 mV	SDR250AD0512[8]
V2 : +12.0 V		12.0 A		7.0 A	14.4 A	120 mV	
V1 : +5.0 V	200 W	24.0 A	100 W	12.0 A	28.8 A	50 mV	SDR250AD0524[8]
V2 : +24.0 V		6.0 A		4.0 A	7.2 A	240 mV	
V1 : +5.0 V	200 W	24.0 A	100 W	12.0 A	28.8 A	50 mV	SDR250AD0548[8]
V2 : +48.0 V		3.0 A		2.0 A	3.6 A	480 mV	
V1 : +12.0 V	250 W	12.0 A	135 W	7.0 A	14.4 A	120 mV	SDR250AD1224
V2 : +24.0 V		6.0 A		4.0 A	7.2 A	240 mV	

Notes

1. *Add suffix 'L' to model number for optional 500 µA leakage current.*[8]
2. *Peak load can be taken for 500 µs. Average power not to exceed max power.*
3. *Ripple & noise is measured using a 0.1 µF ceramic capacitor in parallel with 22 µF electrolytic and 20 MHz bandwidth.*
4. *For optional vented cover add suffix '-C' to model number.*
5. *Add suffix '-D' for optional output terminal block except the 5 V and 9 V output models which are only available with output terminal blocks.*[8]
6. *Add suffix '-E' for optional input terminal block.*[8]
7. *Operating temperature - 0 °C to +60 °C, derate at 5%/ °C from 50 °C to 60 °C for convection cooled dual output models.*
8. *Available for OEM quantities, contact Sales.*

Mechanical Details

U-Channel

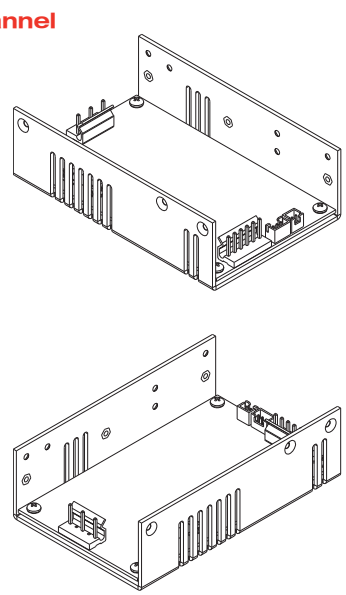

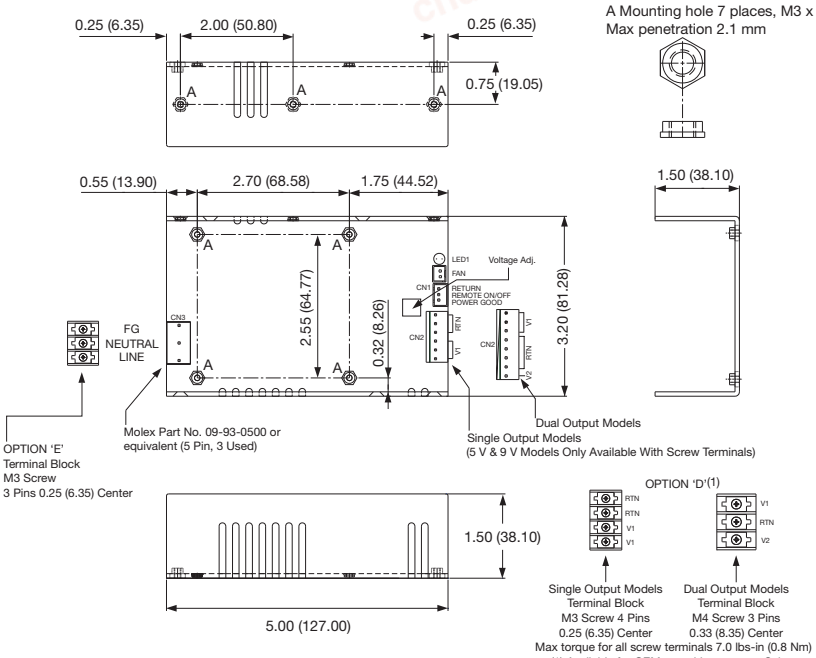

Notes

1. All dimensions are in inches (mm). Tolerance: ±0.012 (±0.3)
2. Weight: 0.88 lbs (400 g)
3. Signal connector CN1 mates with JST XHP-3 or equivalent & crimp terminals SXH-002T-P0.6.
4. Fan connector mates with JST XHP-2 or equivalent & crimp terminals.
5. Input: Molex No. 09-93-0500, crimp terminals Molex series 6838.
6. Output: Molex No. 09-93-0600 for 12 V to 60 V single output models, 09-93-0800 for dual output models, crimp terminals Molex series 6838.
7. Terminal block for 5 V to 9 V single output models.

chanhvinh.com

Mechanical Details

SDR250 XP

U-Channel with cover (Option "C")

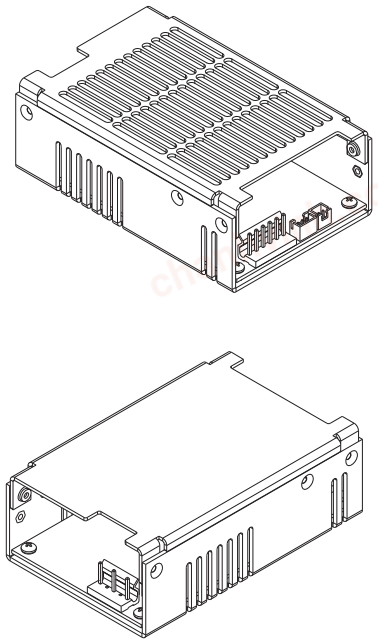

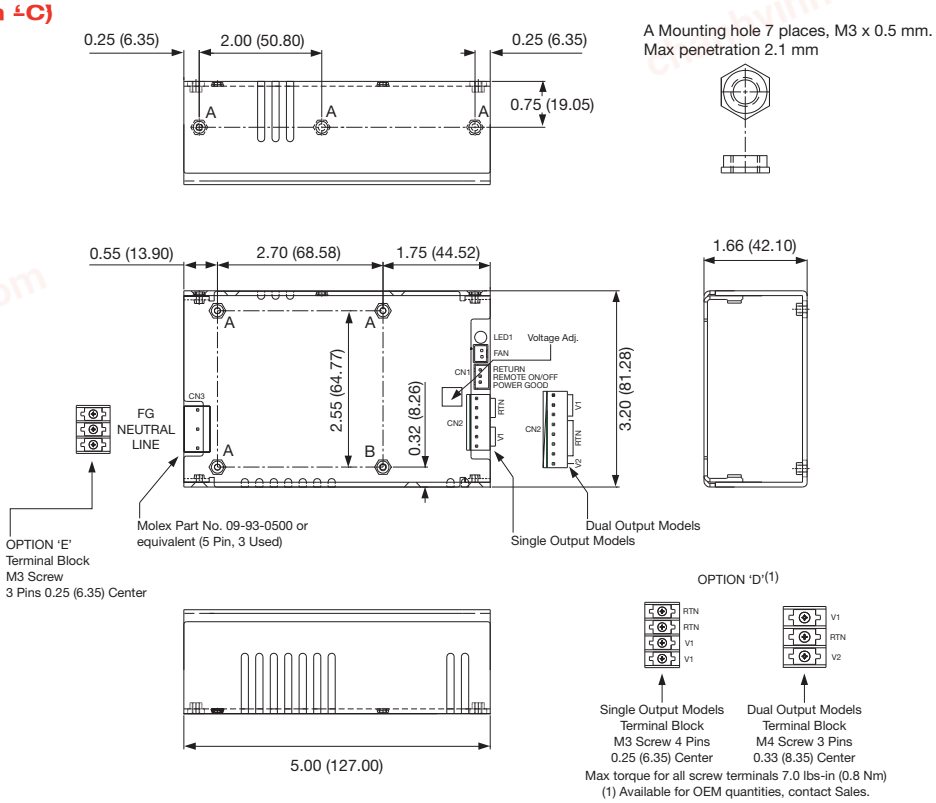

Notes

1. All dimensions are in inches (mm). Tolerance: ±0.012 (±0.3)
2. Weight: 0.93 lbs (420 g)
3. Signal connector CN1 mates with JST XHP-3 or equivalent & crimp terminals SXH-002T-P0.6.
4. Fan connector mates with JST XHP-2 or equivalent & crimp terminals.
5. Input: Molex No. 09-93-0500, crimp terminals Molex series 6838.
6. Output: Molex No. 09-93-0600 for 12 V to 60 V single output models, 09-93-0800 for dual output models, crimp terminals Molex series 6838.
7. Terminal block for 5 V to 9 V single output models

Application Notes

Remote On/Off

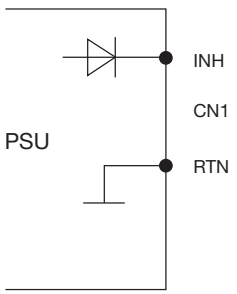

Note:
1. Applying <0.3 V or short between pins 2 and 1 turns the output OFF.
2. Applying >4.5 V or open circuit between pins 2 and 1 turns output ON.
3. The output will enter hiccup mode. Recommended maximum time is 3 minutes.

Power Good

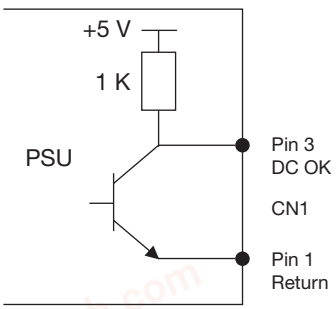

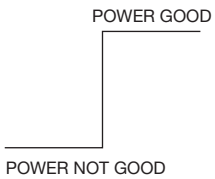

Sink current = 6 mA
Source current = 1 mA