chanhvinh.com

JCK40 series

XP Power

40W Convection cooled

DC-DC converters

The JCK40 series is housed in a 50.8 x 25.4 x 10.2 mm (2” x 1” x 0.4”) PCB mount metal case. Featuring a 2:1 input voltage range of 9 to 18VDC, 18 to 36VDC or 36 to 75VDC with regulated single outputs of 3.3, 5, 12 & 15VDC and dual outputs ±12 or ±15VDC. Single output models are adjustable ±10% with a trim resistor.

The 40W JCK40 has 1.6kVDC isolation between input and output, over voltage, overload & short circuit protection is standard as is remote On/Off, an optional heatsink can be specified. The operating temperature range is from -40°C to +85°C, with derating above +40°C.



Features

- Regulated single outputs 3.3, 5, 12 & 15VDC
- Regulated dual outputs ±12 & ±15VDC
- 2:1 input range
- 50.8 x 25.4mm (2” x 1”) footprint, 10.2mm profile
- 1.6kVDC isolation
- Single outputs trimmable ±10%
- Remote On/Off
- Continuous short circuit protection
- Optional heatsink
- -40°C to +85°C operating temperature
- Full power to +40°C
- 3 year warranty

Applications

Autonomous equipment

Industrial electronics & robotics

Technology

Dimensions

50.8 x 25.4 x 10.2mm (2.00” x 1.00” x 0.4”)

Documentation

For further information click the link or scan the code

→ xppower.com

Models & ratings

Model number	Input voltage	Output voltage	Output current	Efficiency	Input current(1)		Maximum capacitive load
					No load	Full load	
JCK4012S3V3	9-18VDC	3.3VDC	8.00A	90%	100mA	2444mA	21000µF
JCK4012S05		5.0VDC	8.00A	91%	150mA	3663mA	13000µF
JCK4012S12		12.0VDC	3.33A	91%	40mA	3663mA	2000µF
JCK4012S15		15.0VDC	2.67A	91%	50mA	3663mA	1500µF
JCK4012D12		±12.0VDC	±1.67A	91%	30mA	3663mA	±1200µF
JCK4012D15		±15.0VDC	±1.33A	92%	50mA	3623mA	±750µF

Continued on page 2

Notes:

1. Input current specified at nominal input.
2. Measured with 1µF ceramic capacitor in parallel with a 10µF electrolytic across output rails and 20MHz bandwidth.
3. For heatsink option, add ‘-HK’ to the end of the part number

chanhvinh.com

JCK40 series

DC-DC converters

Models & ratings

Model number	Input voltage	Output voltage	Output current	Efficiency	Input current[1]		Maximum capacitive load
					No load	Full load	
JCK4024S3V3	18-36 VDC	3.3VDC	8.00A	91%	60mA	1208mA	21000µF
JCK4024S05		5.0VDC	8.00A	92%	80mA	1811mA	13000µF
JCK4024S12		12.0VDC	3.33A	91%	30mA	1831mA	2000µF
JCK4024S15		15.0VDC	2.67A	92%	40mA	1811mA	1500µF
JCK4024D12		±12.0VDC	±1.67A	91%	50mA	1831mA	±1200µF
JCK4024D15		±15.0VDC	±1.33A	92%	40mA	1811mA	±750µF
JCK4048S3V3	36-75 VDC	3.3VDC	8.00A	91%	40mA	604mA	21000µF
JCK4048S05		5.0VDC	8.00A	92%	60mA	905mA	13000µF
JCK4048S12		12.0VDC	3.33A	91%	20mA	915mA	2000µF
JCK4048S15		15.0VDC	2.67A	92%	20mA	905mA	1500µF
JCK4048D12		±12.0VDC	±1.67A	92%	30mA	906mA	±1200µF
JCK4048D15		±15.0VDC	±1.33A	92%	40mA	906mA	±750µF

Notes:

1. Input current specified at nominal input.
2. Measured with 1µF ceramic capacitor in parallel with a 10µF electrolytic across output rails and 20MHz bandwidth.
3. For heatsink option, add '-HK' to the end of the part number

General

Characteristic	Minimum	Typical	Maximum	Units	Notes & conditions
Efficiency	See models & ratings table				
Isolation: input to output	1600			VDC	
Isolation: input to case	1600			VDC	
Isolation: output to case	1600			VDC	
Isolation capacitance		1000		pF	
Switching frequency		270		kHz	
Power density		3.05 (50.0)		W/cm^3 (W/in^3)	
Mean time between failure		330		kHrs	MIL-HDBK-217F, +25°C GB

Input

Characteristic	Minimum	Typical	Maximum	Units	Notes & conditions
Input voltage range	9		18	VDC	12VDC nominal
	18		36		24VDC nominal
	36		75		48VDC nominal
Input current	See models & ratings table				
Input reflected ripple current		20		mA/pk-pk	12µH inductor, 5Hz to 20MHz
Input surge			25	VDC	12VDC models (for 1000ms)
			50		24VDC models (for 1000ms)
			100		48VDC models (for 1000ms)
Undervoltage lockout	On at 8.6VDC Off at 7.9VDC				12VDC models
	On at 17.8VDC Off at 16VDC				24VDC models
	On at 33.5VDC Off at 30.5VDC				48VDC models

chanhvinh.com

JCK40 series

DC-DC converters

Output

Characteristic	Minimum	Typical	Maximum	Units	Notes & conditions
Output voltage	See models & ratings table				
Output voltage trim		±10		%	Single outputs models only
Minimum load	0			%	No minimum load required
Line regulation			±0.5	%	
Load regulation			±0.5	%	Single output
			±1		Dual outputs
Setpoint accuracy		±1		%	
Cross regulation		±5		%	
Transient response			3	%	Deviation, recovery to within 1% in <250µs for a 25% load change
Start up time		30		ms	
Ripple & noise		100		mV	For 3V3 & 5VDC models
		150			Other models
Short circuit protection	Trip & restart (hiccup mode), auto recovery				
Temperature coefficient		0.02		%/ °C	
Overload protection	115		130	%	
Remote on/off	On = Logic High (>3.0VDC) or Open				
	Off = Logic Low (<1.2VDC) or short pin 2 to 3				
Overvoltage protection		3.9		VDC	3.3VDC models
		6.2			5VDC models
		15			12VDC models
		18			15VDC models
		±15			±12VDC models
		±18			±15VDC models

Environmental

Characteristic	Minimum	Typical	Maximum	Units	Notes & conditions
Operating temperature	-40		+85	°C	Derate from 100% load at 55°C to 60% load at 85°C
Storage temperature	-40		+125	°C	
Case temperature			+105	°C	
Cooling	Convection cooled				
Operating humidity	5		95	%	RH, non condensing

chanhvinh.com

JCK40 series

DC-DC converters

Safety approvals

Safety agency	Standard	Notes & conditions
CE	Meets all applicable directives	
UKCA	Meets all applicable legislation	

Emissions - EMC

Phenomenon	Standard	Test level	Notes & conditions
Conducted	EN55022	Class B	With no external components
Radiated	EN55022	Class B	

Immunity - EMC

Phenomenon	Standard	Test level	Criteria	Notes & conditions
ESD immunity	EN61000-4-2		B	4kV contact discharge
Radiated immunity	EN61000-4-3	3V/m	A	
EFT/Burst	EN61000-4-4	1	A	External input capacitor required, 220µF/100V.
Surge	EN61000-4-5	1	A	
Conducted immunity	EN61000-4-6	3Vrms	A	
Magnetic fields	EN61000-4-8	1A/m	A	

Application notes

Derating curve

12VDC input

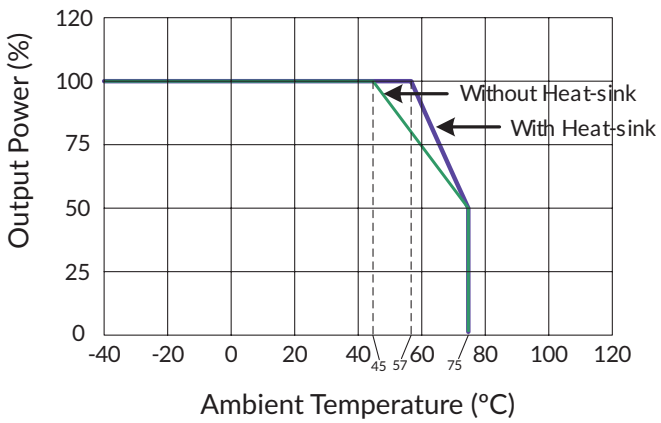

24 & 48VDC input

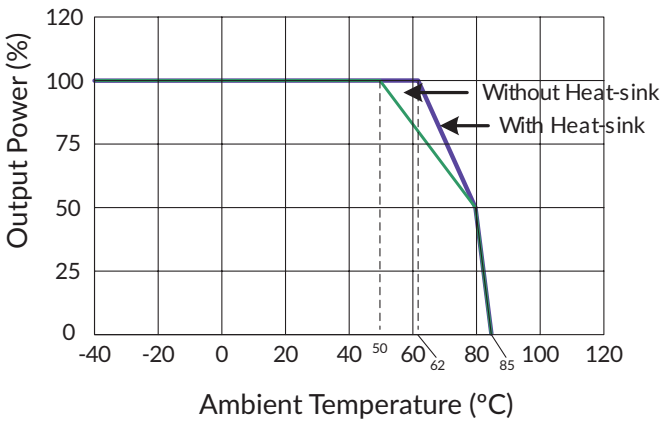

JCK40 series

DC-DC converters

Application notes

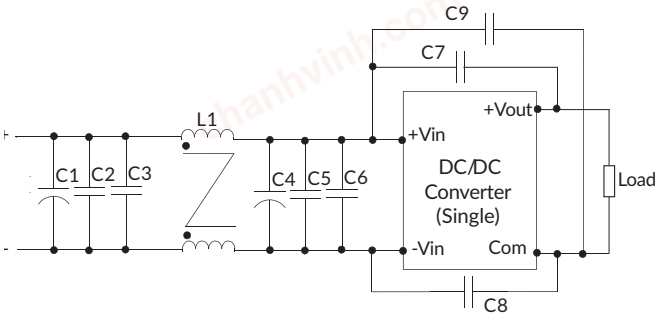

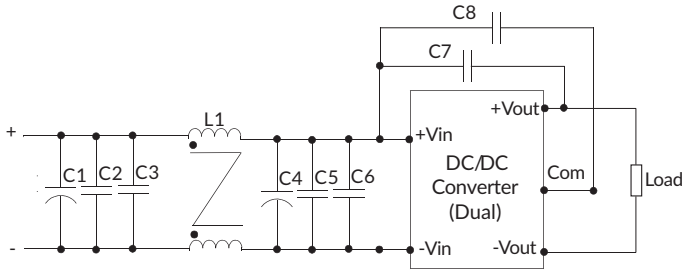

Single	C1	L1	C2/C3/C5/C6	C4
12VDC	220µF, 100V	Common Mode Choke 68µH	6.8µF, 50VDC	330µF, 100V
24VDC			4.7µF, 50VDC	220µF, 100V
48VDC			1.5µF, 100VDC	220µF, 100V

Dual	C1	L1	C2/C3/C5/C6	C4
12VDC	220µF, 100V	Common Mode Choke 68µH	6.8µF, 50VDC	330µF, 100V
24VDC			4.7µF, 50VDC	220µF, 100V
48VDC			1.5µF, 100VDC	220µF, 100V

Single	C7	C8	C9
12VDC			1000pF, 2kV
24VDC	1000pF, 2kV	1000pF, 2kV	
48VDC	1000pF, 2kV	1000pF, 2kV	

Dual	C7	C8	C9
12VDC	1000pF, 2kV	1000pF, 2kV	
24VDC	1000pF, 2kV	1000pF, 2kV	
48VDC	1000pF, 2kV	1000pF, 2kV	

External Output Trim

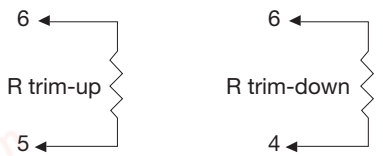

Output can be externally trimmed using this method.

Mechanical details

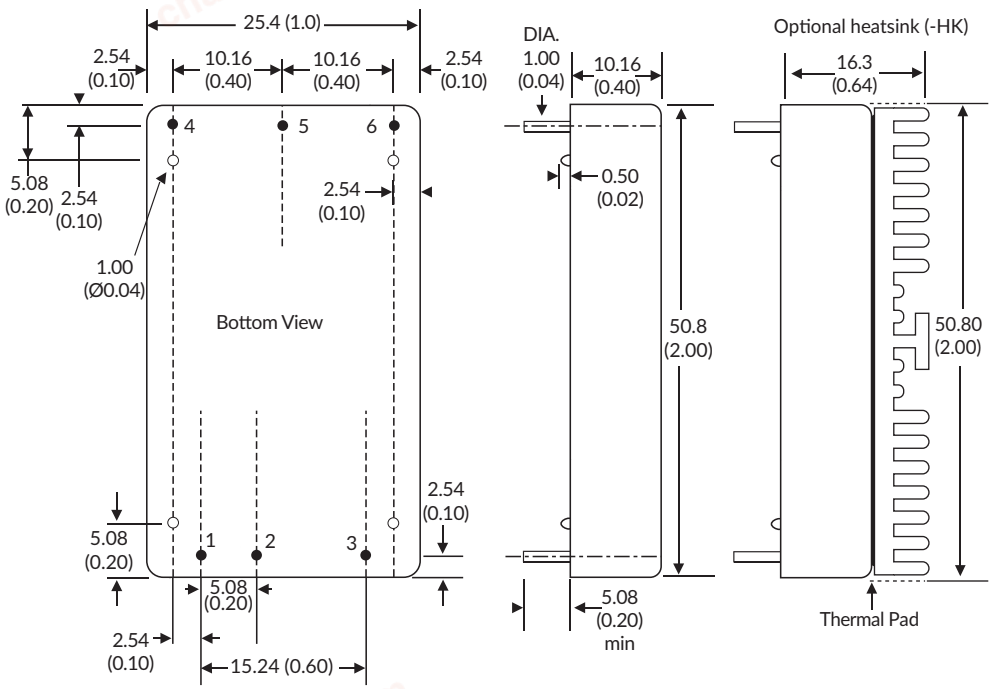

Pin connections		
Pin	Single	Dual
1	+Vin	+Vin
2	-Vin	-Vin
3	Remote On/Off	Remote On/Off
4	+Vout	+Vout
5	Com	Com
6	Trim	-Vout

Notes:

1. All dimensions are in (mm (inches).
2. Weight: 30g (0.07lbs) approx
3. Pin diameter: 1.0 ±0.05 (0.04 ±0.002)
4. Pin pitch tolerance: ±0.35 (±0.014)
5. Case tolerance: ±0.5 (±0.02)