chanhvinh.com

ITX series

XP Power

6W

DC-DC converters

The ITX series is housed in a SIP8 PCB mount plastic case. Featuring a 2:1 input voltage range of 4.5 to 9VDC, 9 to 18VDC, 18 to 36VDC or 36 to 75VDC with regulated single outputs of 3.3, 5, 12, 15 & 24VDC and dual outputs ±5, ±12 & ±15VDC.

The 6W ITX series has 1.5kVDC isolation (3kVDC optional) between input and output, short circuit protection is standard, remote On/Off is optional. The operating temperature range is from -40°C to +90°C, with derating above +65°C.



Features

- Regulated single & dual outputs
- 2:1 input range
- Single outputs 3.3 to 24VDC
- Dual outputs ±5.0 to ±15VDC
- SIP8 package
- 1.5kVDC isolation, 3.0kVDC option
- Remote On/Off option
- -40°C to +90°C operating temperature
- Full power to +65°C
- 3 year warranty

Applications

Autonomous equipment

Industrial

Technology

Dimensions

21.85 x 11.1 x 9.2mm (0.86" x 0.44" x 0.36")

Documentation

For further information click the link or scan the code

→ xppower.com

Models & ratings

Model number[1,2]	Input voltage	Output voltage	Output current	Efficiency	Input current[3]		Maximum capacitive load
					No load	Full load	
ITX0503SA	4.5-9VDC	3.3VDC	1300mA	77%	105mA	1114mA	6600µF
ITX0505SA		5.0VDC	1200mA	81%		1481mA	3300µF
ITX0509SA		9.0VDC	666mA	83%		1445mA	2000µF
ITX0512SA		12.0VDC	500mA	84%		1428mA	1600µF
ITX0515SA		15.0VDC	400mA	84%		1428mA	1400µF
ITX0524SA		24.0VDC	250mA	84%		1428mA	680µF
ITX0505S		±5.0VDC	±600mA	81%		1481mA	±2000µF
ITX0512S		±12.0VDC	±250mA	84%		1428mA	±900µF
ITX0515S		±15.0VDC	±200mA	84%		1428mA	±660µF

Continued on page 2

Notes:

1. For optional 3000VDC isolation add suffix '-H' to end of part number e.g. ITX1205SA-H.
2. For optional remote control add suffix '-R' to end of part number e.g. ITX2412S-HR.
3. Input currents measured at nominal input voltage.

chanhvinh.com

ITX series

DC-DC converters

Models & ratings

Model number	Input voltage	Output voltage	Output current	Efficiency	Input current[1]		Maximum capacitive load[2]
					No load	Full load	
ITX1203SA	9-18VDC	3.3VDC	1300mA	78%	55mA	458mA	6600µF
ITX1205SA		5.0VDC	1200mA	83%		602mA	3300µF
ITX1209SA		9.0VDC	666mA	84%		595mA	2000µF
ITX1212SA		12.0VDC	500mA	85%		588mA	1600µF
ITX1215SA		15.0VDC	400mA	85%		588mA	1400µF
ITX1224SA		24.0VDC	250mA	84%		595mA	680µF
ITX1205S		±5.0VDC	±600mA	82%		609mA	±2000µF
ITX1212S		±12.0VDC	±250mA	84%		595mA	±900µF
ITX1215S		±15.0VDC	±200mA	84%		595mA	±660µF
ITX2403SA	18-36VDC	3.3VDC	1300mA	78%	30mA	229mA	6600µF
ITX2405SA		5.0VDC	1200mA	83%		301mA	3300µF
ITX2409SA		9.0VDC	666mA	85%		294mA	2000µF
ITX2412SA		12.0VDC	500mA	85%		294mA	1600µF
ITX2415SA		15.0VDC	400mA	86%		290mA	1400µF
ITX2424SA		24.0VDC	250mA	85%		294mA	680µF
ITX2405S		±5.0VDC	±600mA	82%		304mA	±2000µF
ITX2412S		±12.0VDC	±250mA	84%		297mA	±900µF
ITX2415S		±15.0VDC	±200mA	84%		297mA	±660µF
ITX4803SA	36-75VDC	3.3VDC	1300mA	78%	15mA	114mA	6600µF
ITX4805SA		5.0VDC	1200mA	82%		152mA	3300µF
ITX4809SA		9.0VDC	666mA	84%		148mA	2000µF
ITX4812SA		12.0VDC	500mA	85%		147mA	1600µF
ITX4815SA		15.0VDC	400mA	86%		145mA	1400µF
ITX4824SA		24.0VDC	250mA	84%		148mA	680µF
ITX4805S		±5.0VDC	±600mA	82%		152mA	±2000µF
ITX4812S		±12.0VDC	±250mA	85%		147mA	±900µF
ITX4815S		±15.0VDC	±200mA	85%		147mA	±660µF

Notes:

1. For optional 3000VDC isolation add suffix '-H' to end of part number e.g. ITX1205SA-H.
2. For optional remote control add suffix '-R' to end of part number e.g. ITX2412S-HR.
3. Input currents measured at nominal input voltage.

Input

Characteristic	Minimum	Typical	Maximum	Units	Notes & conditions
Input voltage range	4.5		9	VDC	5VDC nominal
	9		18		12VDC nominal
	18		36		24VDC nominal
	36		75		48VDC nominal
Input current	See models and ratings table				
Input filter	Capacitor				
Input reflected ripple			30	mA pk-pk	Through 12µH inductor and 47µF capacitor
Input surge			15	VDC for 100ms	5VDC nominal
			25		12VDC nominal
			50		24VDC nominal
			100		48VDC nominal

chanhvinh.com

ITX series

DC-DC converters

Output

Characteristic	Minimum	Typical	Maximum	Units	Notes & conditions
Output voltage	See models and ratings table				
Output voltage balance			±2	%	Dual output models
Minimum load	0			%	No minimum load required
Initial set accuracy			±1	%	
Line regulation			±0.2	%	
Load regulation			±1	%	From 0-100%
Cross regulation			±5	%	Dual output models when one load is varied between 25% and 100% and the other is fixed at 100% load
Transient response			3	% deviation	Recovery to within 1% in 500 µs for a 25% load change (5% max. eviation for 3.3 & 5V models)
Ripple & noise			75	mV pk-pk	20MHz bandwidth, measured using 0.1µF ceramic capacitor
Short circuit protection	Continuous with auto recovery				
Temperature coefficient			0.02	%/ ˚C	
Maximum capacitive load	See models and ratings table				
Remote on/off	Optional by adding suffix -R to model number. Output off: 2-4 mA via 1KΩ resistor into pin 3 with respect to -Vin. Output on: Open or high impedance.				

General

Characteristic	Minimum	Typical	Maximum	Units	Notes & conditions
Efficiency	See models and ratings table				
Isolation: input to output			1500	VDC	For optional high isolation versions, 3000 VDC input to output add suffix -H to model number
Isolation resistance	10^9			Ω	
Isolation capacitance			50	pF	
Switching frequency	0.1		1.5	MHz	Variable
Power density		2.6 (44.0)		W/cm^3 (W/in^3)	
Mean time between failure	770			khrs	MIL-HDBK-217F, +25°C GB
Weight		4.8 (0.011)		g (lb)	

Environmental

Characteristic	Minimum	Typical	Maximum	Units	Notes & conditions
Operating temperature	-40		+90	°C	Derate from 100% load at +65°C to 20% load at 90°C, for all models except 5V and ±5V models: derate from 100% load at 55°C to 20% load at 90 °C)
Storage temperature	-55		+125	°C	
Case temperature			+105	°C	
Cooling	Natural convection				
Operating humidity			95	%	RH, non condensing

chanhvinh.com

ITX series

DC-DC converters

Safety approvals

Safety agency	Standard	Notes & conditions
UL	UL60950-1, UL62368-1	
Others	CAN/CSA C22.2 No.60950-1	
CE	Meets all applicable directives	
UKCA	Meets all applicable legislation	

Emissions - EMC

Phenomenon	Standard	Test level	Notes & conditions
Conducted	EN55032	Class A	See application notes
Radiated	EN55032	Class A	

Immunity - EMC

Phenomenon	Standard	Test level	Criteria	Notes & conditions
ESD Immunity	EN61000-4-2	3	B	
Radiated immunity	EN61000-4-3	20V/m	A	
EFT/Burst	EN61000-4-4	3	B	External input capacitor required, 330µF/100V
Surge	EN61000-4-5	2	B	External input capacitor required, 330µF/100V
Conducted immunity	EN61000-4-6	3Vrms	A	
Magnetic fields	EN61000-4-8	1A/m	A	

Application notes

EMT filter

Input filter components (C1,C2,C3,C4,C5, L) are used to help meet conducted emissions requirement for the module. These components should be mounted as close as possible to the module; and all leads should be minimized to decrease radiated noise.

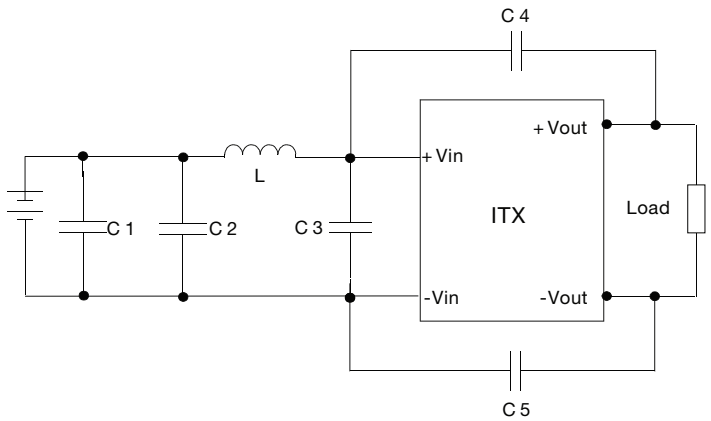

Model	C1	C2 & C3*	L	C4 & C5*
ITX05	220µF/100V	22µF/25V	10µH	220pF/3kV
ITX12		10µF/50V	10µH	220pF/3kV
ITX24		10µF/50V	10µH	220pF/3kV
ITX48		2.2µF/100V	15µH	220pF/3kV

* C2, C3, C4 & C5 are multilayer ceramic capacitors.

chanhvinh.com

ITX series

DC-DC converters

Mechanical details

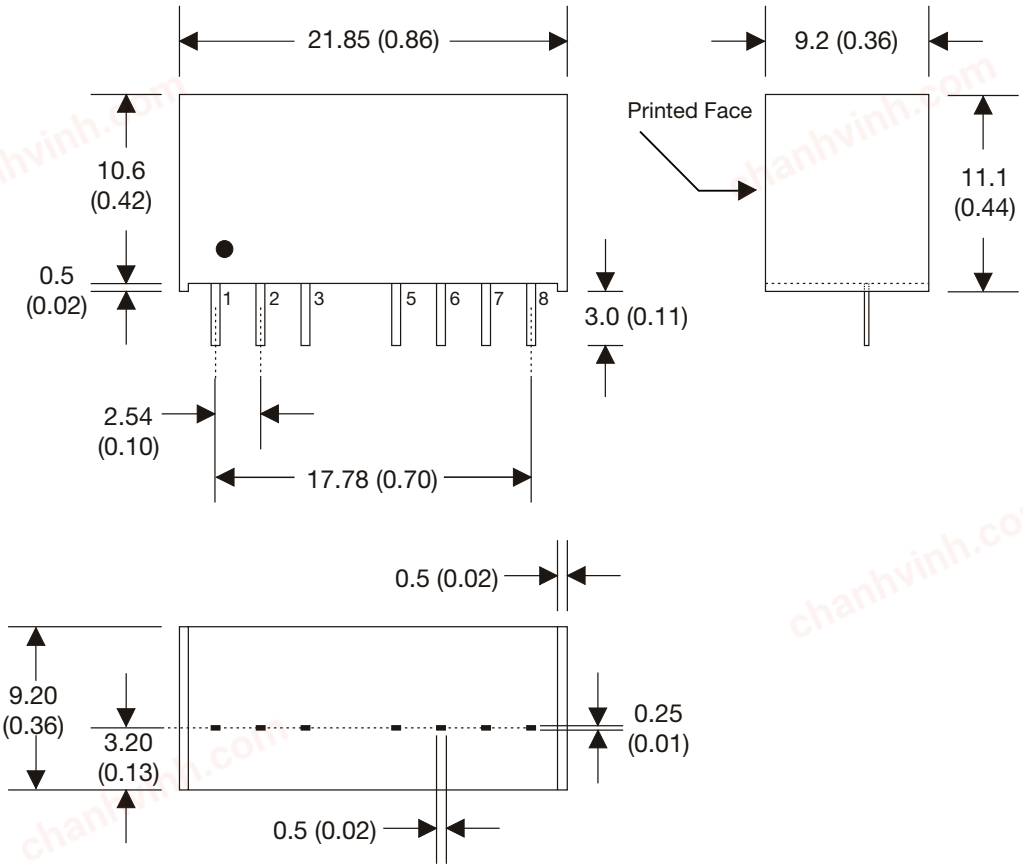

Pin connections		
Pin	Single	Dual
1	-Vin	-Vin
2	+Vin	+Vin
3	No pin	N.C.
5	No pin	N.C.
6	+Vout	+Vout
7	-Vout	Common
8	N.C.	-Vout

Pin connections		
Pin	Single -R	Dual -R
1	-Vin	-Vin
2	+Vin	+Vin
3	Remote On/Off	Remote On/Off
5	N.C.	N.C.
6	+Vout	+Vout
7	- Vout	Common
8	N.C.	-Vout

Notes:

1. All dimensions are in mm (inches)
2. Weight: 4.8 (0.011) g (lb) approx.
3. Pin pitch tolerance: ±0.35 (±0.014)
4. Pin diameter: 0.5 ±0.05 (0.02 ±0.002)
5. Case tolerance: ±0.5 (±0.02)