chanhvinh.com

ICZ09 series

XP Power

9W

DC-DC converters

The ICZ09 series offers 9 Watts in an ultra-compact metal SIP8 package that measures only 21.8 x 9.6 x 11.2mm (0.86 x 0.38 x 0.44"). They are fully regulated to within ±0.2% of line variations and ±0.5% for load changes from 0 to 100%. (dual outputs ±1.0%), they require no minimum load to maintain these specifications.

There are 3 input ranges of 9 to 18VDC for nominal 12Vin, 18 to 36VDC for 24Vin applications or 36-75VDC for nominal 48 Vin applications. Each input range offers the choice of six single outputs from 3.3 to 24VDC, and three dual output voltages with ±5, ±12 or ±15VDC.

Providing 1.6kVDC isolation, all models include a remote on/off pin to facilitate external control or sequencing. The ICZ09 range meet class A conducted emissions with external components and has protection features for input surge voltage, overload and short circuit conditions.

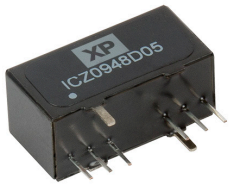

Features

- Regulated single & dual outputs
- 2:1 input range
- Single outputs 3.3 to 24VDC
- Dual outputs ±5.0 to ±15VDC
- SIP8 package
- 1.6kVDC isolation
- Remote On/Off
- No minimum load
- -40°C to +85°C operating temperature
- Full power to +60°C
- 3 year warranty

Applications

Autonomous equipment

Industrial

Technology

Dimensions

21.8 x 9.6 x 11.2mm (0.86" x 0.38" x 0.44")

Documentation

For further information click the link or scan the code

→ xppower.com

Models & ratings

Model number	Input voltage	Output voltage	Output current	Efficiency	Input current[1]		Maximum capacitive load[2]
					No load	Full load	
ICZ0912S3V3	12V (9-18 V)	3.3VDC	2000mA	81%	15mA	679mA	2600µF
ICZ0912S05		5.0VDC	1600mA	85%		784mA	1300µF
ICZ0912S09		9.0VDC	1000mA	87%		862mA	800µF
ICZ0912S12		12.0VDC	750mA	88%		852mA	560µF
ICZ0912S15		15.0VDC	600mA	89%		843mA	470µF
ICZ0912S24		24.0VDC	375mA	89%		843mA	200µF
ICZ0912D05		±5.0VDC	±800mA	85%		784mA	±800µF
ICZ0912D12		±12.0VDC	±375mA	88%		852mA	±390µF
ICZ0912D15		±15.0VDC	±300mA	89%		843mA	±200µF

Continued on page 2

Notes:

1. Input currents measured at nominal input voltage.
2. Maximum capacitive load is per output.
3. Standard tube quantity = 20

chanhvinh.com

ICZ09 series

DC-DC converters

Models & ratings

Model number	Input voltage	Output voltage	Output current	Efficiency	Input current[1]		Maximum capacitive load[2]
					No load	Full load	
ICZ0924S3V3	24V (18-36 V)	3.3VDC	2000mA	80%	15mA	344mA	2600µF
ICZ0924S05		5.0VDC	1600mA	85%		392mA	1300µF
ICZ0924S09		9.0VDC	1000mA	88%		426mA	800µF
ICZ0924S12		12.0VDC	750mA	89%		421mA	560µF
ICZ0924S15		15.0VDC	600mA	90%		417mA	560µF
ICZ0924S24		24.0VDC	375mA	90%		417mA	200µF
ICZ0924D05		±5.0VDC	±800mA	86%		388mA	±800µF
ICZ0924D12		±12.0VDC	±375mA	89%		421mA	±390µF
ICZ0924D15		±15.0VDC	±300mA	87%		431mA	±200µF
ICZ0948S3V3	48V (36-75 V)	3.3VDC	2000mA	82%	10mA	168mA	2600µF
ICZ0948S05		5.0VDC	1600mA	85%		196mA	1300µF
ICZ0948S09		9.0VDC	1000mA	88%		213mA	800µF
ICZ0948S12		12.0VDC	750mA	89%		211mA	560µF
ICZ0948S15		15.0VDC	600mA	89%		211mA	560µF
ICZ0948S24		24.0VDC	375mA	89%		211mA	200µF
ICZ0948D05		±5.0VDC	±800mA	86%		194mA	±800µF
ICZ0948D12		±12.0VDC	±375mA	87%		216mA	±390µF
ICZ0948D15		±15.0VDC	±300mA	87%		216mA	±200µF

Notes:

1. Input currents measured at nominal input voltage.
2. Maximum capacitive load is per output.
3. Standard tube quantity = 20

Input

Characteristic	Minimum	Typical	Maximum	Units	Notes & conditions
Input voltage range	9		18	VDC	12VDC nominal
	18		36		24VDC nominal
	36		75		48VDC nominal
Input filter	Capacitor				
Input reflected ripple			30	mA pk-pk	Through 12µH inductor and 47µF capacitor
Input surge			25	VDC for 100ms	12VDC models
			50		24VDC models
			100		48VDC models
Undervoltage Lockout	On at >8.9 V, Off at <7.1 V				12VDC models
	On at >16 V, Off at <13.1 V				24VDC models
	On at >33 V, Off at <30.1 V				48VDC models

chanhvinh.com

ICZ09 series

DC-DC converters

Output

Characteristic	Minimum	Typical	Maximum	Units	Notes & conditions
Output voltage	3.3		30	VDC	See models and ratings table
Minimum load	0			%	No minimum load required
Initial set accuracy			±1	%	At full load
Line regulation			±0.2	%	
Load regulation			±0.5	%	Single output from 0 to full load
			±1		3V3 and dual output from 0 to full load
Cross regulation			±5	%	On dual output models when one load is varied between 25% and 100% and other is fixed at 100%
Transient response			±5	%	For 3V3 output models
			±3		All other models, recovery within 2% in less than 2ms for a 25% load change
Ripple & noise			75	mV pk-pk	3.3-9V/12-24V. 20 MHz bandwidth. Measured using 1µF ceramic and 10 µF electrolytic capacitors
Short circuit protection	Continuous trip & restart (Hiccup mode), with auto recovery				
Temperature coefficient			0.02	%/ ˚C	
Overload protection		150		%	
Maximum capacitive load	See models and ratings table				
Remote on/off	Output is ON if remote On / Off (pin 3) is an open circuit or if the voltage on pin 3 is ≤0.1VDC Output is OFF if a voltage (max 5VDC) is applied to the remote On / Off (pin 3) with a maximum current of 4mA Note: For correct operation ensure pin 3 current is >11µA.				

General

Characteristic	Minimum	Typical	Maximum	Units	Notes & conditions
Efficiency		88		%	See models and ratings table
Isolation: input to output	1600			VDC	For 60s, insulation: functional
Isolation: input to case	1000				
Continuous working voltage: input to output			500	VDC	200Vrms
Isolation resistance	10^9			Ω	
Isolation capacitance		50		pF	
Switching frequency		400/500		kHz	12 & 24Vin/48Vin
Power density		3.9 (65.0)		W/cm³ (W/in³)	
Mean time between failure	900			khrs	MIL-HDBK-217F, +25°C GB
Case material	Copper				
Potting material	Epoxy UL94V-0				
Pin material	Solder coated phosphor bronze C519R-H				
Solder profile	260°C max, 1.5mm from case 10s max				
Water wash	Use deionized water, do not soak. Dry thoroughly.				
Weight		7.3 (0.016)		g (lb)	

Environmental

Characteristic	Minimum	Typical	Maximum	Units	Notes & conditions
Operating temperature	-40		+85	°C	Derate from 100% load at +60°C to no load at +85°C. Derate from 100% load at +50°C to no load at +85°C for 3V3 output models.
Storage temperature	-55		+125	°C	
Case temperature			+100	°C	
Cooling	Natural convection				
Operating humidity			95	%	RH, non condensing

chanhvinh.com

ICZ09 series

Safety approvals

Safety agency	Standard	Notes & conditions
UL	UL/cUL60950-1, 62368-1	
CE	Meets all applicable directives	
UKCA	Meets all applicable legislation	

Emissions - EMC

Phenomenon	Standard	Test level	Notes & conditions
Conducted	EN55032	Class A	See application notes
Radiated	EN55032	Class A	

Immunity - EMC

Phenomenon	Standard	Test level	Criteria	Notes & conditions
ESD Immunity	EN61000-4-2	±6kV	A	Contact
		±8kV		Air
Radiated immunity	EN61000-4-3	20V/m	A	
EFT/Burst	EN61000-4-4	±2kV	A	See application notes
Surge	EN61000-4-5	±2kV	A	See application notes
Conducted immunity	EN61000-4-6	10Vrms	A	
Magnetic fields	EN61000-4-8	100A/m	A	

Application notes

Derating curve

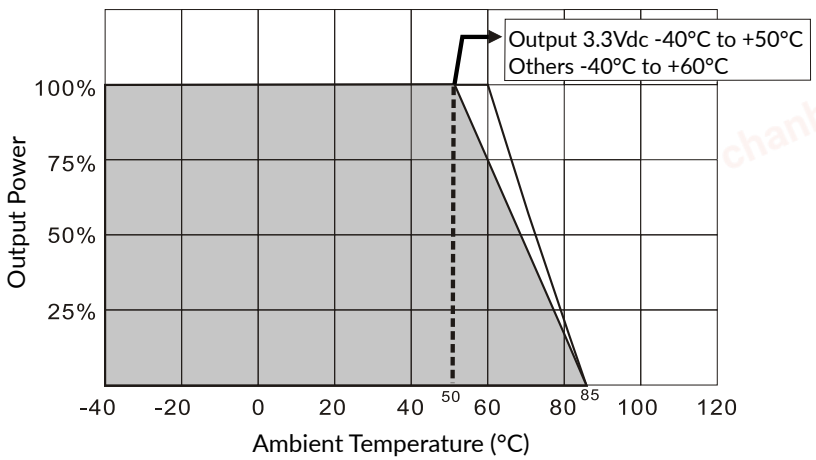

chanhvinh.com

ICZ09 series

DC-DC converters

EMI Filter

12V & 24V models

Single output models

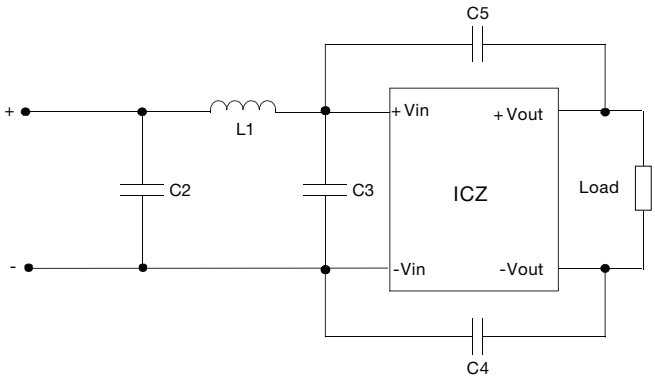

Dual output models

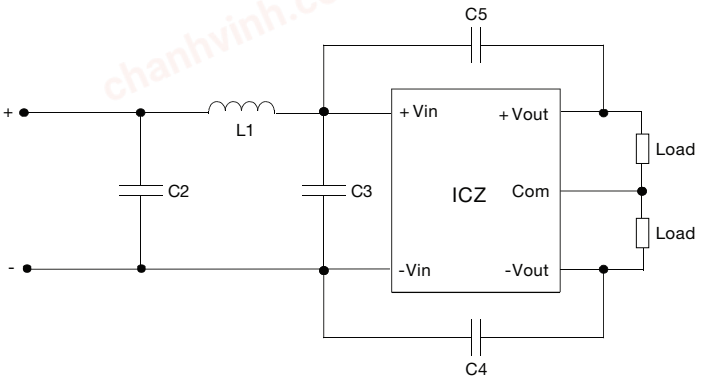

Model	C2	C3	C4	C5	L1
12Vin	MLCC 10µF/35V		MLCC 1000pF/3kV	MLCC 1000pF/3kV	3.3µH
24Vin	MLCC 4.7µF/100V	MLCC 4.7µF/100V		MLCC 1000pF/3kV	10µH

48V models

Single output models

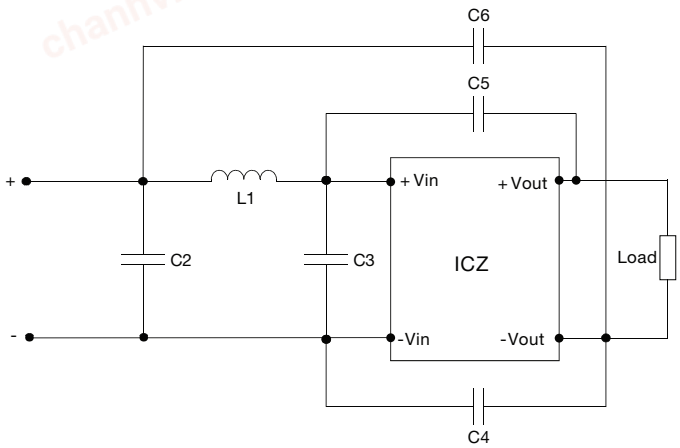

Dual output models

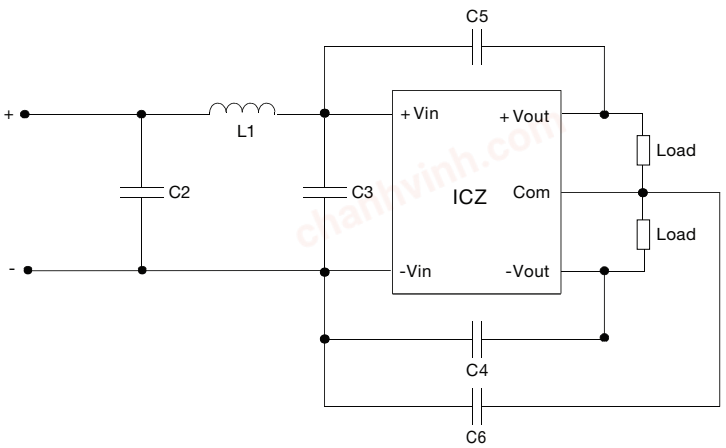

Model	C2	C3	C4	C5	C6	L1
48Vin	MLCC 4.7µF/100V	MLCC 4.7µF/100V	MLCC 1000pF/3kV	MLCC 1000pF/3kV	MLCC 220pF/3kV	10µH

chanhvinh.com

ICZ09 series

DC-DC converters

Application notes

EFT/Surge Filter

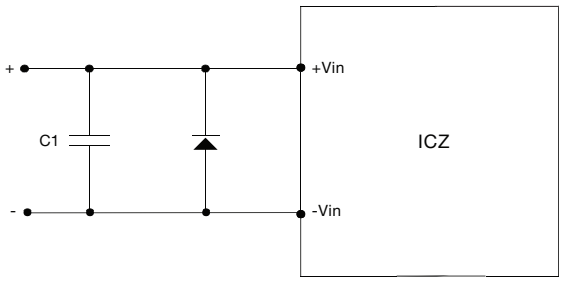

Model	C1	D1
12Vin	330µF, 100V	TVS, 3kW, 26V
24Vin	330µF, 100V	TVS, 3kW, 70V
48Vin	330µF, 100V	TVS, 3kW, 120V

C1 suggested series Nippon Chemicon KY

Mechanical details

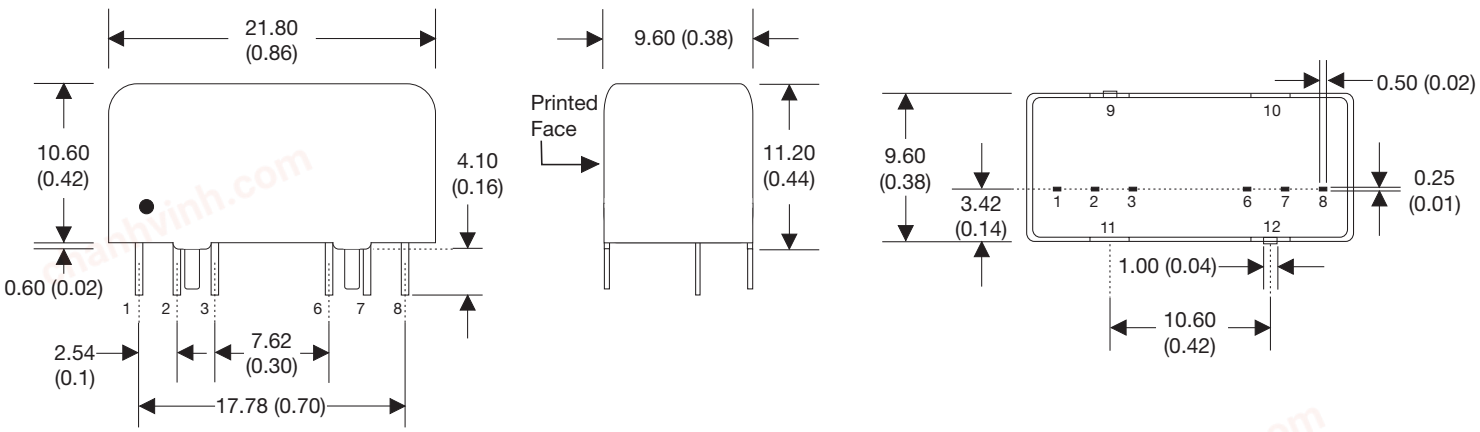

Pin connections		
Pin	**Single**	**Dual**
1	-Vin	-Vin
2	+Vin	+Vin
3	Remote On/Off	Remote On/Off
6	+Vout	+Vout
7	-Vout	Common
8	No Connection	-Vout
9	Case	Case
10	Stand Off	Stand Off
11	Stand Off	Stand Off
12	Case	Case

Notes:

1. All dimensions are in mm (inches)
2. Weight: 7.3g (0.016lbs) approx.
3. Pin diameter: 0.5±0.05 (0.02±0.002)
4. Pin pitch tolerance: ±0.35 (±0.014)
5. Case tolerance: ±0.5 (±0.02)