chanhvinh.com

FS series

XP Power

10W

DC-HVDC converter

The FS Series is an isolated, proportional DC to high voltage DC converter offering stout design and enhanced features for excellent long-term reliability. A proprietary, quasi-sinewave, resonant oscillator produces clean high voltage with inherently low ripple, low EMI/RFI, low input ripple current, and low conducted emissions. The internal transformer temperature and input voltage are actively monitored with supervisory circuits and fed into a shutdown circuit, preventing excessive input voltage or over-temperature failures.

This series features sturdy, galvanic input-to-output high voltage isolation, conservatively rated at 2.5kV above the maximum output potential (±2.5kV + Vout), with less than 100pF of coupling capacitance and less than 100nA of leakage current. Robustness and high reliability have been designed into each model by incorporating output arc surge current limiting and short circuit protection.

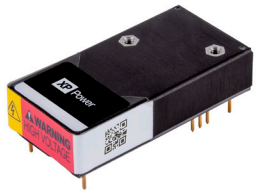

Features

- Output voltages up to 6kVDC
- Output voltage proportional to input
- Low turn on voltage: <0.7VDC
- Input to output isolation 2.5kVDC + Vout
- Dual output option
- 12, 15, 24 & 28VDC input models
- Arc & short circuit protected
- Overtemperature & overvoltage protection, auto shutdown
- Low profile 12.5mm (0.5")
- MTBF> 840khrs
- -25°C to +75°C operating case temperature
- -55°C to +85°C extended operating range option
- 3 year warranty

Applications

- Mass Spectrometry
- Electrostatic Chucks
- Electrophoresis
- Capacitor Charging
- Particle Counter
- Isolation Testing
- Medical Laser Treatment

Dimensions

28.5 x 57.15 x 12.7mm (1.12" x 2.25" x 0.50")

Documentation

For further information click the link or scan the code

→ xppower.com

Models & ratings

Model number	Output voltage	Output current	Ripple	Polarity	Input voltage	Input current, no load	Input current, full load
FS02-12	0 to 200VDC	50mA	<6%	Reversible	12VDC	<300mA	<1.25A
FS02-24BT	0 to 200VDC	50mA	<6%	Reversible	24VDC	<150mA	<650mA

Cont. on page 2

Notes:

1. All orderable part numbers are listed in the models and ratings table.
2. B Suffix is used for models without SMART protection features described on page 2.
3. T Suffix indicates extended operating temperature, see page 2 Environmental.
4. CT indicates center tap pin for dual output.
5. Maximum rated output current is available at maximum rated output voltage.
6. Output voltage is load dependent. Under light or no-load conditions, reduce the input voltage so maximum rated output voltage is not exceeded.
7. Specifications after 1 hour warm-up, full load, at 25°C unless otherwise indicated.
8. Maximum output power is typically proportional to input voltage from 40% of input voltage to maximum.
9. Short circuit protection not available with -B suffix.
10. Proper thermal management techniques are required to maintain safe case temperature at maximum power output.
11. Ripple specification for center-tapped units applies to the voltage between the positive and negative output terminals.
8. Models FS50 and FS60 do not have the arc protection feature.

FS series

DC-HVDC converter

Models & ratings

Model number	Output voltage	Output current	Ripple	Polarity	Input voltage	Input current, no load	Input current, full load
FS02CT-15	0 to ±100VDC	50mA	<6%	Bipolar	15VDC	<250mA	<1.15A
FS03-12	0 to 300VDC	33.3mA	<2%	Reversible	12VDC	<300mA	<1.25A
FS05-12	0 to 500VDC	20mA	<2%	Reversible	12VDC	<300mA	<1.25A
FS05-15	0 to 500VDC	20mA	<2%	Reversible	15VDC	<250mA	<1.15A
FS05-24	0 to 500VDC	20mA	<2%	Reversible	24VDC	<150mA	<650mA
FS05-24B	0 to 500VDC	20mA	<2%	Reversible	24VDC	<150mA	<650mA
FS05CT-12	0 to ±250VDC	20mA	<2%	Bipolar	12VDC	<300mA	<1.25A
FS05CT-24	0 to ±250VDC	20mA	<2%	Bipolar	24VDC	<150mA	<650mA
FS10-12	0 to 1kVDC	10mA	<1%	Reversible	12VDC	<300mA	<1.25A
FS10-12B	0 to 1kVDC	10mA	<1%	Reversible	12VDC	<300mA	<1.25A
FS10-12BT	0 to 1kVDC	10mA	<1%	Reversible	12VDC	<300mA	<1.25A
FS10-24	0 to 1kVDC	10mA	<1%	Reversible	24VDC	<150mA	<650mA
FS10CT-12	0 to ±500VDC	10mA	<1%	Bipolar	12VDC	<300mA	<1.25A
FS20-12	0 to 2kVDC	5mA	<2.5%	Reversible	12VDC	<300mA	<1.25A
FS20-15	0 to 2kVDC	5mA	<2.5%	Reversible	15VDC	<250mA	<1.15A
FS20CT-12T	0 to ±1kVDC	5mA	<2.5%	Bipolar	12VDC	<300mA	<1.25A
FS20CT-24	0 to ±1kVDC	5mA	<2.5%	Bipolar	24VDC	<150mA	<650mA
FS30-12	0 to 3kVDC	3.33mA	<2%	Reversible	12VDC	<300mA	<1.25A
FS30-24B	0 to 3kVDC	3.33mA	<2%	Reversible	24VDC	<150mA	<650mA
FS40-12	0 to 4kVDC	2.5mA	<1.5%	Reversible	12VDC	<300mA	<1.25A
FS50P-12	0 to +5kVDC	2mA	<2.5%	Positive	12VDC	<400mA	<1.5A
FS50P-24	0 to +5kVDC	2mA	<2.5%	Positive	24VDC	<200mA	<750mA
FS50P-24B	0 to +5kVDC	2mA	<2.5%	Positive	24VDC	<200mA	<750mA
FS60N-12B	0 to -6kVDC	1.67mA	<2.5%	Negative	12VDC	<400mA	<1.5A
FS60P-12	0 to +6kVDC	1.67mA	<2.5%	Positive	12VDC	<400mA	<1.5A
FS60P-12B	0 to +6kVDC	1.67mA	<2.5%	Positive	12VDC	<400mA	<1.5A
FS60P-24B	0 to +6kVDC	1.67mA	<2.5%	Positive	24VDC	<200mA	<750mA

Notes:

1. All orderable part numbers are listed in the models and ratings table.
2. B Suffix is used for models without SMART protection features described on page 2.
3. T Suffix indicates extended operating temperature, see page 2 Environmental.
4. CT indicates center tap pin for dual output.
5. Maximum rated output current is available at maximum rated output voltage.
6. Output voltage is load dependent. Under light or no-load conditions, reduce the input voltage so maximum rated output voltage is not exceeded.
7. Specifications after 1 hour warm-up, full load, at +25°C unless otherwise indicated.
8. Maximum output power is typically proportional to input voltage from 40% of input voltage to maximum.
9. Short circuit protection not available with -B suffix.
10. Proper thermal management techniques are required to maintain safe case temperature at maximum power output.
11. Ripple specification for center-tapped units applies to the voltage between the positive and negative output terminals.
8. Models FS50 and FS60 do not have the arc protection feature.

chanhvinh.com

FS series

DC-HVDC converter

Input

Characteristic	Minimum	Typical	Maximum	Units	Notes & conditions
Input voltage	0.7		12, 15, 24, 28	VDC	See models & ratings table
Input current			1.5	A	See models & ratings table

Output

Characteristic	Minimum	Typical	Maximum	Units	Notes & conditions
Output voltage			6000	VDC	See models & ratings table
Output current			50	mA	See models & ratings table
Output voltage tolerance		±5		%	At Max Vout, Full load
Minimum load	No minimum load required				
Regulation	Unregulated, Output is proportional to Input. See Application Notes				
Short circuit protection	Protected against short circuit conditions indefinitely. B versions not included				
Ripple and noise	1		6	%	See Models & Ratings table

General

Characteristic	Minimum	Typical	Maximum	Units	Notes & conditions
Isolation: input to output			2500	V	2.5kVDC + Vout; ±2.5kVDC Bias on Pin 4
Leakage current			100	nA	
Switching frequency	25		125	kHz	Stable frequency over entire output voltage range
Construction	Solid vacuum encapsulation, UL 94 V-0 rated. Anodized aluminum heatsink surface, two threaded blind inserts				
Mean time between failure	840			khrs	Bellcore TR 332

Environmental

Characteristic	Minimum	Typical	Maximum	Units	Notes & conditions
Operating temperature (case)	-25		+75	°C	Standard operating temperature
Operating temperature (case)	-55		+85	°C	Extended operating temperature, -T models
Storage temperature	-55		+105	°C	
Cooling	Natural convection				
Humidity			95	%RH	Non-condensing

FS series

DC-HVDC converter

Application notes

Block diagram

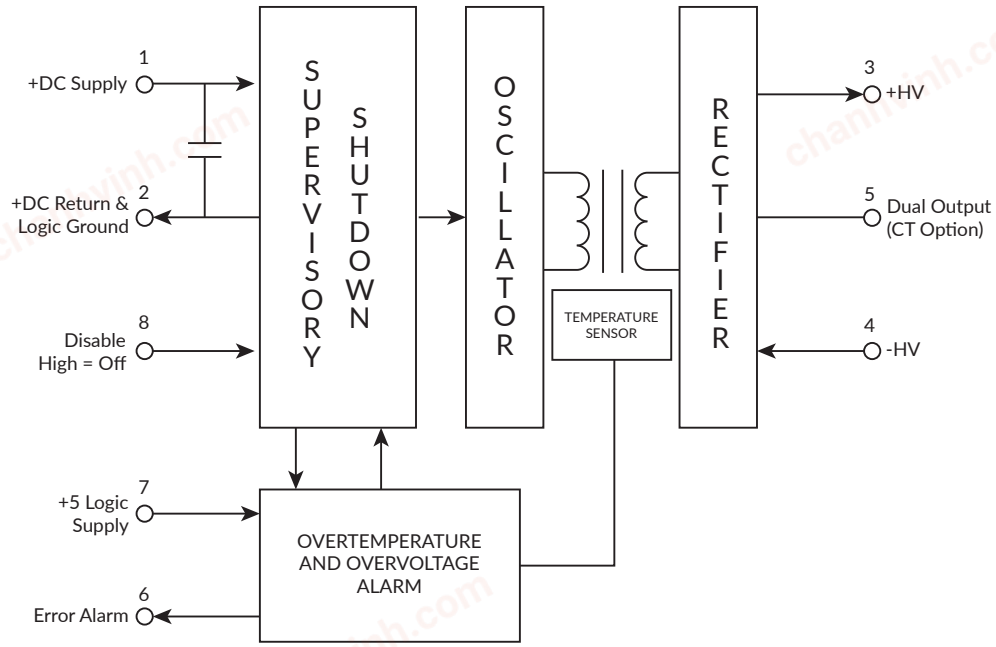

SMART Protection Features

The FS Series power supplies are provided with internal input over-voltage and over-temperature protection. The internal transformer temperature and input voltage are actively monitored with supervisory circuits and fed into a shutdown circuit, preventing excessive input voltage or over-temperature failures. Should preset limits be exceeded, the power supply will be temporarily disabled. A TTL-compatible, latching alarm signal on Pin 6 transitions from low to high to indicate an alarm condition has occurred. Sustained presence of an input over-voltage may damage input components. The user should respond to the alarm by removing the potentially damaging input.

If/when the fault condition is removed, the unit will recover and restore itself to normal operation, ensuring maximum reliability in the field. However, the pin 6 error signal will remain high to indicate an alarm event has occurred. To clear the alarm output, the +5V logic input must be toggled low for >250ms, then returned high.

The fault monitor circuits are powered by the +5V logic input voltage and draw <25mA.

SMART Protection features are not included with B suffix.

FS series

DC-HVDC converter

Application notes

FS02-FS40 Positive Output for Reversible Models

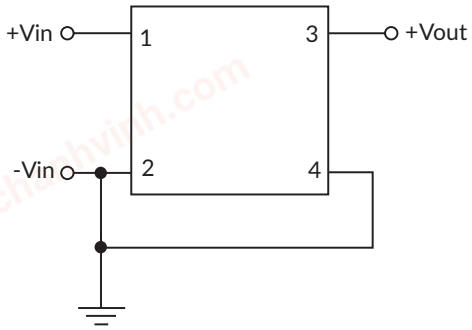

FS02-FS40 Negative Output for Reversible Models

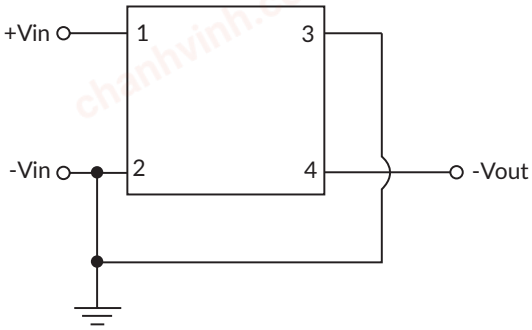

FS02-FS40CT Dual Output

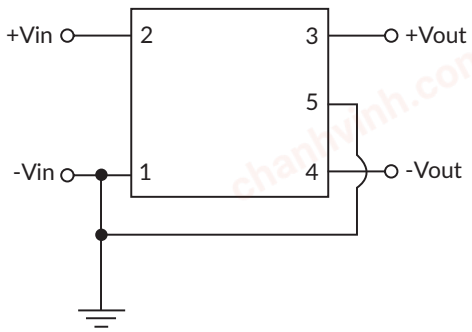

FS50 - FS60 Order as Positive or Negative Output

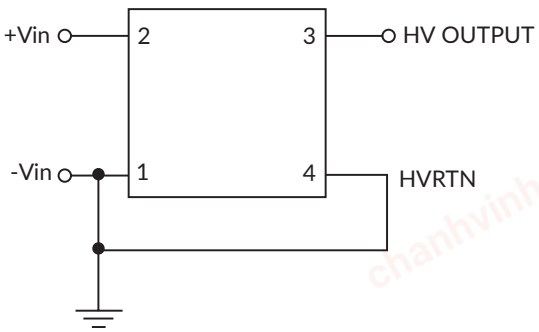

Output Voltage vs. Input Voltage

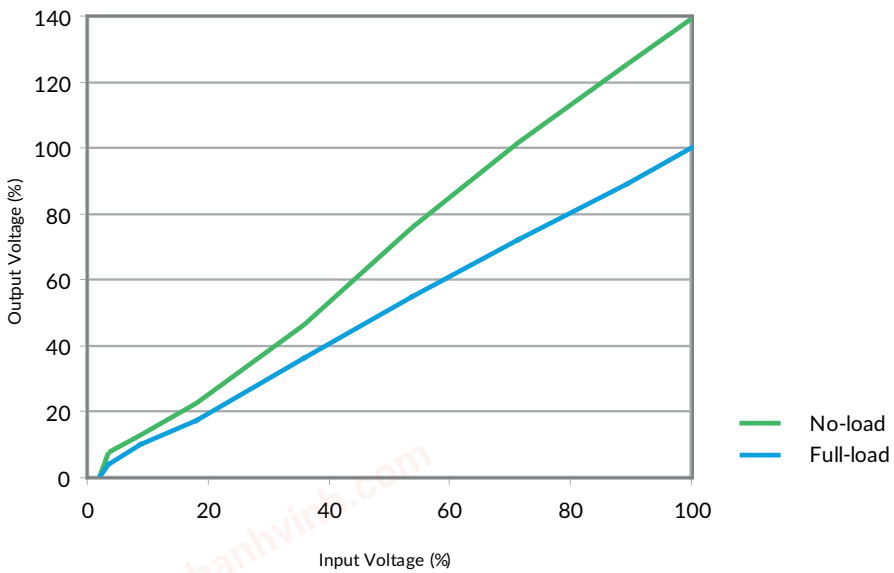

chanhvinh.com

FS series

DC-HVDC converter

Mounting kit

FS-VM Vertical Mount Adapter Board

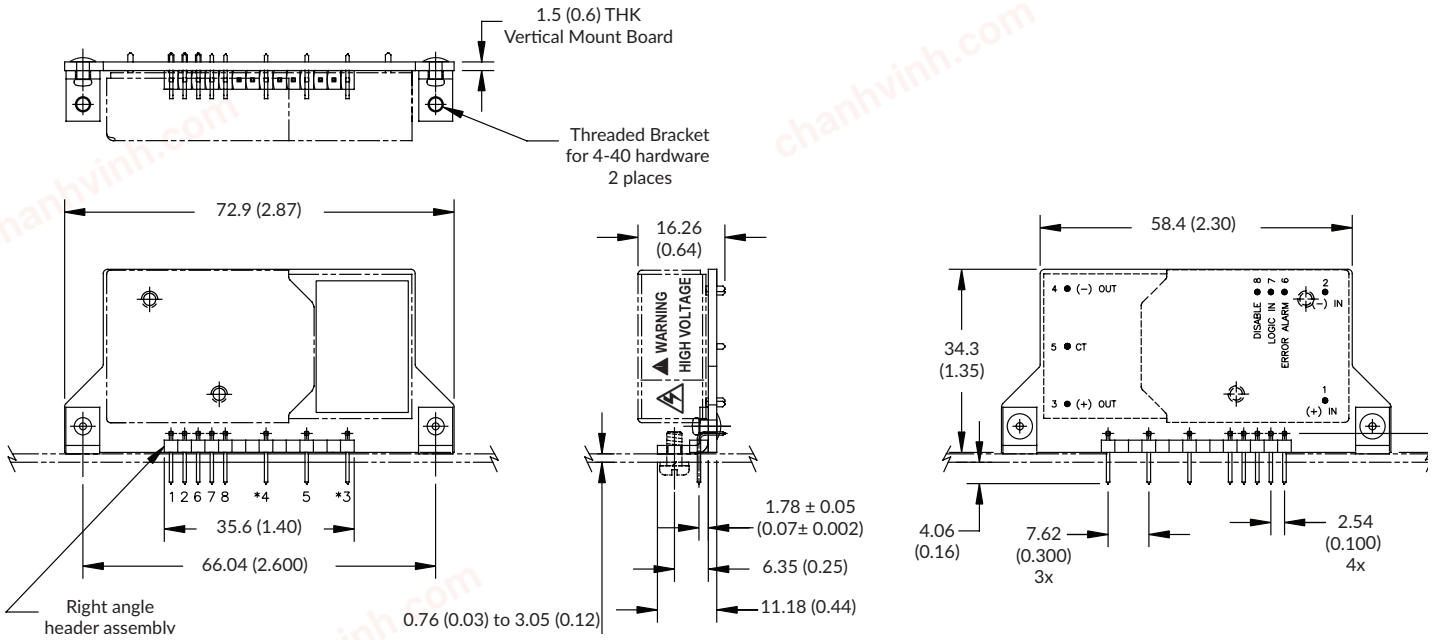

This FS-VM adaptor board provides a convenient way to mount any FS Series high voltage power supply DC to high voltage DC converter on its side, minimizing the X-Y footprint to conserve board real estate. Please note when ordering, the FS Series unit is not included and must be ordered separately.

Weight <28.3g (1oz)
Tolerance: X.XX±0.51 (0.02)
Pin Tolerance: ±0.127 (0.005)

chanhvinh.com

FS series

DC-HVDC converter

Mounting kit

FS-EB evaluation board

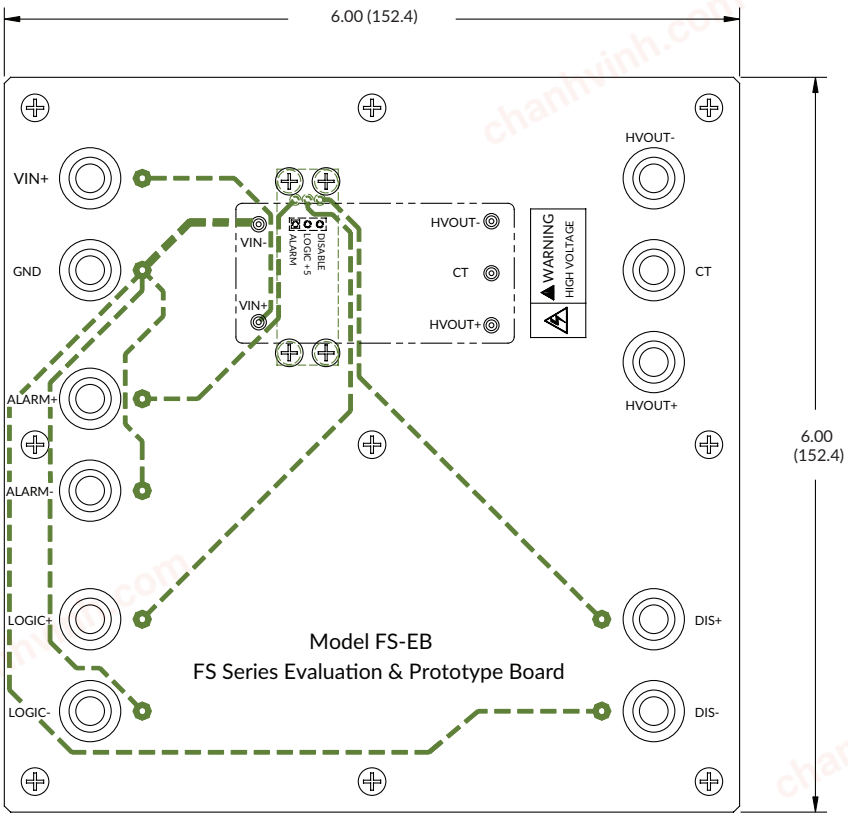

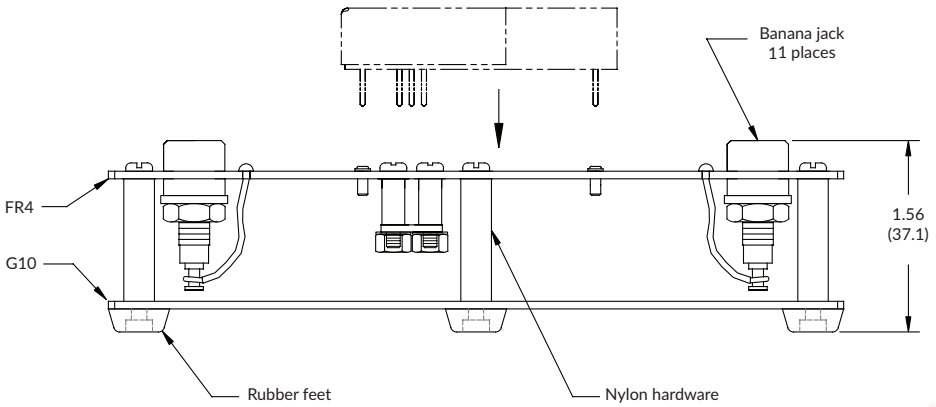

This FS-EB evaluation board provides a convenient package to use any FS Series high voltage power supply without having to it onto a PC board. The board provides for easy prototyping and evaluation. Please note when ordering, the FS Series unit is not included and must be ordered separately.

Weight <200g (7oz)
Tolerance: X.XX±0.51 (0.02)
Pin Tolerance: ± 0.127 (0.005)

chanhvinh.com

FS series

DC-HVDC converter

Mounting kit

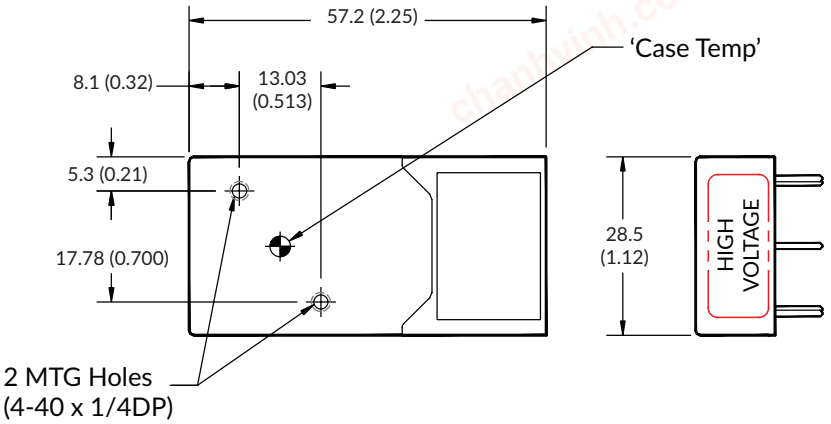

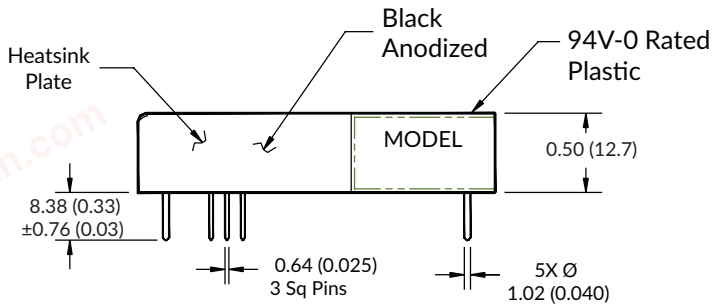

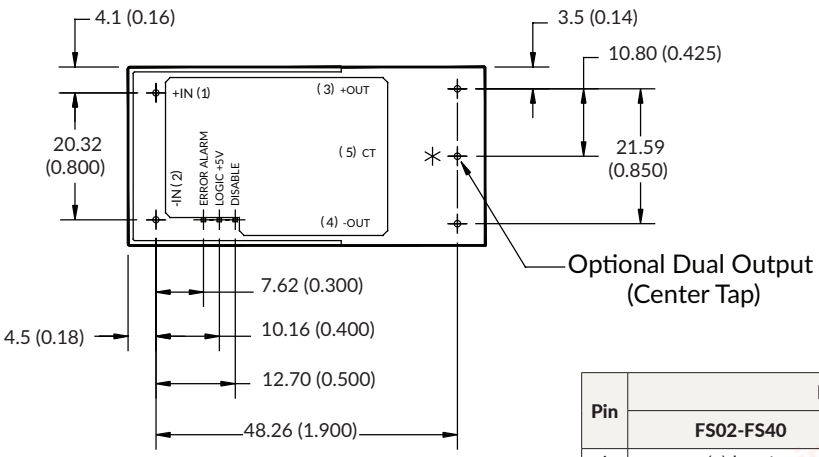

Pin	Function	
	FS02-FS40	FS50 & FS60
1	(+) Input	(+) Input
2	(-) Input	(-) Input
3	(+) Output	HV Output
4	(-) Output	HV Return
5	(Center Tap) Optional	N/A
6	Error Alarm (B Version Not Included)	
7	Logic Input: +5V +/-5% (B Version Not Included)	
8	Disable: TTL High = Off (B Version Not Included)	

Notes:

1. All dimensions are in mm (inches).
2. Weight 45g (1.6oz).
3. Tolerance: X.XX±0.51 (0.02).
4. Pin Tolerance: ±0.127 (0.005).
5. FS02 - FS40 are floating. FS50 and FS60 must be ordered as positive or negative
6. Pins 6, 7, and 8 are not included with B suffix models.