chanhvinh.com

DTE40 series

XP Power

40W

DC-DC power supplies

Available in two wide (4:1) input ranges for nominal 24VDC & 48VDC, the DTE40 series of encapsulated 40W DC-DC converters are chassis mount as standard or can be ordered with a DIN rail mount (suffix -D).

They have screw terminals for ease of connection and an LED provides clear 'power good' indication. Remote On/Off is standard and when inhibited the standby current is just 3mA. Isolation is 2.5kVDC input/output providing excellent separation between supply and load. The modules are fully protected against input undervoltage, short circuit and overload conditions. These features, along with a rugged design and wide operating temperature range make the DTE40 series suitable for a variety of commercial and industrial electronics applications.



Features

- Regulated single output
- 4:1 input range
- Single outputs 5.1 to 48VDC
- Fully encapsulated chassis mount
- DIN rail mount option
- 3.0kVDC isolation
- EN55032 Class A with no external components
- Remote On/Off
- -40°C to +95°C operating temperature
- Full power to +85°C
- 3 year warranty

Applications

Industrial

Instrumentation

Process control

Robotics

Technology

Dimensions

112 x 63.8 x 25.6mm (4.41" x 2.51" x 1.01")

Documentation

For further information click the link or scan the code

→ xppower.com

Models & ratings

Model number[3]	Input voltage	Output voltage	Output current	Input current[1,4]		Maximum capacitive load	Efficiency[2]
				No load	Full load		
DTE4024S5V1	24VDC (9-36VDC)	5.1VDC	8.0A	90mA	1.89A	13,600 µF	90%
DTE4024S12		12.0VDC	3.33A		1.85A	2,400 µF	90%
DTE4024S24		24.0VDC	1.67A		1.86A	600 µF	90%
DTE4024S48		48.0VDC	0.835A		1.88A	150 µF	89%
DTE4048S5V1	48VDC (18-75VDC)	5.1VDC	8.0A	55mA	0.96A	13,600 µF	89%
DTE4048S12		12.0VDC	3.33A		0.92A	2,400 µF	91%
DTE4048S24		24.0VDC	1.67A		0.91A	600 µF	92%
DTE4048S48		48.0VDC	0.835A		0.93A	150 µF	90%

Notes:

1. Input current measured at nominal input voltage.
2. Typical values.
3. For optional version fitted with DIN Clip add suffix '-D' e.g. DTE4024S24-D.
4. Input current is typically 3mA at nominal input voltage when output is remotely turned off.

DTE40 series

AC-DC power supplies

Input

Characteristic	Minimum	Typical	Maximum	Units	Notes & conditions
Input voltage range	9		36	VDC	24VDC nominal
	18		75		
Input current	See models and ratings table				
Input filter	Pi type				
Undervoltage lockout	On at >9VDC, Off <7.5VDC				24VDC models
	On at >18VDC, Off <16.0VDC				48VDC models
Input surge			50	VDC	24VDC models for 1s
			100		48VDC models for 1s
Remote on/off	On: Logic High (3.5-12VDC) or open circuit				
	Off: Logic Low (<1.2VDC) or short pin 1 to pin 2				

Output

Characteristic	Minimum	Typical	Maximum	Units	Notes & conditions
Output voltage	5.1		48	VDC	See models and ratings table
Initial set accuracy		±1	±2	%	At full load
Minimum load	No minimum load required				
Start Up delay		50		ms	
Line regulation		±0.5		%	
Load regulation		±1		%	0-100% load
Transient response			5	% deviation	Recovery to within 1% in <250 µs for a 50% load change at 0.25A/µs rate
Ripple & noise		100		mV pk-pk	5.1VDC model, 20MHz bandwidth
		150			12VDC & 48VDC models, 20MHz bandwidth
		200			48VDC model, 20MHz bandwidth
Short circuit protection	Trip & restart (hiccup mode), auto recovery				
Overload protection		150		%	Trip & restart (hiccup mode)
Overvoltage protection		120		%	Zener diode clamp
Temperature coefficient			0.02	%/°C	

chanhvinh.com

DTE40 series

AC-DC power supplies

General

Characteristic	Minimum	Typical	Maximum	Units	Notes & conditions
Efficiency		90		%	See models and ratings table
Isolation	2500			VDC	For 60s functional
Isolation resistance	1000			MΩ	At 500VDC
Input to output capacitance			2400	pF	
Switching frequency		285		kHz	
Power density			0.20 (3.4)	W/cm³ (W/in³)	
Mean time between failure	6000			khrs	MIL-HDBK-217F, +25°C GB
Weight		162 (0.357)		g (lbs)	

Environmental

Characteristic	Minimum	Typical	Maximum	Units	Notes & conditions
Operating temperature	-40		+95	°C	See derating curve
Storage temperature	-50		+125	°C	
Case temperature			95	°C	
Thermal impendance	4.75			°C/W	Natural convection
	3.55				100LFM
	3.10				200LFM
	1.95				400LFM
Humidity	5		95	%RH	Non-condensing
Coolling	Natural convection				
Shock	±3 shocks in each plane, total 18 shocks of 30g : 11ms halfsine. Conforms to EN60068-2-27 & EN60068-2-47				
Vibration	10-500Hz at 2 g sweep and endurance at resonance in all 3 planes. Conforms to EN60068-2-6				

Emissions - EMC

Phenomenon	Standard	Test level	Notes & conditions
Conducted	EN55032	Level A	With no external components
Radiated	EN55032	Level A	See application notes

Emissions - Immunity

Phenomenon	Standard	Test level	Criteria	Notes & conditions
Immunity	EN55035			
ESD immunity	EN61000-4-2	±4kV Contact, ±8 kV Air	A	
Radiated immunity	EN61000-4-3	10V/m	A	
EFT/burst	EN61000-4-4	3	A	
Surge	EN61000-4-5	3	A	
Conducted	EN61000-4-6	10Vm	A	
Magnetic fields	EN61000-4-8	30A/m	A	

chanhvinh.com

DTE40 series

AC-DC power supplies

Safety approvals

Certification	Standard	Notes & conditions
UL	UL/cUL60950-1, UL/cUL62368-1	ITE
CB	IEC60950-1, IEC62368-1	ITE
CE	Meets all applicable directives	
UKCA	Meets all applicable legislation	

Application notes

Derating curve for convection cooling

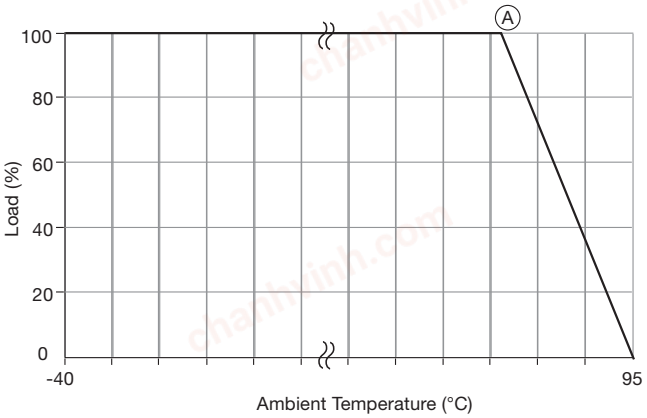

Ⓐ : 78 °C for DTE4048S24
: 76 °C for DTE4048S12
: 73 °C for DTE4024S5V1, S12, S24
DTE4048S48
: 71 °C for DTE4024S48
DTE4048S5V1

Radiated emissions

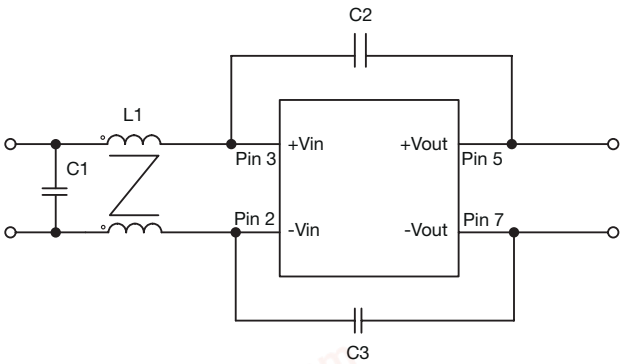

Model	L1	C1	C2	C3
DTE4024SXX	175 µH	4.7µF/50V	220pF/3kV	220pF/3kV
DTE4048SXX	175 µH	3.3µF/100V	220pF/3kV	220pF/3kV

Mechanical details

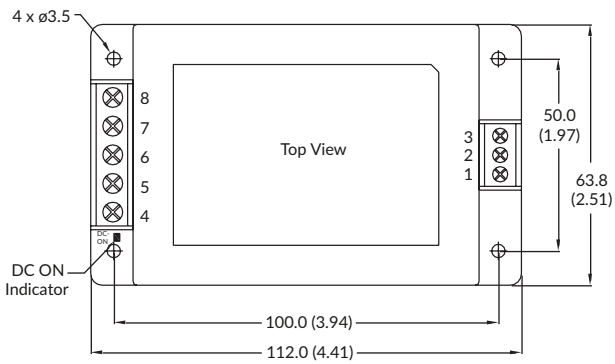

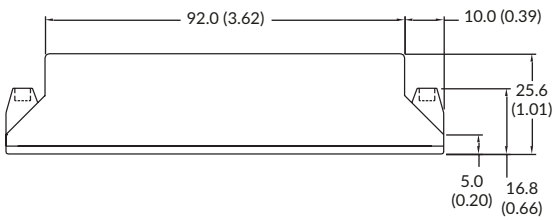

-D version

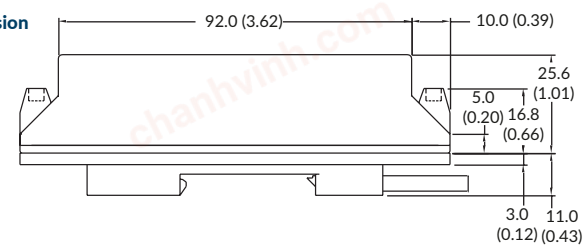

Notes:

1. All dimensions are in inches (mm)
2. Weight: 162g (0.357lbs) approx
3. Weight for -D version: 216g (0.476lbs) approx
4. Terminal wire size 1.5mm² max
5. Screw terminal torque 0.5 to 0.7Nm (4.5 to 6.2 lb-in)
6. Case tolerance: ±0.5 (±0.02)

Pin	Function
1	Remote On/Off
2	-Vin
3	+Vin
4	+Vout
5	No Connection
6	-Vout
7	No Connection
8	No Connection