chanhvinh.com

CHD250 Series

AC-DC Power Supplies

XP Power

250 Watts

- 250 W Convection-cooled
- Industry Standard 3"x 5"Package
- 80 VAC to 300 VAC Input
- 5V Standby (optional)
- <0.5W Standby Power
- IT & Medical (BF) Safety Approvals
- Power Fail & Inhibit Signals
- 3 Year Warranty

GREEN XP POWER

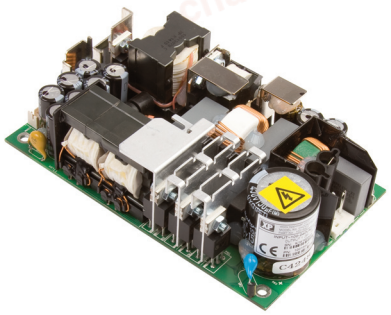

The universal AC input CHD250 provides 250W of convection cooled output power in a 3" x 5" industry standard package, over the temperature range -20°C to +50°C with derating to +70°C. Approved for IT and Medical and with a feature set including a 5V standby output, <0.5W input power when in standby mode, power fail and inhibit signals the CHD250 is ideal for a wide range of applications where fan cooling is not desirable.

Dimensions:

CHD250:
5.00 x 3.00 x 1.43" (115 x 76 x 36 mm)
CHD250-C:
5.50 x 3.48 x 1.75" (139.7 x 88.5 x 44.4 mm)

Models & Ratings

Output Voltage 1	Output Current V1	Standby Supply V2 (optional)	Output Power	Model Number [1,2]
12 V	20.8 A	5.0 V / 0.5 A	250 W	CHD250PS12
15 V	16.7 A	5.0 V / 0.5 A	250 W	CHD250PS15
24 V	10.4 A	5.0 V / 0.5 A	250 W	CHD250PS24
28 V	8.9 A	5.0 V / 0.5 A	250 W	CHD250PS28
48 V	5.2 A	5.0 V / 0.5 A	250 W	CHD250PS48

Notes

1. Add suffix '-C' for cover version e.g. CHD250PS24-C (derating will be applicable, see derating curve fig. 8).
2. Add suffix -A for 5 V standby option or -AC for standby and cover options combined, (derating will be applicable, see derating curve fig. 8).
3. Cover kits available. Order part no.: CCB200-CHD250 CVR

Mechanical Details

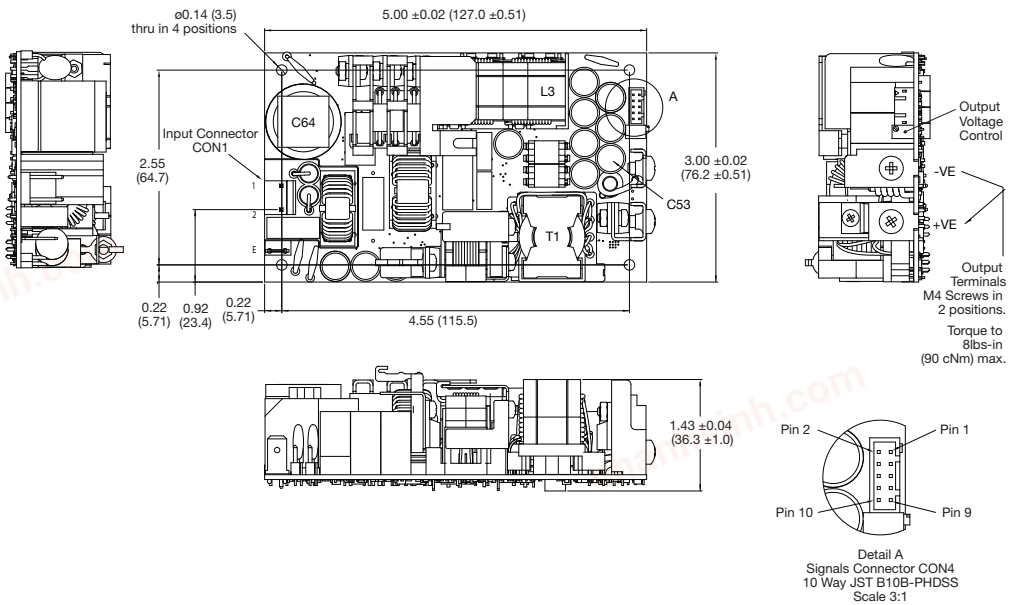

chanhvinh.com

Input

Characteristic	Minimum	Typical	Maximum	Units	Notes & Conditions
Input Voltage - Operating	80	115/230	264	VAC	Derate output power < 90 VAC. See fig. 1
Input Voltage - Fault Condition			300	VAC	5 seconds max
Input Frequency	47	50/60	63	Hz	Agency approval, 47-63 Hz
Power Factor		>0.93			EN61000-3-2 class A compliant
Input Current - Full Load		2.4/1.3		A	115/230 VAC
No Load Input Power			0.5	W	All models, when inhibit activated
		3.2		W	CHD250PS12 - 115V AC
		3.1		W	CHD250PS12 - 230V AC
		3.8		W	CHD250PS24 - 115V AC
		3.1		W	CHD250PS24 - 230V AC
		3.5		W	CHD250PS48 - 115V AC
		2.8		W	CHD250PS48 - 230V AC
Inrush Current		20	40	A	264 VAC cold start
Earth Leakage Current		85/170	250	µA	Typ. 115/230 VAC 50 Hz, Max 264 VAC 60 Hz
Input Protection	5 A/250 V internal fuse in both AC lines				

Input Voltage Derating

Figure 1

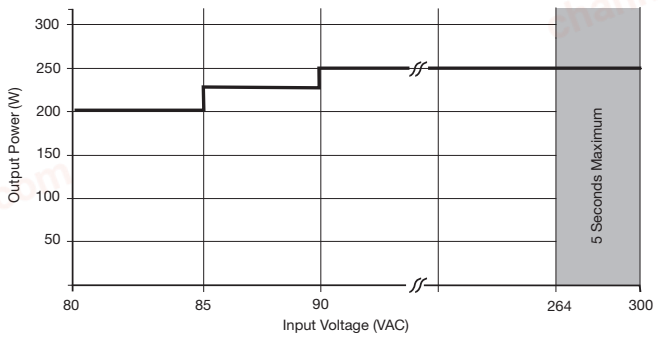

Output

Characteristic	Minimum	Typical	Maximum	Units	Notes & Conditions
Output Voltage	12		48	VDC	See Models and Ratings table
Initial Set Accuracy			±1	%	50% load, 115/230 VAC
Output Voltage Adjustment			+5/-4	%	
Minimum Load	0			A	
Start Up Delay		1.3	2.0	s	115/230 VAC full load from input AC turn on
Hold Up Time		15		ms	90 VAC, full load
Drift			±0.2	%	After 20 min warm up
Line Regulation			±0.5	%	90-264 VAC at 50% load
Load Regulation			±0.5	%	On V1, from 0-100% load
Transient Response			<4	%	Recovery within 1% in less than 500 µs for a 50-75%-50% load change
Ripple & Noise			1	% pk-pk	20 MHz bandwidth
Overvoltage Protection	115		140	%	Vnom DC. Output 1, recycle input to reset
Overload Protection	110		150	%	Trip & Restart characteristic V1
Short Circuit Protection					Shutdown and auto recovery
Temperature Coefficient			0.05	%/°C	
Overtemperature Protection					Not fitted
Patient Leakage Current		83	100	µA	264 VAC/60 Hz

chanhvinh.com

General

Characteristic	Minimum	Typical	Maximum	Units	Notes & Conditions
Efficiency		93-94		%	230 VAC full load
Isolation: Input to Output	4000			VAC	2 x MOPP
Input to Ground	1500			VAC	1 X MOPP
Output to Ground	1500			VAC	1 X MOPP
Switching Frequency		45-280		kHz	PFC
		31		kHz	Boost
		63		kHz	Main converter
		56-91		kHz	Standby (optional)
Power Density			11.7	W/in³	
Mean Time Between Failure		213		kHrs	MIL-HDBK-217F, Notice 2 +25 °C GB
Weight		0.94 (425)		lb (g)	CHD250PSxx
		0.97 (441)			CHD250PSxx-A
		1.36 (619)			CHD250PSxx-C
		1.40 (636)			CHD250PSxx-AC

Efficiency Vs Load

Figure 2
12 V Models

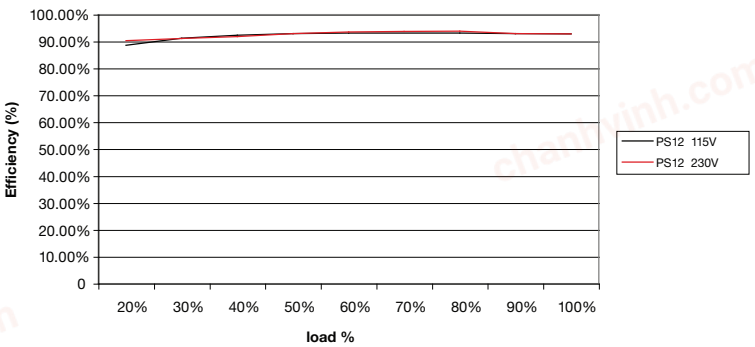

Figure 3
24 V Models

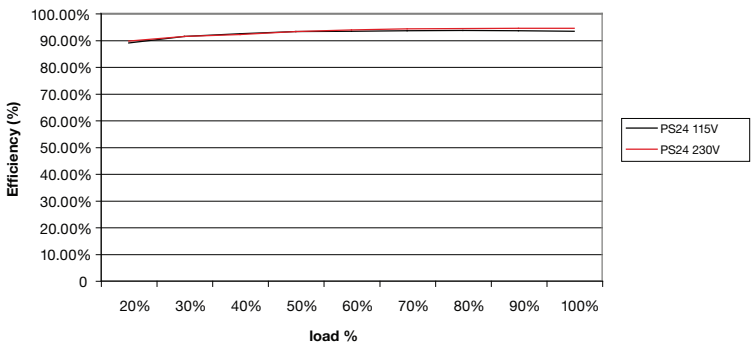

Figure 4
48 V Models

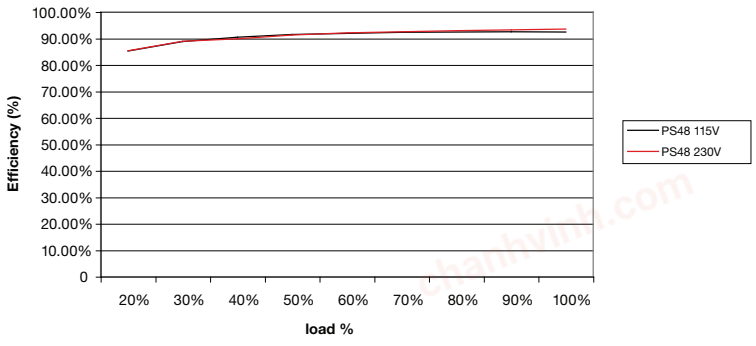

chanhvinh.com

Signals & Controls

Characteristic	Notes & Conditions
Power Fail (AC-OK)	Uncommitted isolated optocoupler transistor, normally off when AC is good (see fig.5) Provides 5 ms warning of loss of output from AC failure off when AC is healthy.
Inhibit	Uncommitted isolated optocoupler diode, powered diode inhibits the supply (see fig.6 & 7)
Standby Supply (optional)	5V/0.5A Isolated supply present when AC applied.
Remote Sense	Compensates for 0.25V per lead, 0.5V total drop.

Power Fail

Figure 5

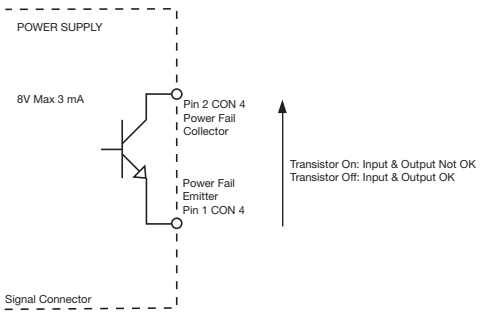

Inhibit (High)

Figure 6

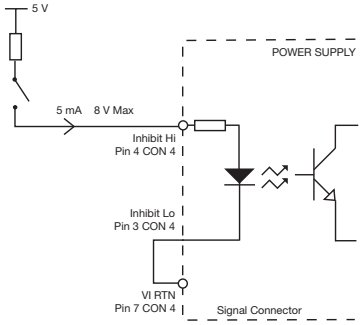

Inhibit (Low)

Figure 7

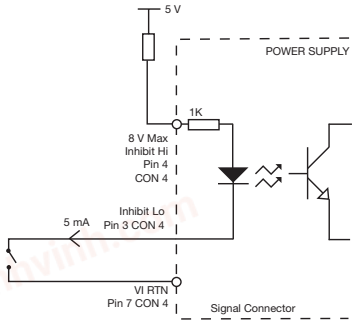

Environmental

Characteristic	Minimum	Typical	Maximum	Units	Notes & Conditions
Operating Temperature	-20		+70	°C	See derating curve, fig.8. and Thermal Considerations on page 8.
Storage Temperature	-40		+85	°C	
Cooling					Convection cooled
Humidity			95	%RH	Non-condensing
Operating Altitude			5000	m	Information Technology
			4000		Medical
Shock	±3 x 30g shocks in each plane, total 18 shocks. 30g = 11ms (±0.5msec), half sine. Conforms to EN60068-2-27 & EN60068-2-47				
Vibration	Single axis 10 - 500 Hz at 2g sweep and endurance at resonance in all 3 planes. Conforms to EN60068-2-6				

Temperature Derating Curve

Figure 8

Standard & Covered (-C) versions

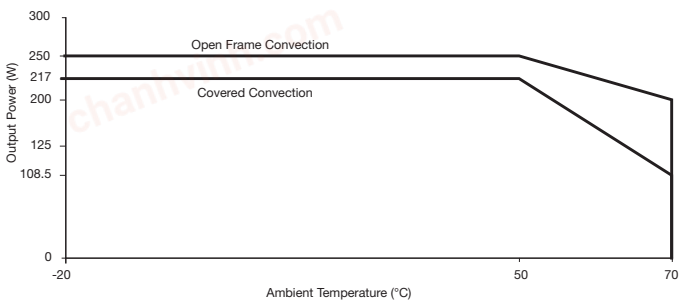

5 V Standby (-A & -AC) versions

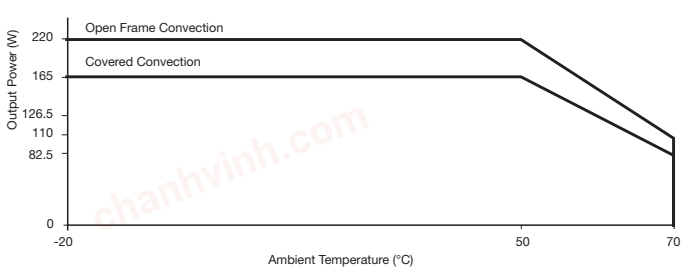

chanhvinh.com

EMC: Emissions

Phenomenon	Standard	Test Level	Notes & Conditions
Conducted	EN55032/11	Class B	
Radiated	EN55032/11	Class A	
		Class B	With 2 turn Wurth 742-700-56 core or similar on AC cable
Harmonic Current	EN61000-3-2	Class A	All models

EMC: Immunity

Phenomenon	Standard	Test Level	Criteria	Notes & Conditions
Low Voltage PSU EMC	EN61204-3	High severity level	as below	
Radiated	EN61000-4-3	3	A	
EFT	EN61000-4-4	3	A	
Surges	EN61000-4-5	Installation class 3	A	
Conducted	EN61000-4-6	3	A	
Dips and Interruptions	EN55035 (100 VAC)	Int >95% (0 VAC), 8.3ms	A	
		Dip 30% (70 VAC), 416ms	B	
		Int >95% (0 VAC), 4160ms	B	
	EN55035 (240 VAC)	Int >95% (0 VAC), 10.0ms	A	
		Dip 30% (168 VAC), 500ms	B	
		Int >95% (0 VAC), 5000ms	B	
	EN60601-1-2 (100 VAC)	Int >95% (0 VAC), 10.0ms	A	
		Dip 60% (40 VAC), 100ms	A	Derate output power to 120 W
		Dip 30% (70 VAC), 500ms	A	
		Int >95% (0 VAC), 5000ms	B	
	EN60601-1-2 (240 VAC)	Int >95% (0 VAC), 10.0ms	A	
		Dip 60% (96 VAC), 100ms	A	
		Dip 30% (168 VAC), 500ms	A	
		Int >95% (0 VAC), 5000ms	B	

Safety Approvals

Safety Certification	Safety Standard	Notes & Conditions
CB Report	IEC60950-1:2005, IEC62368-1:2014	Information Technology
	IEC60601-1 Ed 3 Including Risk Management	Medical
UL	UL60950-1 (2014), CSA 22.2 No.60950-1-1:08, UL62368-1:2014, CSA C22.2 No62368-1-14	Information Technology
	ANSI/AAMI ES60601-1:2005 & CSA C22.2, No.60601-1:08	Medical
EN	EN60950-1, EN62368-1:2014+A11:2017	Information Technology
	EN60601-1	Medical
Equipment Protection Class	Class I & BF	See safety agency conditions of acceptibility for details
CE	Meets all applicable directives	
UKCA	Meets all applicable legislation	

	Means of Protection	Category
Primary to Secondary	2 x MOPP (Means of Patient Protection)	IEC60601-1 Ed 3
Primary to Earth	1 x MOPP (Means of Patient Protection)	
Secondary to Earth	1 x MOPP (Means of Patient Protection)	

chanhvinh.com

Mechanical Details

CHD250

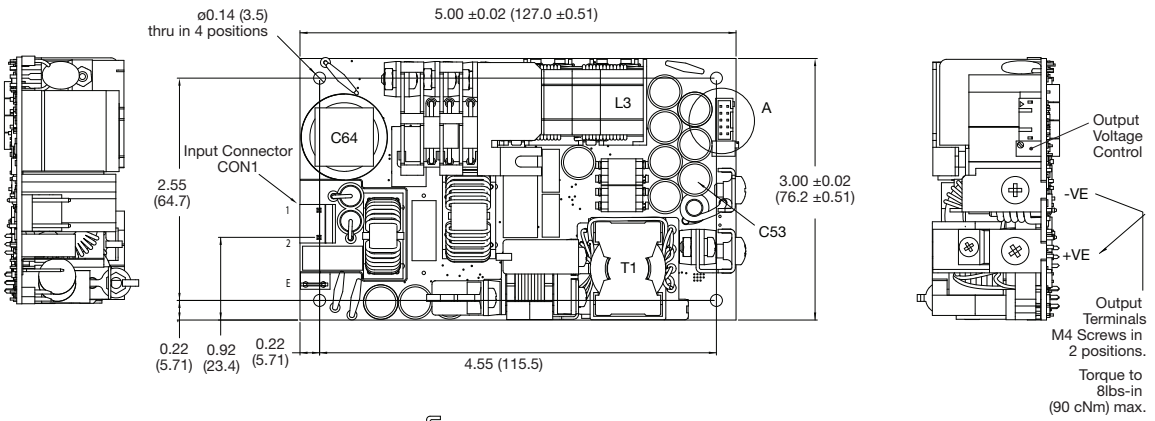

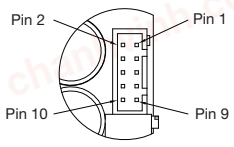

Detail A
Signals Connector CON4
10 Way JST B10B-PHDSS
Scale 3:1

CHD250 Standby Option (–A)

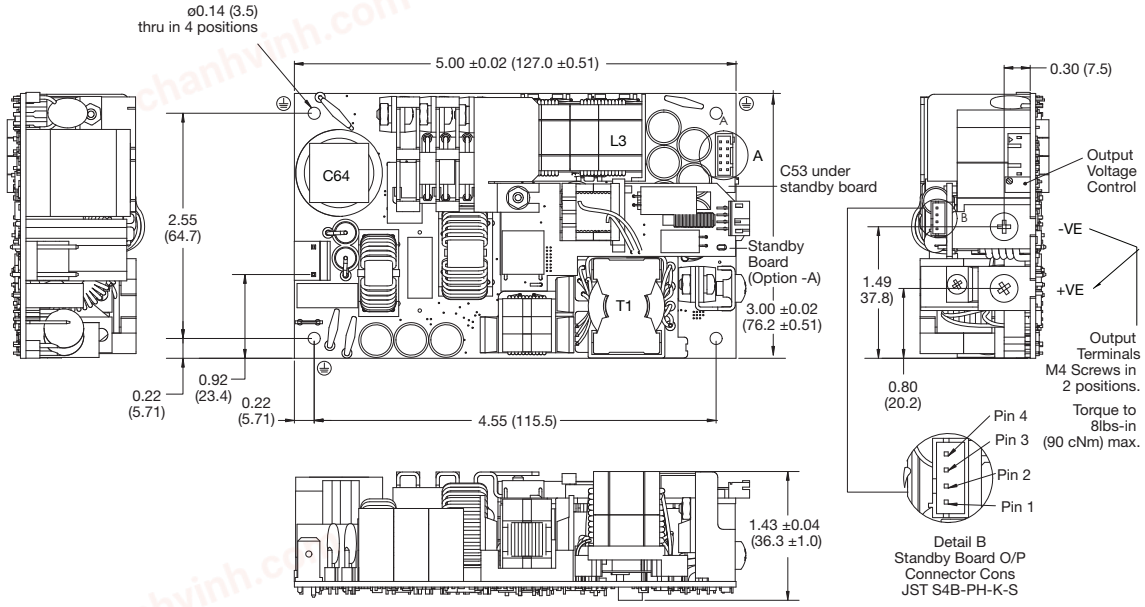

Detail B
Standby Board O/P
Connector Cons
JST S4B-PH-K-S

Input Connector CON 1	
1	Line
2	Neutral

Mates with Molex housing 09-50-1031 and Molex series 5194 crimp terminals.

Output Connector CON 3	
1	+VE
2	-VE

Signals Connector CON 4	
1	Power Fail (Emitter)
2	Power Fail (Collector)
3	Inhibit (Cathode)
4	Inhibit (Anode)
5	N/C
6	N/C
7	- VE Sense
8	- VE Sense
9	+VE Sense
10	+VE Sense

Mates with JST PHDR-10VS housing and JST SPHD-001T-P0.5 crimp terminals

Standby Output (Option -A)	
1	+5 V
2	+5 V
3	0 V
4	0 V

Mates with JST PHR-4 housing and JST SPH-002T-P0.5L crimp terminals

Notes

1. Dimensions shown in inches (mm).

chanhvinh.com

Mechanical Details

CHD250 Covered (-C)

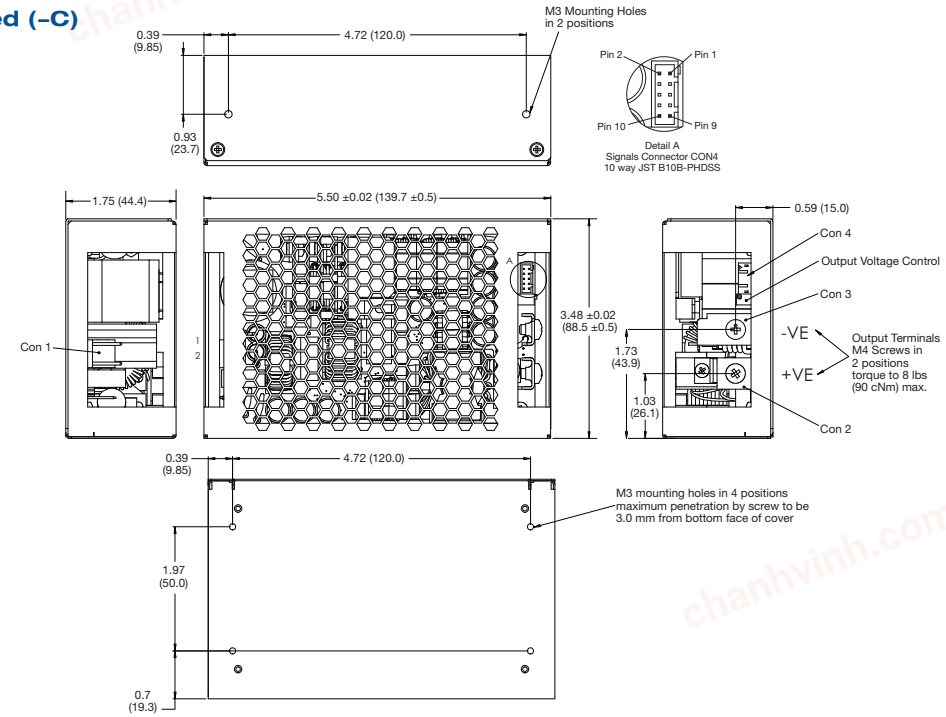

CHD250 Covered Standby Option (-AC)

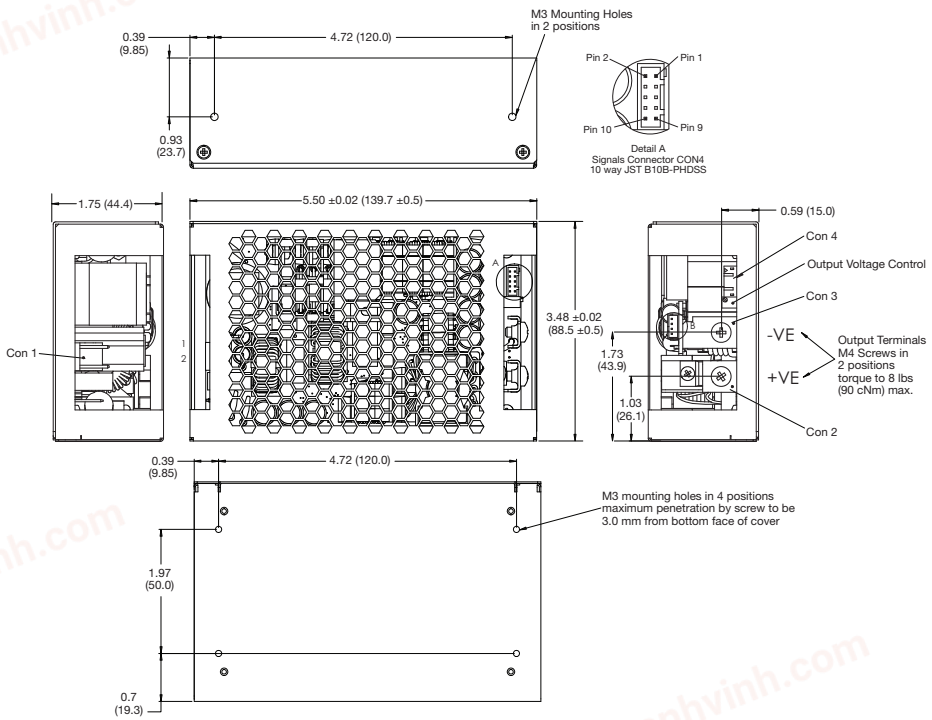

Input Connector CON 1	
1	Line
2	Neutral

Mates with Molex housing 09-50-1031 and Molex series 5194 crimp terminals.

Output Connector CON 3	
1	+VE
2	-VE

Signals Connector CON 4	
1	Power Fail (Emitter)
2	Power Fail (Collector)
3	Inhibit (Cathode)
4	Inhibit (Anode)
5	N/C
6	N/C
7	- VE Sense
8	- VE Sense
9	+VE Sense
10	+VE Sense

Mates with JST PHDR-10VS housing and JST SPHD-001T-P0.5 crimp terminals

Standby Output (Option -A)	
1	+5 V
2	+5 V
3	0 V
4	0 V

Mates with JST PHR-4 housing and JST SPH-002T-P0.5L crimp terminals

Notes

1. Dimensions shown in inches (mm).

chanhvinh.com

Thermal Considerations

In order to ensure safe operation of the PSU in the end-use equipment, the temperature of the components listed in the table below must not be exceeded. Temperature should be monitored using thermocouples placed on the hottest part of the component (out of direct air flow). See below for component locations.

Temperature Measurements (At Ambient 50 °C)	
Component	Max Temperature °C
T1 Coil	120 °C
L3 Coil	120 °C
C64	105 °C
C53	105 °C

Service Life

The estimated service life of the CHD250 Series is determined by the cooling arrangements and load conditions experienced in the end application. Due to the uncertain nature of the end application this estimated service life is based on the actual measured temperature of a key capacitors with in the product when installed by the end application. The worst case of the two figures should be taken as the indicative service life in 24/7 operation.

The graph below expresses the estimated lifetime of a given component temperature and assumes continuous operation at this temperature.

Estimated Service Life vs Component Temperature

