chanhvinh.com

CCL400 Series

AC-DC Power Supplies

XP Power

400 Watts

- 400 W Convection-cooled
- Conduction Cooling For Higher Ambient Operation
- 94% Efficiency
- 85 VAC to 264 VAC Input
- 5V Standby
- <1W Standby Power
- IT & Medical Safety Approvals
- Power Fail & Inhibit Signals
- 3 Year Warranty



GREEN XP POWER

The universal AC input CCL400 provides 400W of convection cooled output power over the temperature range -40°C to +50°C with derating to +70°C. The temperature range can be extended by the use of conduction cooling to the full 400W at +70°C. Approved for IT and Medical and with a feature set including a 5V standby output, <0.5W standby power, power fail and inhibit signals the CCL400 is ideal for a wide range of applications where fan cooling is not desirable.

Dimensions:

CCL400:
7.00 x 3.95 x 1.57" (178 x 100 x 40 mm)
CCL400-C:
7.39 x 4.04 x 1.92" (189.9 x 107.3 x 48.9 mm)

Models & Ratings

Output Voltage 1	Output Current V1	Standby Supply V2	Output Power	Model Number [1,2]
12 V	33.3 A	5.0 V / 0.5 A	400 W	CCL400PS12
24 V	16.6 A	5.0 V / 0.5 A	400 W	CCL400PS24
30 V	13.3 A	5.0 V / 0.5 A	400 W	CCL400PS30
48 V	8.3 A	5.0 V / 0.5 A	400 W	CCL400PS48

Notes

1. Add suffix '-C' for cover version e.g. CCL400PS24-C
2. Add suffix '-SC' for a right angled input screw terminal connector on a covered version e.g. CCL400PS24-SC.

Mechanical Details

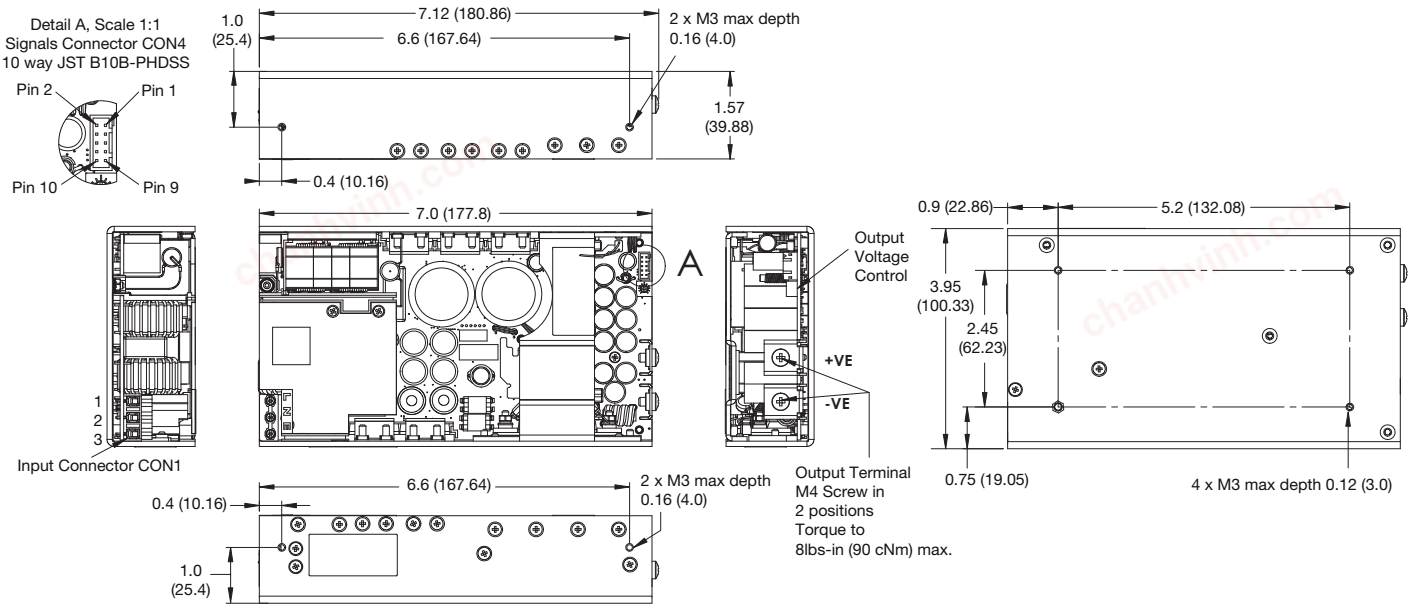

chanhvinh.com

Input

Characteristic	Minimum	Typical	Maximum	Units	Notes & Conditions
Input Voltage - Operating	85	115/230	264	VAC	Derate output power < 100 VAC for convection cooling or <90 VAC for conduction cooling. See fig. 1
Input Voltage - Fault Condition			300	VAC	5 seconds max
Input Frequency	47	50/60	63	Hz	Agency approval, 47-63 Hz
Power Factor		>0.95			EN61000-3-2 class A compliant
					EN61000-3-2 class C for loads ≥10%
Input Current - Full Load		3.8/1.9		A	115/230 VAC
No Load Input Power			1	W	All models, when inhibit activated
Inrush Current		35	60	A	230 VAC
Earth Leakage Current		90/180	250	µA	Typ. 115/230 VAC 50 Hz, Max 264 VAC 60 Hz
Input Protection	F10.0 A 250 V internal fuse in both AC lines				

Input Voltage Derating

Figure 1

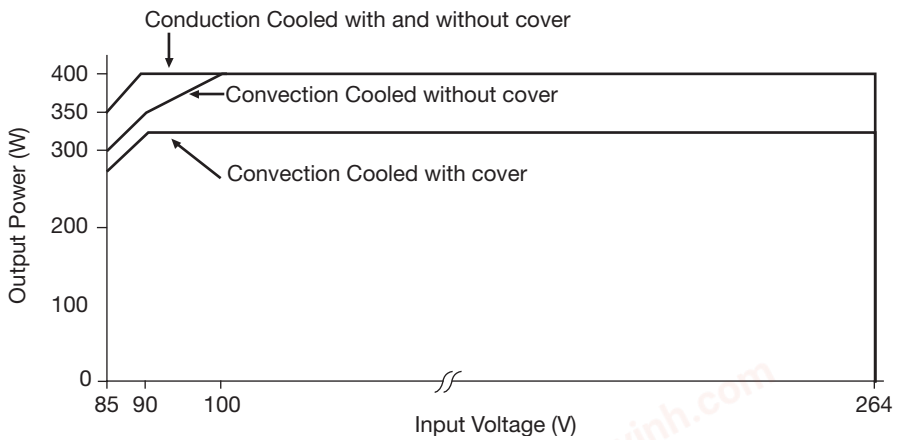

Output

Characteristic	Minimum	Typical	Maximum	Units	Notes & Conditions
Output Voltage	12		48	VDC	See Models and Ratings table
Initial Set Accuracy			±0.5	%	50% load, 115/230 VAC
Output Voltage Adjustment			±3	%	
Minimum Load	0			A	
Start Up Delay		1.5	2.0	s	115/230 VAC full load from input AC turn on
Hold Up Time		30		ms	
Drift			±0.2	%	After 20 min warm up
Line Regulation			0.5	%	
Load Regulation			0.5	%	
Transient Response			<4	%	Recovery within 1% in less than 500 µs for a 50-75%-50% load change
Ripple & Noise			1	% pk-pk	20 MHz bandwidth
Overvoltage Protection	115		140	%	Vnom DC. Output 1, recycle input to reset
Overload Protection	110		150	%	Trip & Restart characteristic V1
Short Circuit Protection					Shutdown and auto recovery
Temperature Coefficient			0.05	%/°C	
Overtemperature Protection					Shutdown and auto recovery

chanhvinh.com

General

Characteristic	Minimum	Typical	Maximum	Units	Notes & Conditions
Efficiency		93-94		%	230 VAC full load
Isolation: Input to Output	4000			VAC	2 x MOPP
Input to Ground	1500			VAC	1 X MOPP
Output to Ground	500			VDC	
Switching Frequency	60		300	kHz	PFC
		75		kHz	Main converter
		70		kHz	Standby
Power Density			9.1	W/in³	
Mean Time Between Failure		172		kHrs	MIL-HDBK-217F, Notice 2 +25 °C GB
Weight		2.12 (960)		lb (g)	CCL400PSxx
		2.46 (1115)			CCL400PSxx-C

Efficiency Vs Load

Figure 2
12 V Models

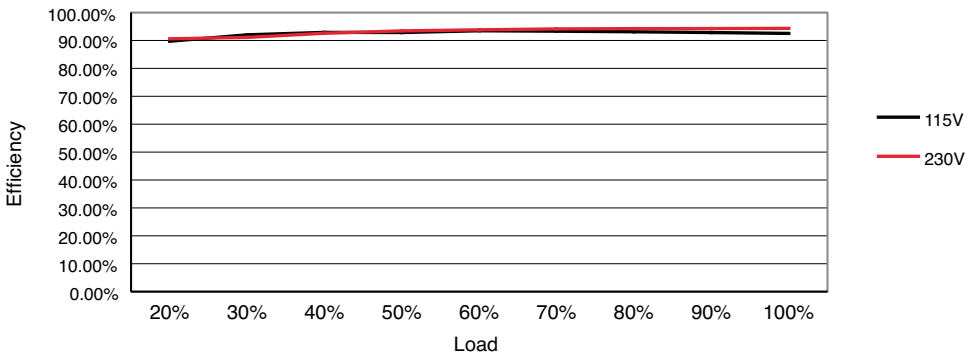

Figure 3
24 V Models

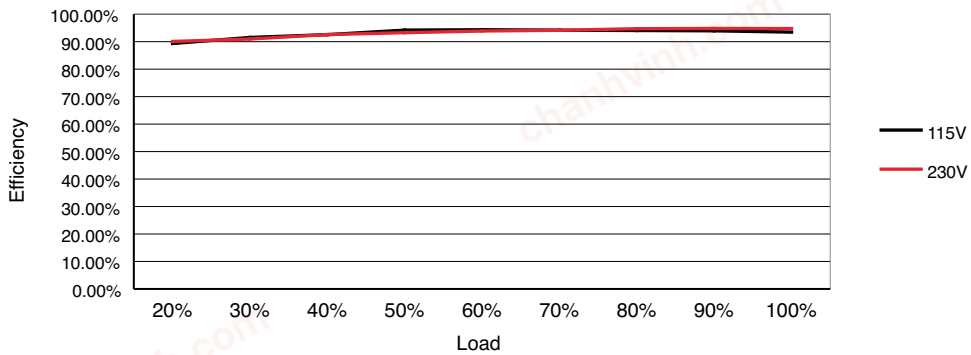

Figure 4
48 V Models

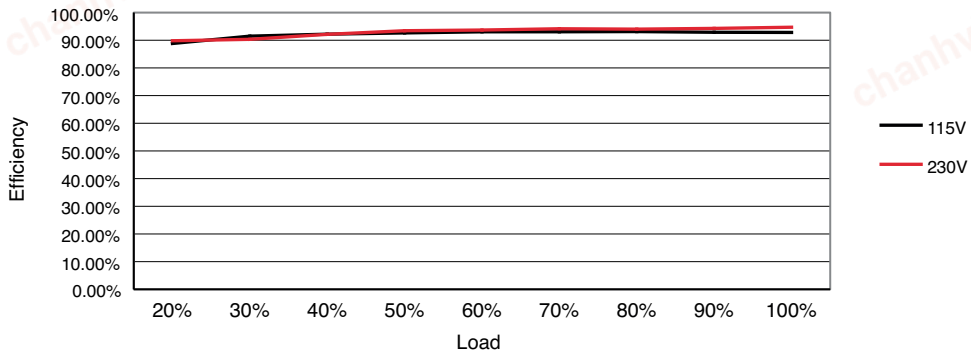

chanhvinh.com

Signals & Controls

Characteristic	Notes & Conditions
Power Fail (AC-OK)	Uncomitted opto isolated transistor, normally off when AC is good (see fig.5) Provides 5 - 15ms warning of loss of output from AC failure off when AC is healthy.
Inhibit	Uncommited isolated optocoupler diode, powered diode inhibits the supply (see fig.6 & 7)
Standby Supply	5V/0.5A Isolated supply present when AC applied.
Remote Sense	Compensates for 0.25V per lead, 0.5V total drop.

Power Fail

Figure 5

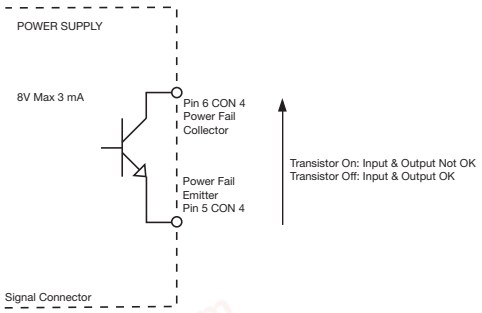

Inhibit (High)

Figure 6

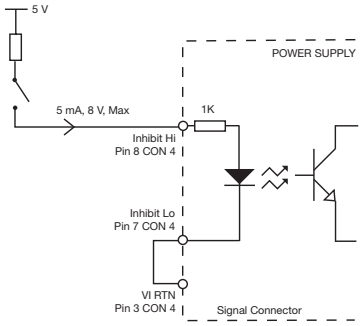

Inhibit (Low)

Figure 7

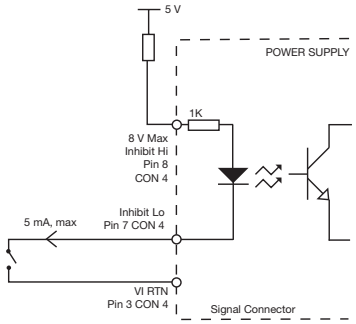

Environmental

Characteristic	Minimum	Typical	Maximum	Units	Notes & Conditions
Operating Temperature	-40		+70	°C	See derating curve, fig.8. and Thermal Considerations on page 8.
Storage Temperature	-40		+85	°C	
Cooling					Convection or conduction-cooled with 0.5 °C/W or better heatsink
Humidity			95	%RH	Non-condensing
Operating Altitude			5000	m	
Shock	±3 x 30g shocks in each plane, total 18 shocks. 30g = 11ms (±0.5msec), half sine. Conforms to EN60068-2-27 & EN60068-2-47				
Vibration	Single axis 10 - 500 Hz at 2g sweep and endurance at resonance in all 3 planes. Conforms to EN60068-2-6				

Temperature Derating Curve

Figure 8 - No Cover Fitted

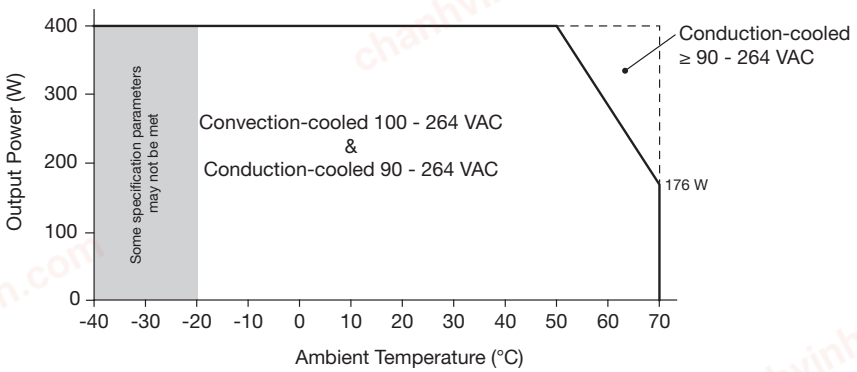

Figure 9 - Cover Fitted

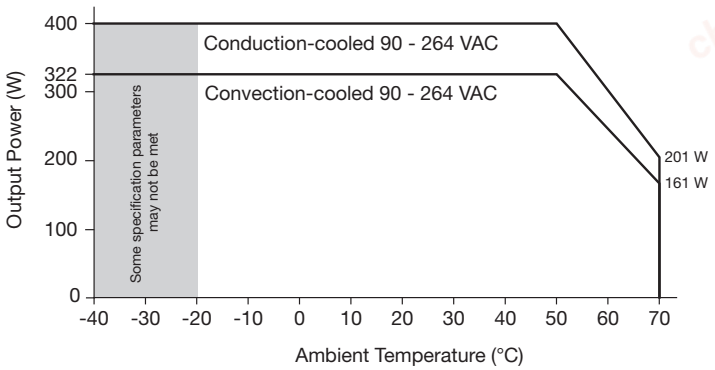

chanhvinh.com

EMC: Emissions

Phenomenon	Standard	Test Level	Notes & Conditions
Conducted	EN55032/11	Class B	
Radiated	EN55032/11	Class A	
		Class B	With 1 turn Wurth 742-700-81 core or similar on all 3 conductors of input lead and 2 turns Kitagawa R1-18-28-10 core or similar on both conductors of output lead.
Harmonic Current	EN61000-3-2	Class A	

EMC: Immunity

Phenomenon	Standard	Test Level	Criteria	Notes & Conditions
Low Voltage PSU EMC	EN61204-3	High severity level	as below	
Harmonic Current	EN61000-3-2	Class A		All models
		Class C		>40 W
Radiated	EN61000-4-3	3	A	
EFT	EN61000-4-4	3	A	
Surges	EN61000-4-5	Installation class 3	A	
Conducted	EN61000-4-6	3	A	
Dips and Interruptions	EN55035 (100 VAC)	Dip >95% (0 VAC), 8.3ms	A	
		Dip 30% (70 VAC), 416ms	B	
		Dip >95% (0 VAC), 4160ms	B	
	EN55035 (240 VAC)	Dip >95% (0 VAC), 10.0ms	A	
		Dip 30% (168 VAC), 500ms	A	
		Dip >95% (0 VAC), 5000ms	B	
	EN60601-1-2 (100 VAC)	Dip >95% (0 VAC), 10.0ms	A	
		Dip 60% (40 VAC), 100ms	A	Derate output power to 200 W
		Dip 30% (70 VAC), 500ms	A	Derate output power to 200 W
		Dip >95% (0 VAC), 5000ms	B	
	EN60601-1-2 (240 VAC)	Dip >95% (0 VAC), 10.0ms	A	
		Dip 60% (96 VAC), 100ms	A	
		Dip 30% (168 VAC), 500ms	A	
		Dip >95% (0 VAC), 5000ms	B	
	SEMI F47			Compliant

Safety Approvals

Safety Certification	Safety Standard	Notes & Conditions
CB Report	IEC60950-1:2005, IEC62368-1:2014	Information Technology
	IEC60601-1 Ed 3.1 Including Risk Management	Medical
UL	UL60950-1 (2014), CSA 22.2 No.60950-1-1:08, UL62368-1 (2014), CSA22.2 No.62368-1-14	Information Technology
	ANSI/AAMI ES60601-1 & CSA C22.2, No.60601-1:08	Medical
EN	EN60950-1:2006, EN62368-1: 2014	Information Technology
	EN60601-1/A12:2006	Medical
Equipment Protection Class	Class I	See safety agency conditions of acceptibility for details
CE	Meets all applicable directives	
UKCA	Meets all applicable legislation	

	Means of Protection	Category
Primary to Secondary	2 x MOPP (Means of Patient Protection)	IEC60601-1 Ed 3.1
Primary to Earth	1 x MOPP (Means of Patient Protection)	

chanhvinh.com

Mechanical Details

CCL400

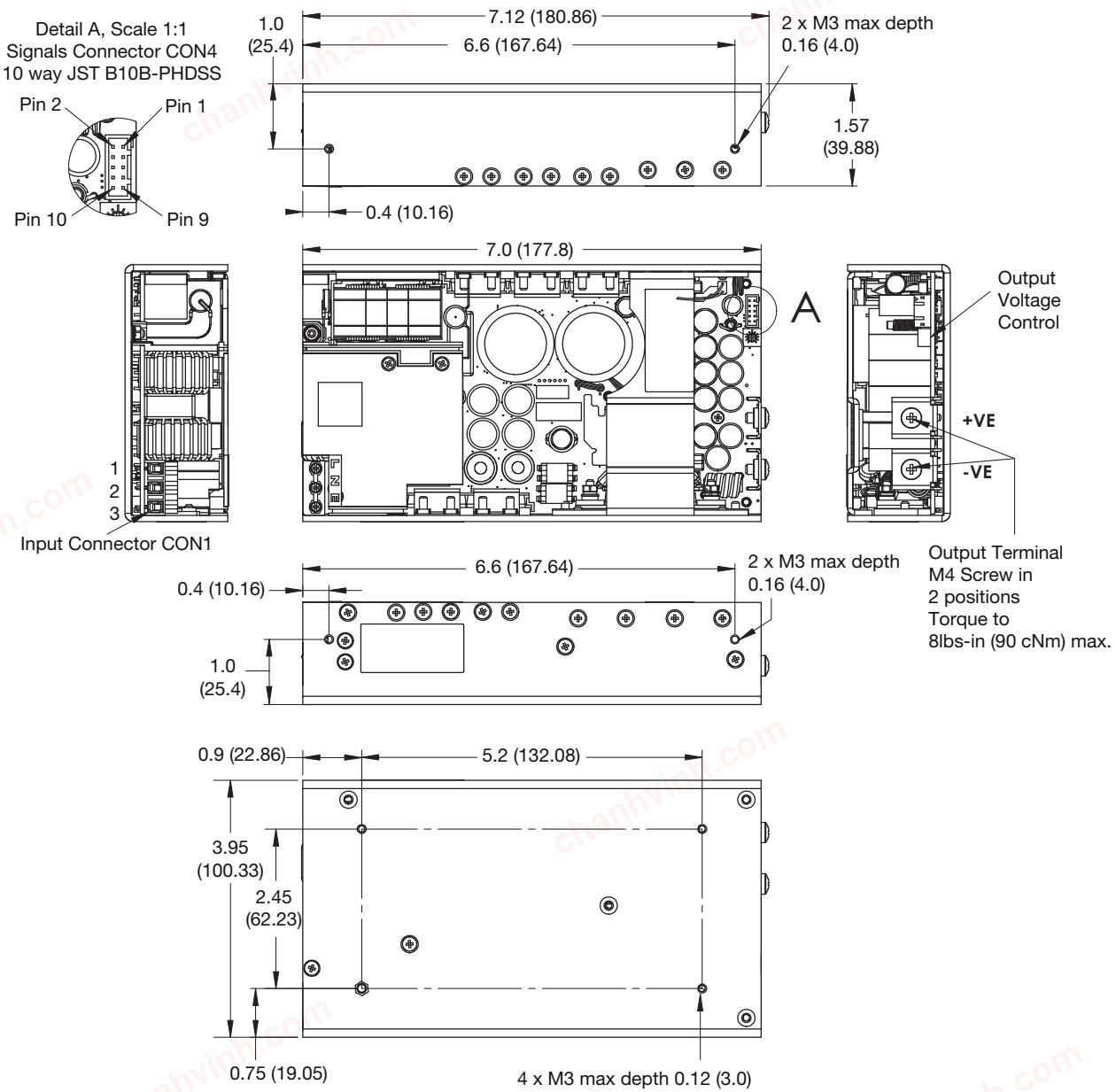

CON1 Input Connector (Dinkle 166-03P3)	
Pin	Function
1	Line
2	Neutral
3	Earth

Output Connector	
Pin	Function
1	+V1
2	+V1 RTN

CON4 Signals Connector (JST B10B-PHDSS)	
Pin	Function
1	+ Standby
2	+ Standby
3	- Standby
4	- Standby
5	Power Fail (Emitter)
6	Power Fail (Collector)
7	Inhibit (Cathode)
8	Inhibit (Anode)
9	- Sense
10	+ Sense

Notes

1. Dimensions shown in inches (mm).
2. CON4 Mating Plug: JST-PHDR-10VS
   Contact: 26-22-AWG (JST-SPHD-001T-P0.5

chanhvinh.com

Mechanical Details

CCL400 Covered (-C)

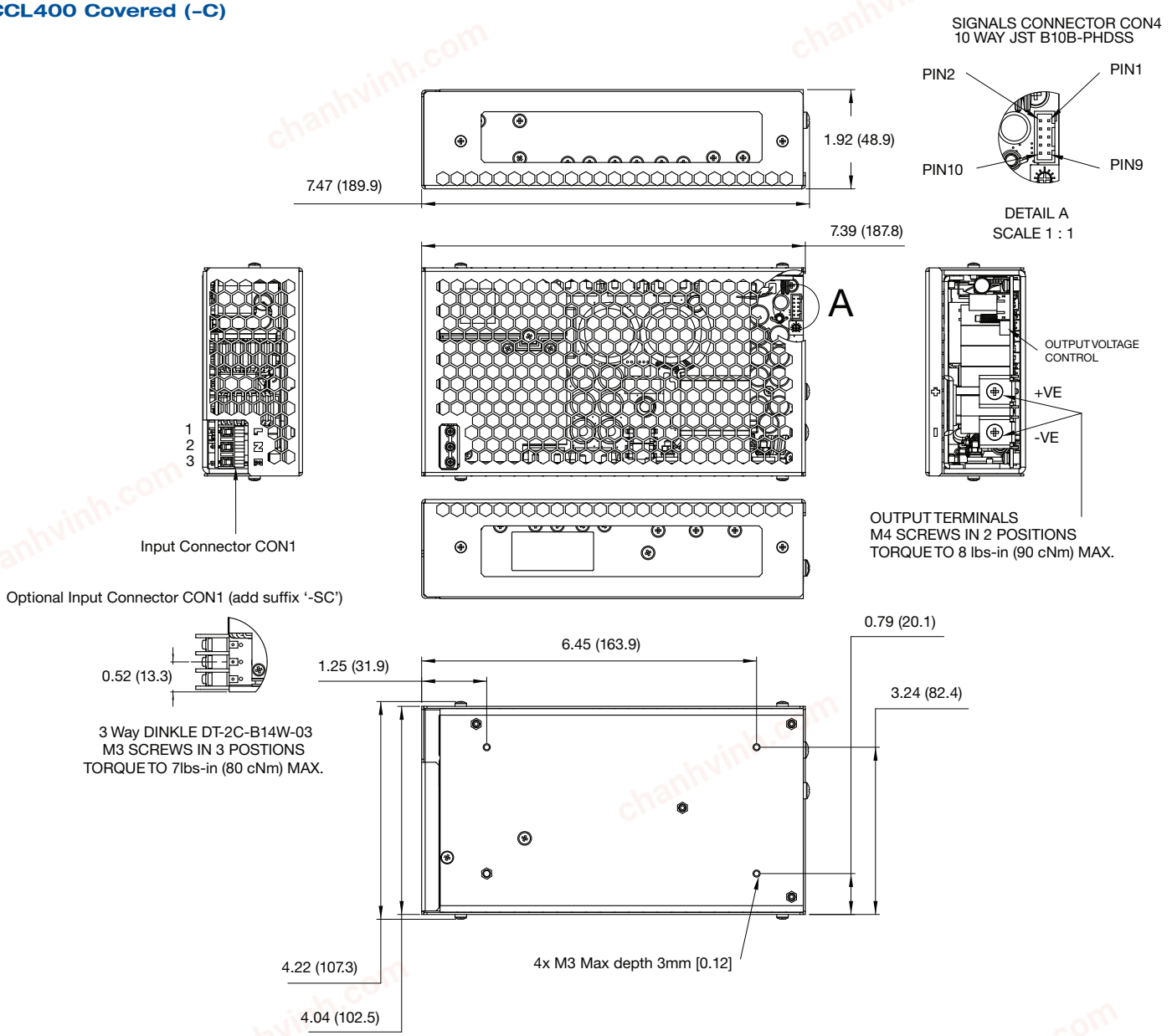

CON1 Input Connector (Dinkle 166-03P3)	
Pin	Function
1	Line
2	Neutral
3	Earth

Output Connector	
Pin	Function
1	+V1
2	+V1 RTN

CON4 Signals Connector (JST B10B-PHDSS)	
Pin	Function
1	+ Standby
2	+ Standby
3	- Standby
4	- Standby
5	Power Fail (Emitter)
6	Power Fail (Collector)
7	Inhibit (Cathode)
8	Inhibit (Anode)
9	- Sense
10	+ Sense

Notes

1. Dimensions shown in inches (mm).
2. CON4 Mating Plug: JST-PHDR-10VS
   Contact: 26-22-AWG (JST-SPHD-001T-P0.5
3. For optional screw terminal input connector, add suffix '-S' to the model number. i.e. CCL400PS12-SC (contact sales for availability).

chanhvinh.com

Thermal Considerations

In order to ensure safe operation of the PSU in the end-use equipment, the temperature of the components listed in the table below must not be exceeded. Temperature should be monitored using K type thermocouples placed on the hottest part of the component (out of direct air flow). See below for component locations.

Temperature Measurements (At Ambient 50 °C)	
Component	Max Temperature °C
L2 Coil	120 °C
TR28 Body	120 °C
C64	105 °C
C39	105 °C

Service Life

The estimated service life of the CCL400 Series is determined by the cooling arrangements and load conditions experienced in the end application. Due to the uncertain nature of the end application this estimated service life is based on the actual measured temperature of a key capacitors with in the product when installed by the end application. The worst case of the two figures should be taken as the indicative service life in 24/7 operation.

The graph below expresses the estimated lifetime of a given component temperature and assumes continuous operation at this temperature.

Estimated Service Life vs Component Temperature

