chanhvinh.com

AC–DC

200/250 Watts
CCB200/250 Series

xppower.com

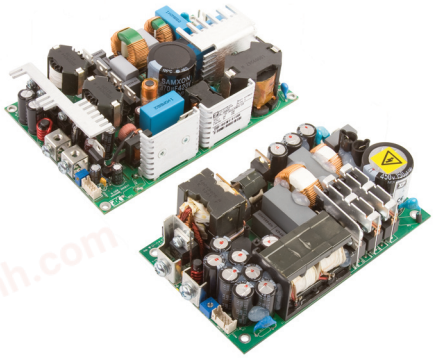

- 200 & 250 W Convection Cooled
- Very Low Heat Loss
- +70 °C Full Power Operation (CCB200)
- Very High Efficiency up to 95%
- 5 V Standby, Inhibit & Power Fail Signals
- IT & Medical (BF) Safety Approvals
- 3 Year Warranty

GREEN XP POWER

Specification

Input

Input Voltage	• See derating curve
Input Frequency	• 47-63 Hz
Input Current	• 1.8/2.4 A typical at 115 VAC, full load (CCB200/250) 0.9/1.2 A typical at 230 VAC, full load (CCB200/250)
Inrush Current	• 30 A typical at 230 VAC, cold start at 25 °C
Power Factor	• >0.9
Earth Leakage Current	• 250 µA max at 264 VAC/60 Hz
No Load Input Power	• <0.5 W when inhibit used (CCB200)
Patient Leakage Current	• 100 µA max, 264 VAC 60 Hz
Input Protection	• Internal T5.0 A/250 V fuse in line and neutral

Output

Output Voltage	• 12-48 VDC (see tables)
Output Voltage Trim	• ±3% CCB250, ±5% CCB200 (See Mechanical Details)
Initial Set Accuracy	• ±0.5% V1, ±5% V2
Minimum Load	• No minimum load required
Start Up Delay	• 1 s typical
Start Up Rise Time	• 0.5 s typical
Hold Up Time	• 16/20 ms min at 90 VAC (CCB250/200)
Drift	• ±0.2% after 20 min warm up
Line Regulation	• ±0.5% max
Load Regulation	• ±1% V1, ±5% V2
Over/Undershoot	• 5% max
Transient Response	• 4% max. deviation, recovery to within 1% in 500 µs for a 50-75-50% load change
Ripple & Noise	• 1% pk-pk, 20 MHz bandwidth
Overvoltage Protection	• 115-140% Vnom, recycle input to reset (V1 only)
Overload Protection	• 125-165% Inom V1 (CCB250), 110 - 150% Inom V1 (CCB200)
Short Circuit Protection	• Continuous trip and restart (hiccup mode)
Temperature Coefficient	• 0.05%/°C
Remote On/Off (Inhibit/Enable)	• Uncommitted isolated optocoupler diode, powered diode inhibits V1
Efficiency	• Up to 95%
Isolation	• 4000 VAC Input to Output 2 x MOPP, 1500 VAC Input to Ground 1 x MOPP, 1500 VAC Output to Ground 1 x MOPP
Switching Frequency	• See longform datasheet
Signals	• Power Fail Inhibit, 5 V Standby
MTBF	• 369/230 kHrs to MIL-HDBK-217F at 25 °C, GB (CCB250/200)

Environmental

Operating Temperature	• See derating curve & longform datasheet
Cooling	• Convection cooled
Operating Humidity	• 95% RH, non-condensing
Storage Temperature	• -40 °C to +85 °C
Operating Altitude	• 3048 m for CCB250, 5000 m for CCB200
Shock	• ±3 x 30g shocks in each plane, total 18 shocks. 30g = 11ms (±0.5 ms), half sine, conforms to EN60068-2-27 & EN60068-2-47
Vibration	• Single axis 10 - 500 Hz at 2g sweep and endurance at resonance in all 3 planes. Conforms to EN60068-2-6

EMC & Safety

Low Voltage PSU EMC	• EN61204-3, high severity level
Emissions	• EN55011/32 level B conducted EN55011/32 level A radiated, See longform datasheet for level A
Harmonic Currents	• EN61000-3-2, class A, >140w class C
Voltage Flicker	• EN61000-3-3
Radiated Immunity	• EN61000-4-3, level 3 Perf Criteria A
EFT/Burst	• EN61000-4-4, level 3 Perf Criteria A
Surge	• EN61000-4-5, installation class 3 Perf Criteria A
Conducted Immunity	• EN61000-4-6, level 3 Perf Criteria A
Dips & Interruptions	• EN61000-4-11, 30% 10 ms, 60% 100 ms, 100% 5000 ms, Perf Criteria A, B, B, EN60601-1-2, 30% 500 ms, 60% 100 ms, 100% 10 ms, 100% 5000 ms, Perf Criteria A, A, A, B - 230 VAC. Consult longform datasheet for 115 V operation.
Safety Approvals	• IEC60950-1 & IEC62368-1 CB report, UL62368-1, EN62368-1, IEC60601-1 CB report, UL60601-1, EN60601-1,EN60601-1, ANSI/AAMI ES60601-1, CSA22.2 No.60601-1 per cUL BF Rated, Including Risk Management, CE & UKCA meets all applicable directives & legislation.

General

chanhvinh.com

CCB200 XP

Models and Ratings

Output Power	Output Voltage V1	Max Output Current V1	5 V Standby (Optional)	Model Number
200 W	12.0 V	16.7 A	5 V/0.5 A	CCB200PS12
200 W	15.0 V	13.3 A	5 V/0.5 A	CCB200PS15
200 W	24.0 V	8.3 A	5 V/0.5 A	CCB200PS24
200 W	28.0 V	7.1 A	5 V/0.5 A	CCB200PS28
200 W	48.0 V	4.2 A	5 V/0.5 A	CCB200PS48
200 W	56.0 V	3.6 A	5 V/0.5 A	CCB200PS56

Notes

1. For covered version add suffix -C to model number e.g. CCB200PS12-C

2. Add suffix -A for 5 V standby option, or -AC for standby and cover options combined.

Mechanical Details

CCB200PSxx Models

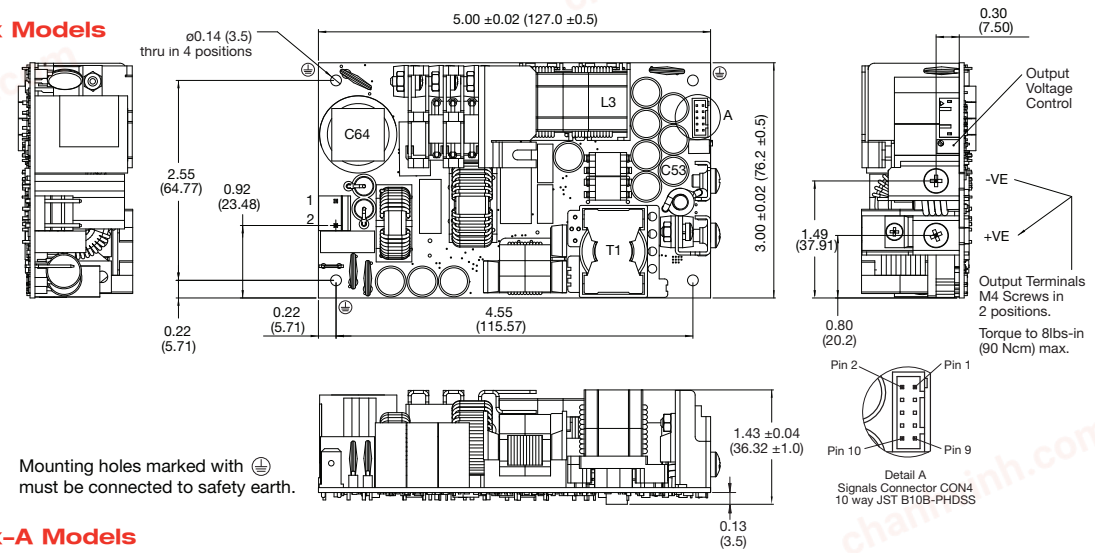

Mounting holes marked with ⏚ must be connected to safety earth.

CCB200PSxx–A Models

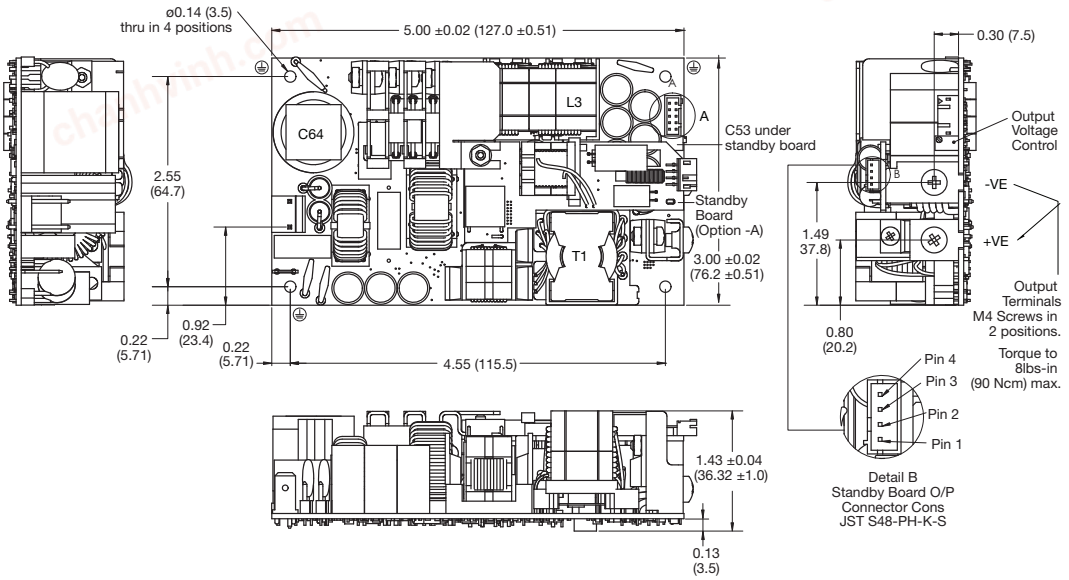

Input Connector CON 1	
1	Line
2	Neutral

Mates with Molex housing 09-50-1031 and Molex series 5194 crimp terminals.

Output Connector CON 3	
1	+VE
2	-VE

Signals Connector CON 4	
1	Power Fail (Emitter)
2	Power Fail (Collector)
3	Inhibit (Cathode)
4	Inhibit (Anode)
5	N/C
6	N/C
7	- VE Sense
8	- VE Sense
9	+VE Sense
10	+VE Sense

Mates with JST PHDR-10VS housing and JST SPHD-001T-P0.5 crimp terminals

Standby Output (Option -A)	
1	+5 V
2	+5 V
3	0 V
4	0 V

Mates with JST PHR-4 housing and JST SPH-002T-P0.5L crimp terminals

Notes

1. All dimensions in inches (mm).
2. Tolerance .xx = ±0.02 (0.50); .xxx = ±0.01 (0.25)
3. Weight: 0.88 lb (400 g) approx

chanhvinh.com

Mechanical Details

CCB200PSxx–C Models

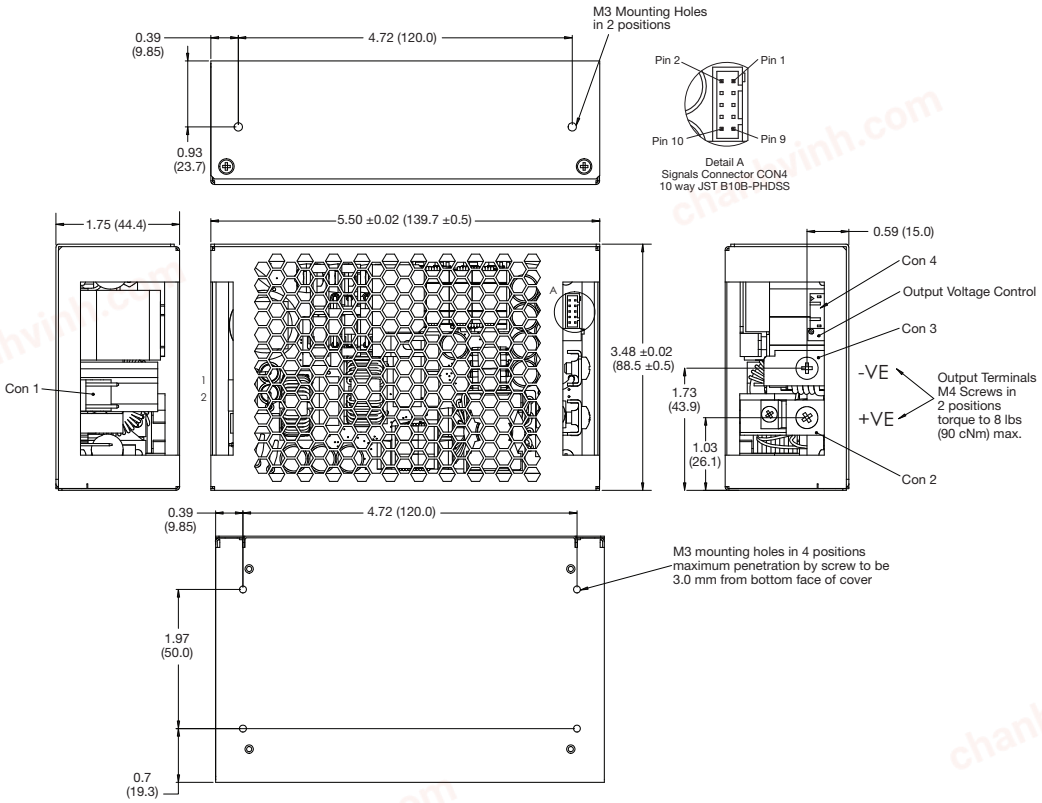

CCB200PSxx–AC Models

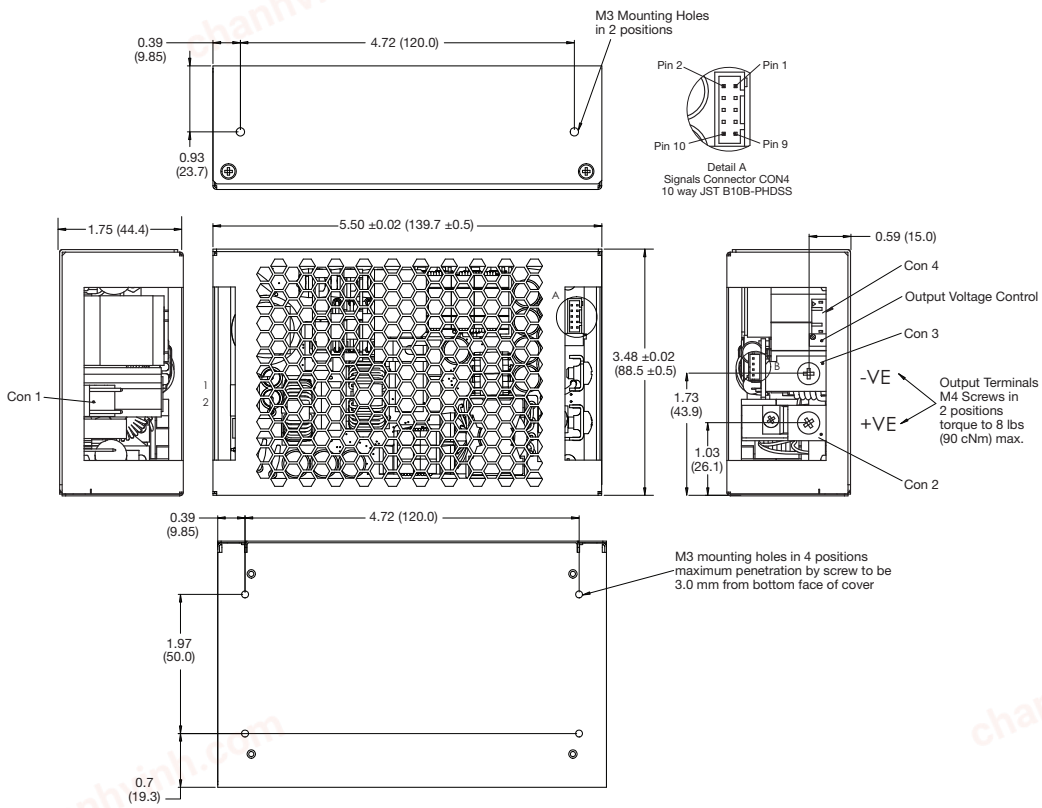

Input Connector CON 1	
1	Line
2	Neutral

Mates with Molex housing 09-50-1031 and Molex series 5194 crimp terminals.

Output Connector
Con 2, +VE
Con 3, -VE

Signals Connector CON 4	
1	Power Fail (Emitter)
2	Power Fail (Collector)
3	Inhibit (Cathode)
4	Inhibit (Anode)
5	N/C
6	N/C
7	- VE Sense
8	- VE Sense
9	+VE Sense
10	+VE Sense

Mates with JST PHDR-10VS housing and JST SPHD-001T-P0.5 crimp terminals

Standby Output (Option -A)	
1	+5 V
2	+5 V
3	0 V
4	0 V

Mates with JST PHR-4 housing and JST SPH-002T-P0.5L crimp terminals

Notes

1. All dimensions in inches (mm).
2. Tolerance .xx = ±0.02 (0.50); .xxx = ±0.01 (0.25)
3. Weight: 1.36 lb (618 g) approx

chanhvinh.com

Models and Ratings

CCB250 XP

Output Power		Output Voltage V1	Output Current V1		Standby Supply V2	Model Number
Nominal	Peak[1]		Nominal	Peak[1]		
250 W	300 W	12.0 V	20.8 A	25.00 A	5.0 V/0.5 A	CCB250PS12
250 W	300 W	15.0 V	16.7 A	20.00 A	5.0 V/0.5 A	CCB250PS15
250 W	300 W	24.0 V	10.4 A	12.50 A	5.0 V/0.5 A	CCB250PS24
250 W	300 W	28.0 V	8.9 A	10.70 A	5.0 V/0.5 A	CCB250PS28
250 W	300 W	36.0 V	6.9 A	8.30 A	5.0 V/0.5 A	CCB250PS36
250 W	300 W	48.0 V	5.2 A	6.25 A	5.0 V/0.5 A	CCB250PS48

Notes

1. Peak duration is 500ms max, average power must not exceed 250 W.

Mechanical Details

3D MODELS AVAILABLE ONLINE

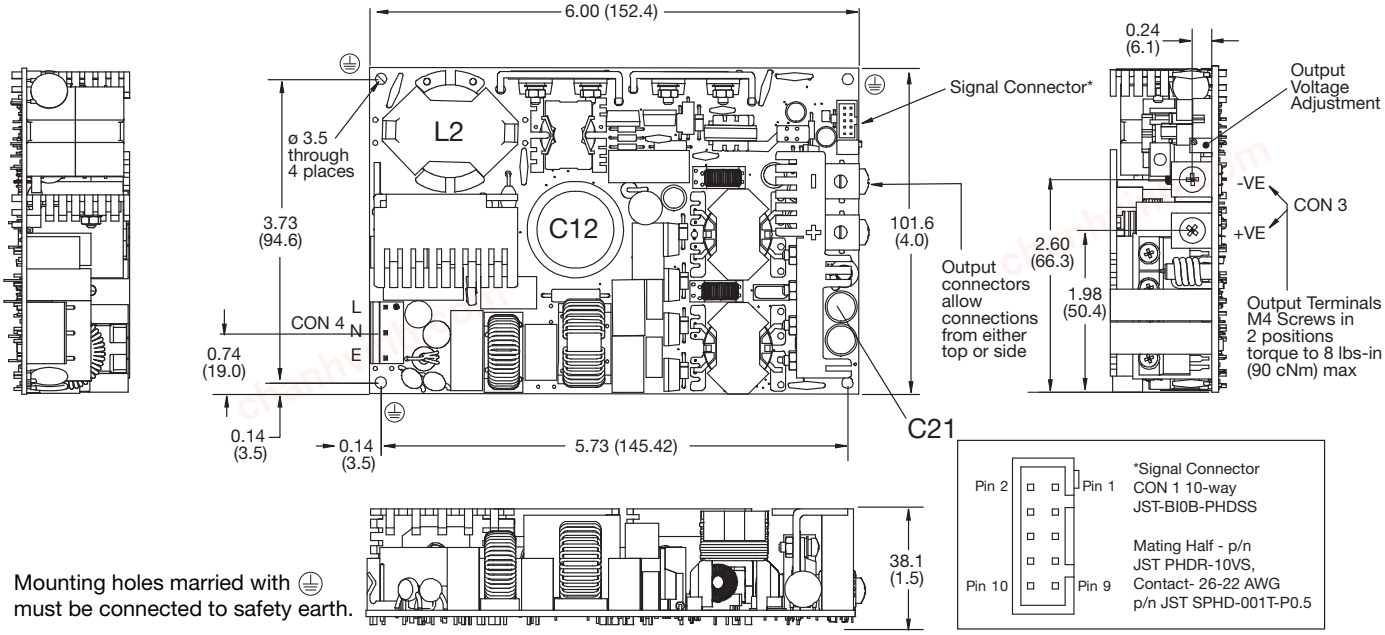

Mounting holes married with ⏚ must be connected to safety earth.

Signals Connector CON 1	
1	5 V Standby Return
2	5 V Standby
3	5 V Standby Return
4	5 V Standby
5	5 V Standby Return
6	5 V Standby
7	Power Fail (Collector)
8	Power Fail (Emitter)
9	Remote On / Off (Cathode)
10	Remote On / Off (Anode)

Output Connector CON 3	
1	+VE
2	-VE

Input Connector CON 4	
1	Line
2	Neutral
3	Earth

Mates with Molex housing 09-50-3051 and Molex series 2478 crimp terminals.

Notes

1. All dimensions in inches (mm).
2. Tolerance .xx = ±0.02 (0.50); .xxx = ±0.01 (0.25)
3. Weight 1.7 lb (780 g) approx

Mechanical Details

Signals – CCB200

Power Fail

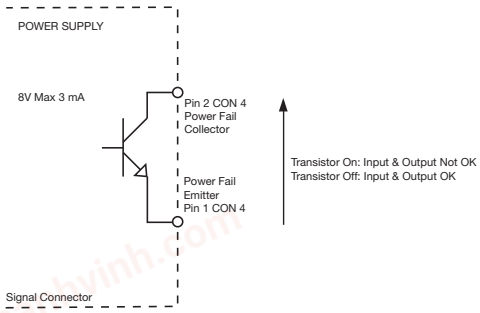

Inhibit (High)

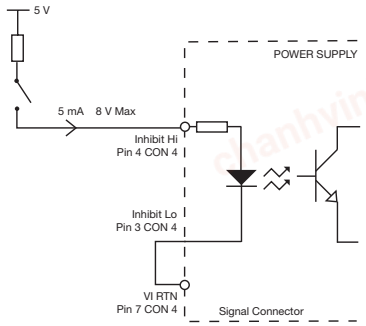

Inhibit (Low)

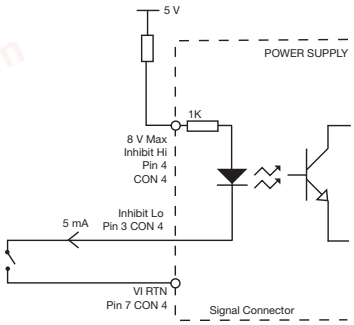

Signals	Notes & Conditions
Power Fail	Uncomitted opto isolated transistor, normally off when AC is good (see fig.5) Provides 5 - 15ms warning of loss of output from AC failure
Remote On/Off (Inhibit/Enable)	Uncommited isolated optocoupler diode, powered diode inhibits the supply (see fig.6 & 7)
5 V Standby (Optional -A)	5 V/0.5 A Supply, always present when AC applied

Input Voltage & Temperature Derating – CCB200

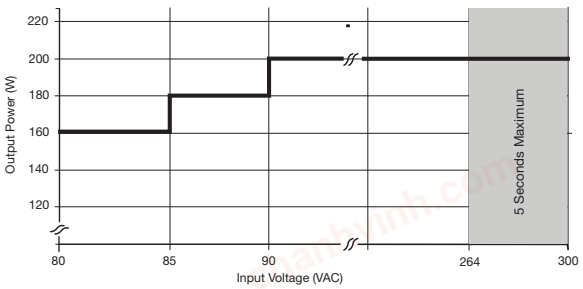

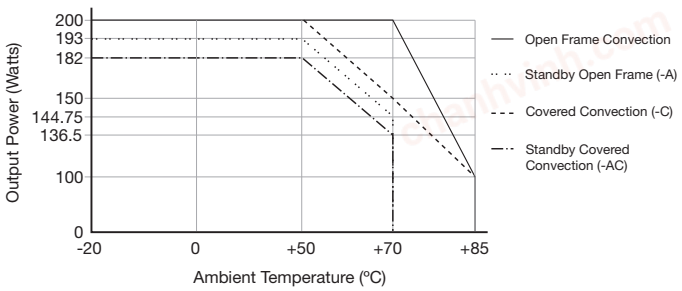

Signals – CCB250

Power Fail

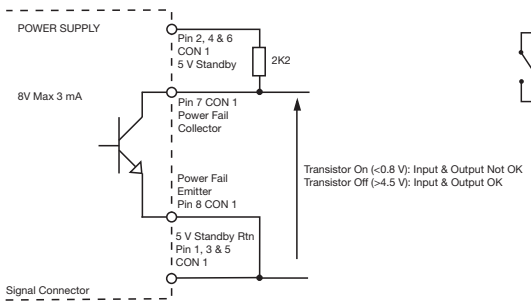

Inhibit (High)

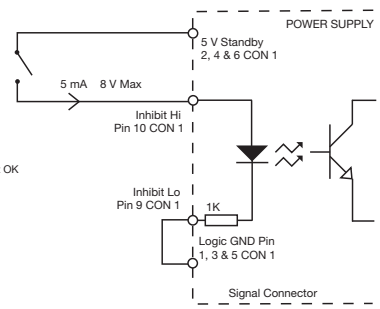

Inhibit (Low)

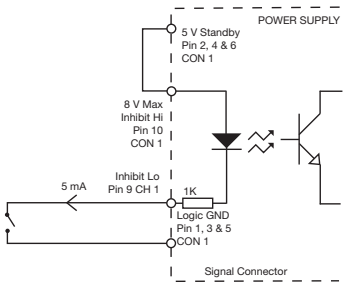

Signals	Notes & Conditions
Power Fail	Uncommitted opto isolated transistor, normally off when AC is good Provides ≥ 5 ms (typically 20-30 ms) warning of loss of output from AC failure
Remote On/Off (Inhibit/Enable)	Uncommitted isolated optocoupler diode, powered diode inhibits the supply
Standby Supply V2	Isolated 5 V/0.5 A supply, always present when AC supplied.

Input Voltage & Temperature Derating – CCB250

