chanhvinh.com

# ALM85 series

XP Power

## 85W EXTERNAL WALL PLUG

AC-DC power supplies

The ALM85 has both medical (2 x MOPP) and ITE safety approvals, available as class I, or class II construction with a smooth wipe clean IP32 sealed case that is ideal for medical applications.

The standard class I version has an IEC320-C14 inlet, the class II version with suffix C2-8 has a polarized IEC320-C8 inlet.



### Features

- Regulated single outputs 12V to 24VDC
- Medical & ITE safety approvals
- Energy efficiency level VI
- EU CoC tier 2 compliant
- 4th edition medical EMC
- IP32 environmental rating
- Class I & class II versions
- <0.15W standby power
- Low earth leakage current
- 0°C to +60°C operation
- 3 year warranty

### Applications

Medical Diagnostics

Home Healthcare

Healthcare

### Dimensions

135.0 x 62.0 x 37.0mm (5.31" x 2.44" x 1.45")

### Documentation

For further information click the link or scan the code

→ xppower.com

### Models & ratings

| Model number(1,2) | Output voltage | Output current | Total regulation | Output power |
|---|---|---|---|---|
| ALM85US12 | 12.0VDC | 6.67A | ±5% | 80W |
| ALM85US15 | 15.0VDC | 5.33A | | |
| ALM85US19 | 19.0VDC | 4.47A | | 85W |
| ALM85US24 | 24.0VDC | 3.54A | | |

**Notes:**

1. For class II versions, add suffix 'C2-8' to the end of the part number e.g. ALM85US24C2-8.
2. For optional input connector retention clip add suffix '-A' to the model number, e.g. ALM85US24-A (not available for C2 versions)

chanhvinh.com

# ALM85 series

AC-DC power supplies

## Input

| Characteristic | Minimum | Typical | Maximum | Units | Notes & conditions |
|---|---|---|---|---|---|
| Input voltage | 80 | | 264 | VAC | Derate linearly from 100% load at 90VAC to 80% load at 80VAC. 300VAC/5s maximum |
| Input frequency | 47 | | 63 | Hz | |
| Input current | | 1.7/0.9 | | A | Measured at 115/230VAC |
| Inrush current | | | 60/120 | A | 115/230VAC, cold start at +25°C |
| Power factor | | | | | EN61000-3-2 Class A |
| Earth leakage current | | | 250 | µA | 264VAC, 60Hz |
| No load input power | | | 0.15 | W | |
| Input protection | T3.15A/250 VAC internal fuse in both line & neutral | | | | |

## Output

| Characteristic | Minimum | Typical | Maximum | Units | Notes & conditions |
|---|---|---|---|---|---|
| Output voltage | 12 | | 24 | VDC | See models and ratings table |
| Initial set accuracy | | | ±2 | % | At 50% load |
| Minimum load | No minimum load required | | | | |
| Start up delay | | | 2 | s | |
| Start up rise time | | | 150 | ms | |
| Hold up time | 10/20 | | | ms | Full load and 115/230VAC |
| Line regulation | | | ±0.5 | % | |
| Total regulation | | | ±5 | % | |
| Transient response | | | 4 | % | Maximum deviation, recovering to less than 1% within 500µs for 25% step load |
| Ripple and noise | | | 1.5 | % pk-pk | Measured with 20MHz bandwidth and 10µF electrolytic in parallel with 0.1µF ceramic capacitor. |
| Overshoot | | | 10 | % | At turn on / turn off |
| Overload protection | 115 | | 175 | % | |
| Overvoltage protection | | | 150 | % | Recycle mains to reset |
| Short circuit protection | Trip and restart (hiccup), auto resetting | | | | |
| Thermal protection | Measured internally, auto resetting | | | | |
| Temperature coefficient | | 0.02 | | %/°C | |
| Patient leakage current | | | 95 | µA | 264VAC, 60Hz |

## General

| Characteristic | Minimum | Typical | Maximum | Units | Notes & conditions |
|---|---|---|---|---|---|
| Efficiency | 88 | | | % | See models and ratings table and curves. |
| Isolation: input to output | | | 4000 | VAC | 2 x MOPP |
| input to ground | | | 1500 | VAC | 1 x MOPP (Class I versions only) |
| output to ground | | | 500 | VAC | Class I versions only |
| Switching frequency | | 65 | | kHz | PWM |
| Power density | | 0.277 (4.45) | | $cm^3$ ($W/in^3$) | |
| Mean time between failure | | >300 | | khrs | MIL-HDBK-217F at 25°C GB |
| Weight | | 355 (0.78) | | g (lb) | |

chanhvinh.com

# ALM85 series

AC-DC power supplies

## Environmental

| Characteristic | Minimum | Typical | Maximum | Units | Notes & conditions |
|---|---|---|---|---|---|
| Operating Temperature | 0 | | +60 | °C | Derate from 100% load at 40°C to 30% load at 60°C |
| Cooling | Natural convection | | | | |
| Operating Humidity | 5 | | 95 | %RH | Non-condensing |
| Storage Temperature | -20 | | +80 | °C | |
| Operating Altitude | | | 5000 | m | |
| Shock | IEC68-2-27, 30g, 11ms half sine, 3 times in each of 6 axes | | | | |
| Vibration | IEC68-2-6, 10-500Hz, 2g 10 mins/sweep, 60 mins for each of 3 axes | | | | |

## Emissions - EMC

| Phenomenon | Standard | Test level | Notes & conditions |
|---|---|---|---|
| Emissions | EN55011, EN55032 | Level B | Conducted and radiated |
| Harmonic currents | EN61000-3-2 | Class A | |
| Voltage flicker | EN61000-3-3 | | |

## Emissions - immunity

| Phenomenon | Standard | Test level | Criteria | Notes & conditions |
|---|---|---|---|---|
| ESD immunity | EN61000-4-2 | 3 | A | ±15kV air/±8kV contact |
| Radiated immunity | EN61000-4-3 | 10V/m | A | 80-2700MHz. IEC60601-1-2 Ed.4 at other frequencies |
| EFT/burst | EN61000-4-4 | 3 | A | |
| Surge | EN61000-4-5 | Installation class 3 | A | |
| Conducted | EN61000-4-6 | 10V | A | |
| Magnetic fields | EN61000-4-8 | 4 | A | |
| Dips and interruptions | EN61000-4-11 | Dip: 30% 500ms | A/B | High line/low line |
| | | Dip: 60% 200ms | A/B | High line/low line |
| | | Dip: 80% 5000ms | B | |
| | | Int: 100% 10ms | A | |
| | | Int: 100% 20ms | A | |
| | | Int: 100% 5000ms | B | |
| | EN60601-1-2 | Dip: 30% 25 AC Cycles | A | 230VAC 100% load, 100VAC 80% |
| | | Dip: 60% 5 AC Cycles | A | 230VAC 100% load, 100VAC 30% |
| | | Int: 100% 0.5 AC Cycles | A | |
| | | Int: 100% 1.0 AC Cycles | A | 230VAC 100% load, 100VAC 50% |
| | | Int: 100% 250 AC Cycles | B | |

## Safety approvals

| Safety agency | Standard | Notes & conditions |
|---|---|---|
| UL | UL62368-1 | Information technology |
| EN | EN62368-1 | Information technology |
| | EN60601-1 | Medical |
| CB | IEC62368-1, IEC60950-1 | Information technology |
| | IEC60601-1 | Medical |
| Others | CSA C22.2 No. 60601, CCC, PSE, KC & RCM | May require additional importer information |
| CE | Meets all applicable legislation | |
| UKCA | Meets all applicable legislation | |

# ALM85 series

AC-DC power supplies

## Derating curve

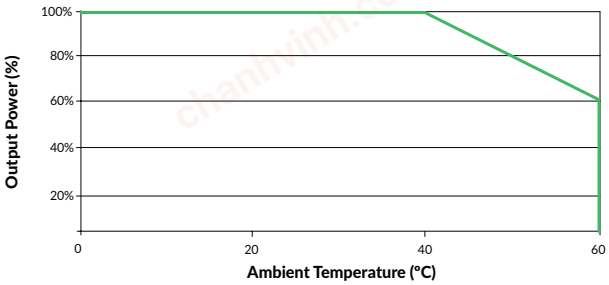


## Efficiency curve

### ALM85US12

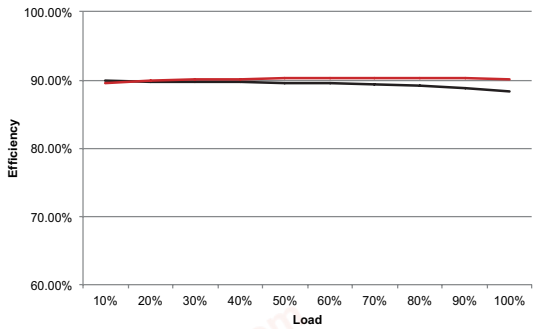


### ALM85US24

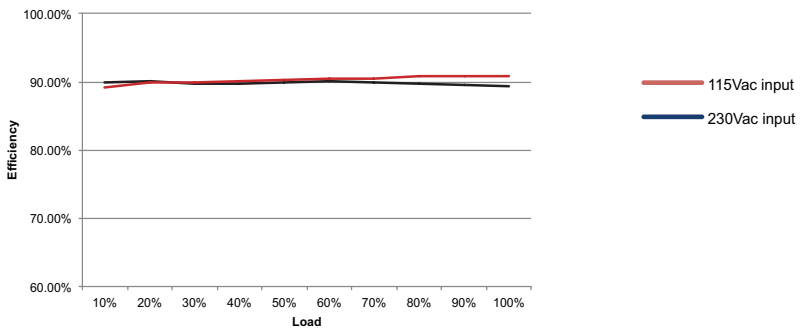


## Mechanical details

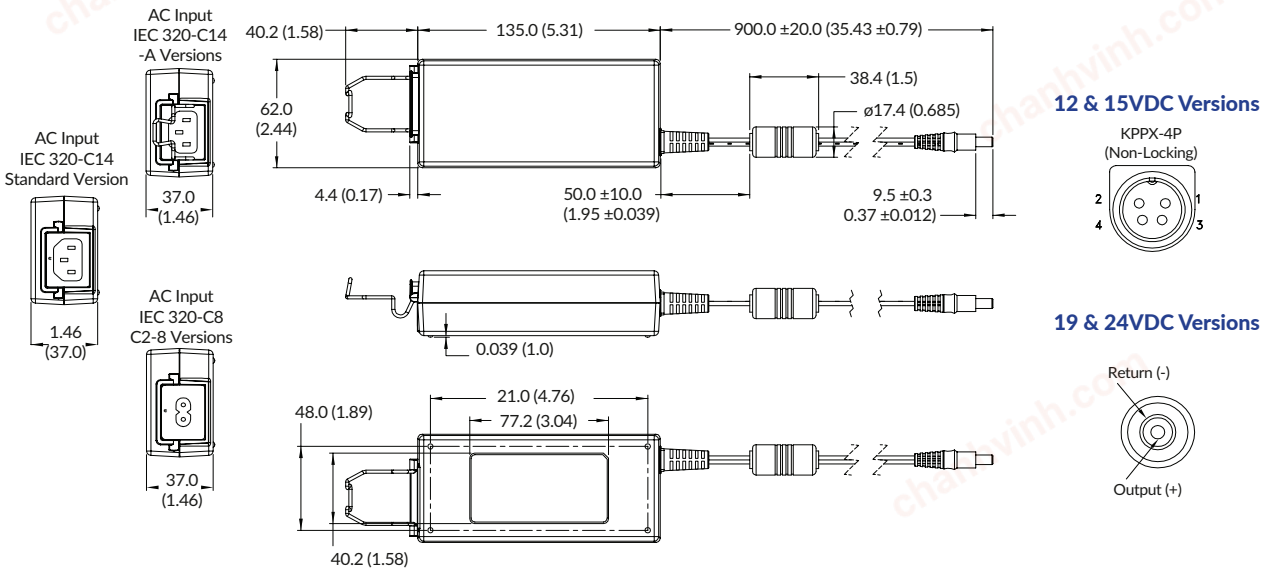


### 12 & 15VDC Versions




### 19 & 24VDC Versions




| Pin | Connection |
|---|---|
| 1 | +Vout |
| 2 | +Vout |
| 3 | RTN |
| 4 | RTN |
| Shell | Not connected |

**Notes:**

1. All dimensions shown in mm (inches). Tolerance is 0.5 (0.02) maximum, except output cable length.
2. Weight: 355g (0.78lbs) approx.
3. For European mains lead order part EU-MAINS-IEC for C14 versions, or EU-MAINS-8 for C8 versions.
4. For UK mains lead order part UK-MAINS-IEC for C14 versions, or UK-MAINS-8 for C8 versions.
5. For US mains lead order part US-MAINS-IEC for C14 versions, or US-MAINS-8 for C8 versions.
6. Output connector: 12VDC & 15VDC: 4 pin power din with pin 1 & 2 - posiitive and pin 3 & 4 - return, equivalent to KPPX-4P (non-locking). 19VDC & 24VDC: DC barrel jack; 5.5mm outer diameter, 2.5mm inner diameter with centre positive.