chanhvinh.com

Dimensions: [mm]

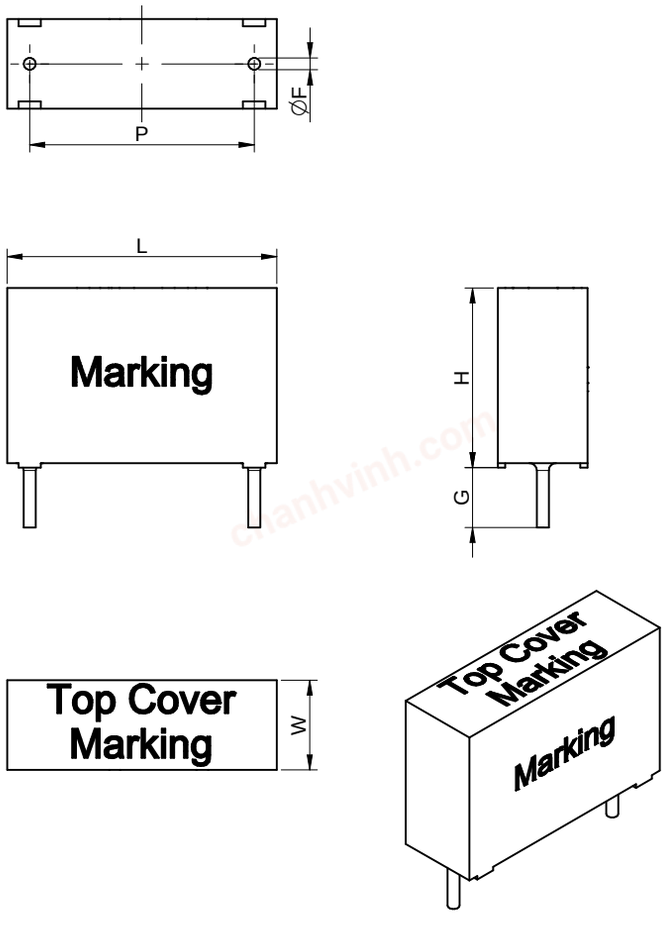

Properties		Value	Unit	Tol.
Pitch	P	22.5	mm	±0.5
Length	L	26	mm	±0.5
Width	W	6	mm	±0.5
Height	H	12	mm	±0.5
Pin length	G	4	mm	±0.5
Pin Diameter	Ø F	0.8	mm	±0.05
Pitch	p	22.5	mm	±0.5
Hole Diameter	Ø f	1.1	mm	

Recommended Land Pattern: [mm]

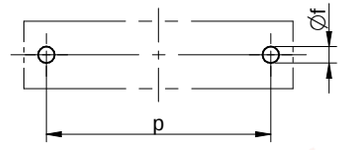

Schematic:

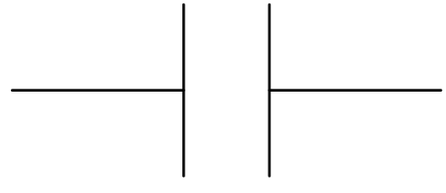

Electrical Properties:

Properties	Test conditions		Value	Unit	Tol.
Capacitance	1 V/ 1 kHz ± 0.2 kHz	C	330	nF	±10%
Rated Voltage		U_R	310	V (AC)	max.
Rated Voltage		U_R	630	V (DC)	max.
Insulation Resistance	1 min @ 100 V (DC)	R_{ISO}	30000	mΩ	min.
Dissipation Factor	@ 1 kHz	DF	0.1	%	max.
Dissipation Factor	@ 10 kHz	DF	0.2	%	max.
Dissipation Factor	@ 100 kHz	DF	2	%	max.
Rate of Voltage Rise		dV/dt	140	V/µs	max.
Dielectric Strength Pin to Pin	1 min./ +20 °C		1333	V (DC)	
Dielectric Strength Pin to Case	1 min./ +20 °C		2000	V (AC)	

General Information:

X2-Safety Class Capacitor; MKP - Metallized Polypropylene		
Storage Conditions	5-35 °C, < 75% RH	
Operating Temperature	-40 °C up to +105 °C	
Maxium Selfheating (Rated)	7	°C
Climate Category: 40/ 105/ 56/ B		
Test conditions of Electrical Properties: +20 °C, 35 % RH if not specified differently		
FIT according to separate documentation		
Component conform to REACh and RoHS requirements and standards		
Only designed to be used in parallel to the mains, not approved for series applications.		

Würth Elektronik eiSos GmbH & Co. KG
EMC & Inductive Solutions

Max-Eyth-Str. 1
74638 Waldenburg
Germany
Tel. +49 (0) 79 42 945 - 0

www.we-online.com
eiSos@we-online.com

WÜRTH ELEKTRONIK

CREATED	CHECKED	GENERAL TOLERANCE	PROJECTION METHOD
KaS	PSL	DIN ISO 2768-1m	

DESCRIPTION: **WCAP-FTXX Film Capacitors**

TECHNICAL REFERENCE: MXXP225334K310ACPP45004

ORDER CODE: **890334026007CS**

SIZE	REVISION	STATUS	DATE (YYYY-MM-DD)	BUSINESS UNIT	PAGE
Pitch 22.5	002.000	Valid	2018-01-01	eiCap	1/8

This electronic component has been designed and developed for usage in general electronic equipment only. This product is not authorized for use in equipment where a higher safety standard and reliability standard is especially required or where a failure of the product is reasonably expected to cause severe personal injury or death, unless the parties have executed an agreement specifically governing such use. Moreover Würth Elektronik eiSos GmbH & Co KG products are neither designed nor intended for use in areas such as military, aerospace, aviation, nuclear control, submarine, transportation (automotive control, train control, ship control), transportation signal, disaster prevention, medical, public information network etc.. Würth Elektronik eiSos GmbH & Co KG must be informed about the intent of such usage before the design-in stage. In addition, sufficient reliability evaluation checks for safety must be performed on every electronic component which is used in electrical circuits that require high safety and reliability functions or performance.

chanhvinh.com

Product Marking:

1st Line right	Matchcode: FTXX
2nd Line right	Rated Voltage: 310 V~
3rd Line right	Climate Category: 40/ 105/ 56/ B
2nd Line left	Capacitance & Tolerance Code: 334K (Basis pF)
Bottom Line	Certificates: ENEC, cULUS, CQC & Internal Marking
Top Cover Marking P < 15	Date Code: YWW
Top Cover Marking P ≥ 15	Date Code & Capacitance & Tolerance Code

Certification:

Properties	Standard	File
ENEC10 by VDE	IEC 60384-14	40038405
cULus	UL 60384-14 / CAN/CSA - E60384-14	E345659
CQC	IEC 60384-14	13001104051

Mechanical Properties:

Properties	Test Conditions		Lead Diameter [mm]	Force [N]	condition
Termination Robustness	IEC 600668 - 2 - 21	Pull Test	0.5 to ≤ 0.8	10	min. 10 sec.
			0.9 to ≤ 1.25	20	min. 10 sec.
		Bend Test	0.5 to ≤ 0.8	5	min. 2 cycles
			0.9 to ≤ 1.25	10	min. 2 cycles

Environmental Tests:

Properties	Standard	
Active Flammability	IEC 60384-14	max. 24 surge pulses @ 2.5 kV (one pulse every 5 seconds)
Passive Flammability	IEC 60384-14	in combination with IEC 60381 - 1 & IEC 60695 - 11 - 5
Vibration	IEC 60068 - 2 - 6	all 3 directions, 2 hours each @ 10 - 55 - 10 Hz, amplitude 0.75 mm or 10 g

Properties	Standard	
Damp Heat	IEC 60068 - 2 - 78	40°C, 95% RH, 56 days
Temperature Cycles	IEC 60068 - 2 - 14	5 cycles, upper and lower temperature 30 min. each, 30 sec. transfer time
Charge/ Discharge Test	IEC 60384 - 14	√2 x UR @ 100 V/µs
Surge Test	IEC 60384 - 14	2.5 kV Surge impulses

Würth Elektronik eiSos GmbH & Co. KG
EMC & Inductive Solutions

Max-Eyth-Str. 1
74638 Waldenburg
Germany
Tel. +49 (0) 79 42 945 - 0

www.we-online.com
eiSos@we-online.com

WÜRTH ELEKTRONIK

CREATED	CHECKED	GENERAL TOLERANCE	PROJECTION METHOD
KaS	PSL	DIN ISO 2768-1m	

DESCRIPTION: **WCAP-FTXX Film Capacitors**

TECHNICAL REFERENCE: MXXP225334K310ACPP45004

ORDER CODE: **890334026007CS**

SIZE	REVISION	STATUS	DATE (YYYY-MM-DD)	BUSINESS UNIT	PAGE
Pitch 22.5	002.000	Valid	2018-01-01	eiCap	2/8

This electronic component has been designed and developed for usage in general electronic equipment only. This product is not authorized for use in equipment where a higher safety standard and reliability standard is especially required or where a failure of the product is reasonably expected to cause severe personal injury or death, unless the parties have executed an agreement specifically governing such use. Moreover Würth Elektronik eiSos GmbH & Co KG products are neither designed nor intended for use in areas such as military, aerospace, aviation, nuclear control, submarine, transportation (automotive control, train control, ship control), transportation signal, disaster prevention, medical, public information network etc.. Würth Elektronik eiSos GmbH & Co KG must be informed about the intent of such usage before the design-in stage. In addition, sufficient reliability evaluation checks for safety must be performed on every electronic component which is used in electrical circuits that require high safety and reliability functions or performance.

chanhvinh.com

Dissipation Factor vs. Temperature:

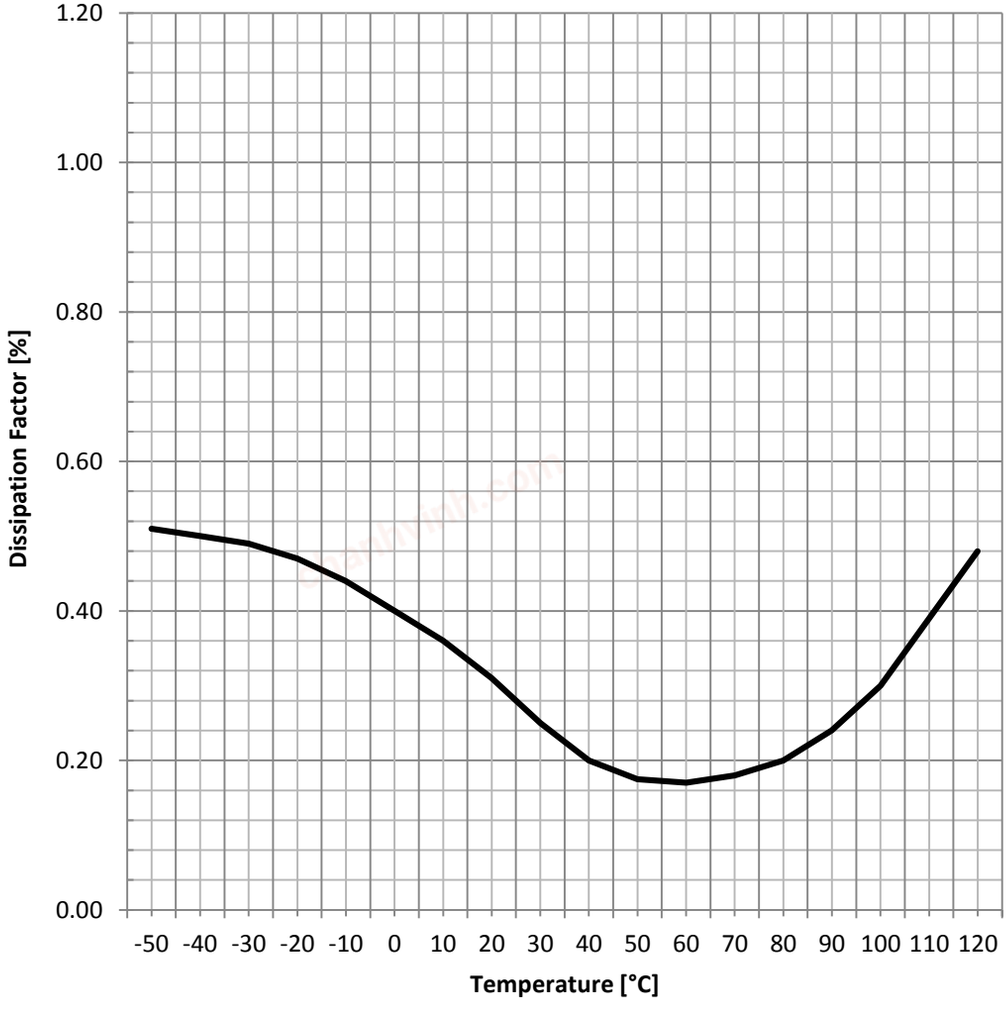

Dissipation Factor vs. Frequency:

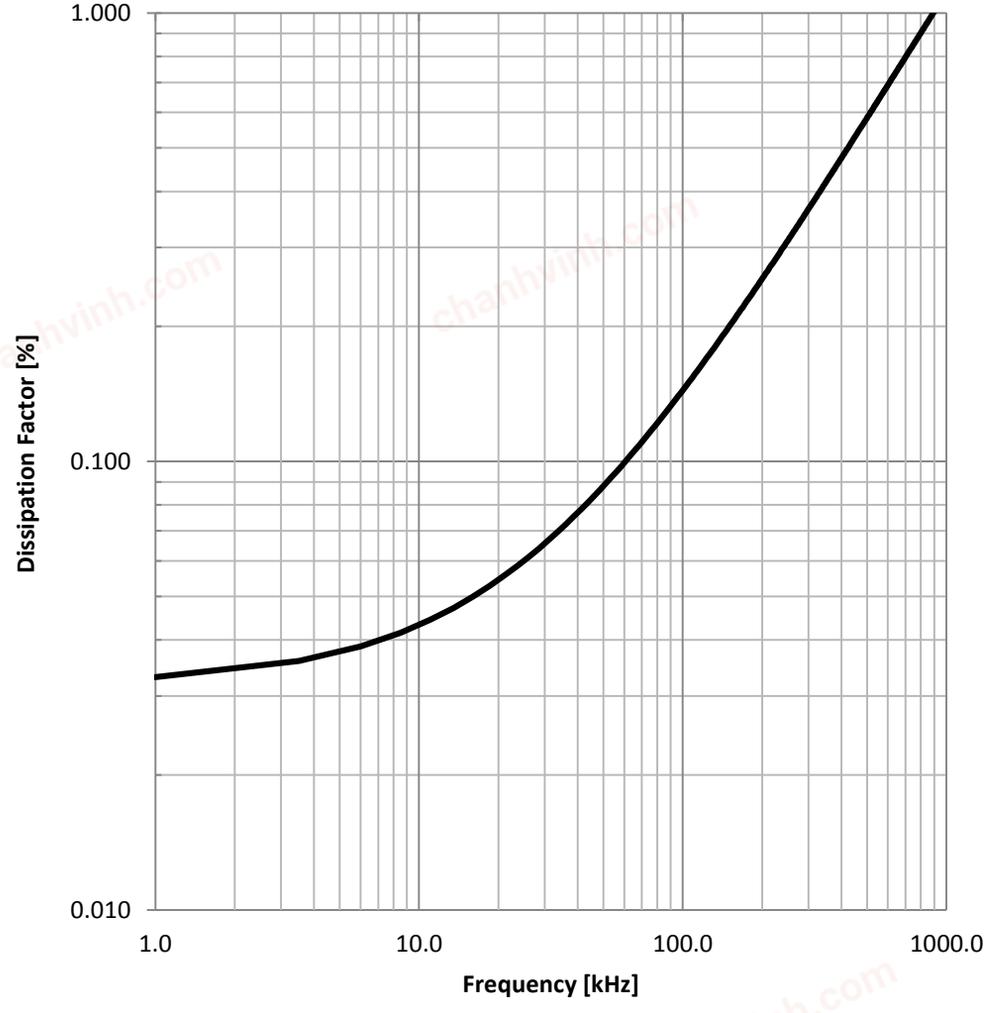

Würth Elektronik eiSos GmbH & Co. KG
EMC & Inductive Solutions

Max-Eyth-Str. 1
74638 Waldenburg
Germany
Tel. +49 (0) 79 42 945 - 0

www.we-online.com
eiSos@we-online.com

WÜRTH ELEKTRONIK

CREATED	CHECKED	GENERAL TOLERANCE	PROJECTION METHOD
KaS	PSL	DIN ISO 2768-1m	

DESCRIPTION: **WCAP-FTXX Film Capacitors**

TECHNICAL REFERENCE: MXXP225334K310ACPP45004

ORDER CODE: **890334026007CS**

SIZE	REVISION	STATUS	DATE (YYYY-MM-DD)	BUSINESS UNIT	PAGE
Pitch 22.5	002.000	Valid	2018-01-01	eiCap	3/8

This electronic component has been designed and developed for usage in general electronic equipment only. This product is not authorized for use in equipment where a higher safety standard and reliability standard is especially required or where a failure of the product is reasonably expected to cause severe personal injury or death, unless the parties have executed an agreement specifically governing such use. Moreover Würth Elektronik eiSos GmbH & Co KG products are neither designed nor intended for use in areas such as military, aerospace, aviation, nuclear control, submarine, transportation (automotive control, train control, ship control), transportation signal, disaster prevention, medical, public information network etc.. Würth Elektronik eiSos GmbH & Co KG must be informed about the intent of such usage before the design-in stage. In addition, sufficient reliability evaluation checks for safety must be performed on every electronic component which is used in electrical circuits that require high safety and reliability functions or performance.

chanhvinh.com

Capacitance Change vs. Frequency:

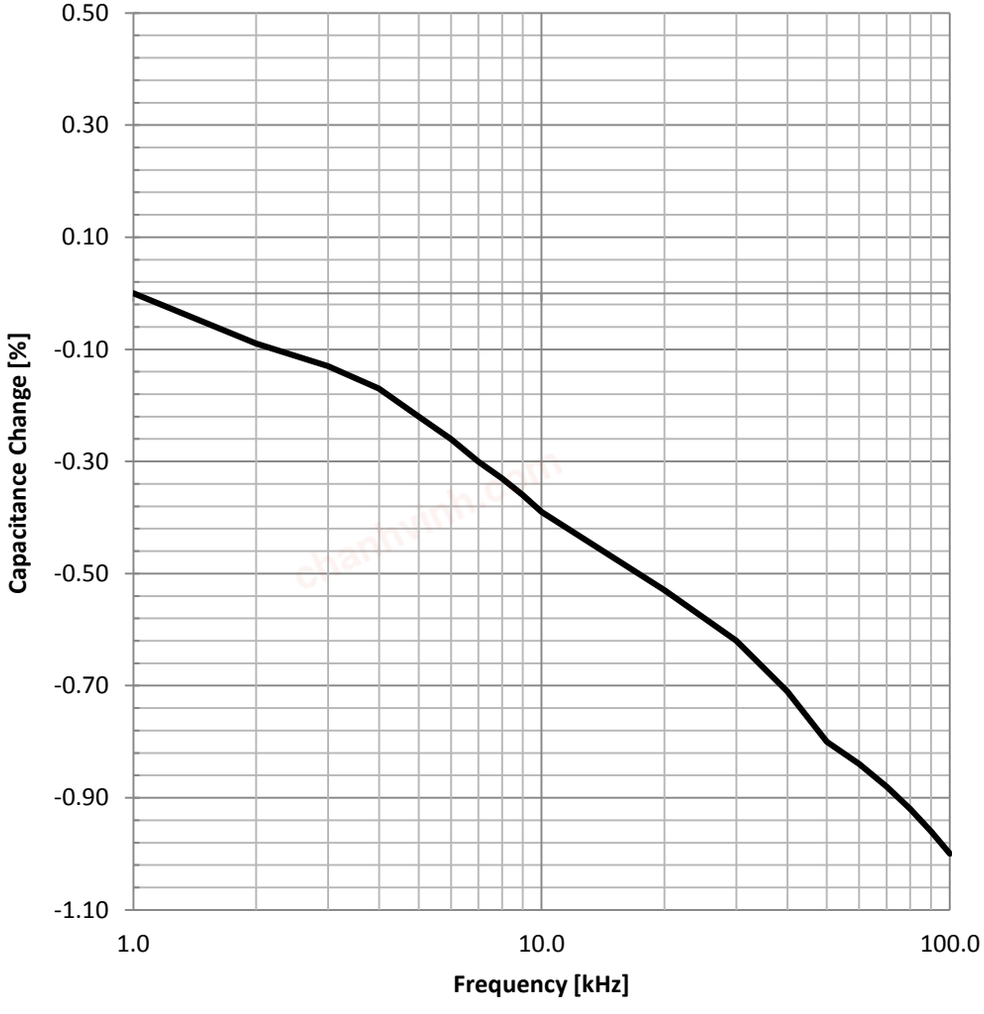

Capacitance Change vs. Temperature:

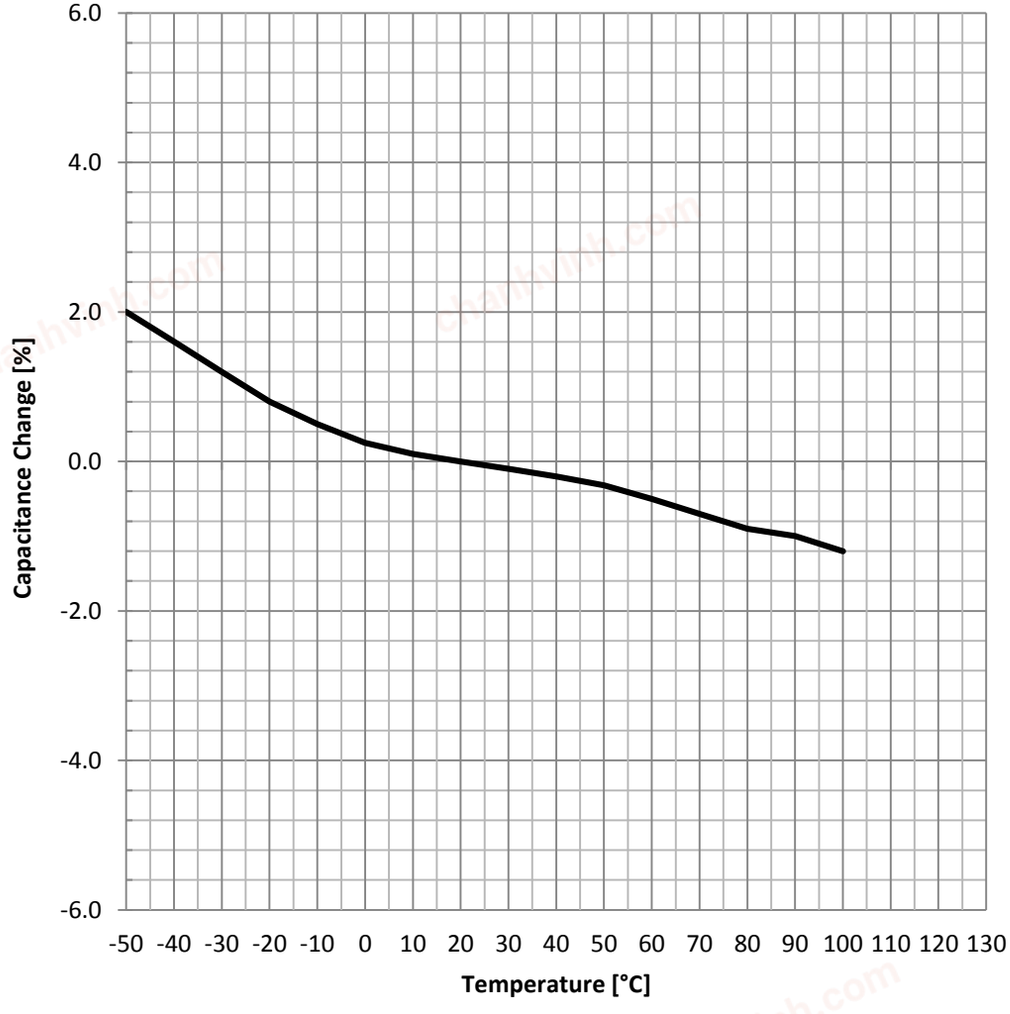

Würth Elektronik eiSos GmbH & Co. KG
EMC & Inductive Solutions

Max-Eyth-Str. 1
74638 Waldenburg
Germany
Tel. +49 (0) 79 42 945 - 0

www.we-online.com
eiSos@we-online.com

CREATED	CHECKED	GENERAL TOLERANCE	PROJECTION METHOD
KaS	PSL	DIN ISO 2768-1m	

DESCRIPTION: **WCAP-FTXX Film Capacitors**

TECHNICAL REFERENCE: MXXP225334K310ACPP45004

ORDER CODE: **890334026007CS**

SIZE	REVISION	STATUS	DATE (YYYY-MM-DD)	BUSINESS UNIT	PAGE
Pitch 22.5	002.000	Valid	2018-01-01	eiCap	4/8

This electronic component has been designed and developed for usage in general electronic equipment only. This product is not authorized for use in equipment where a higher safety standard and reliability standard is especially required or where a failure of the product is reasonably expected to cause severe personal injury or death, unless the parties have executed an agreement specifically governing such use. Moreover Würth Elektronik eiSos GmbH & Co KG products are neither designed nor intended for use in areas such as military, aerospace, aviation, nuclear control, submarine, transportation (automotive control, train control, ship control), transportation signal, disaster prevention, medical, public information network etc.. Würth Elektronik eiSos GmbH & Co KG must be informed about the intent of such usage before the design-in stage. In addition, sufficient reliability evaluation checks for safety must be performed on every electronic component which is used in electrical circuits that require high safety and reliability functions or performance.

chanhvinh.com

Packaging Specification - Carton: [mm]

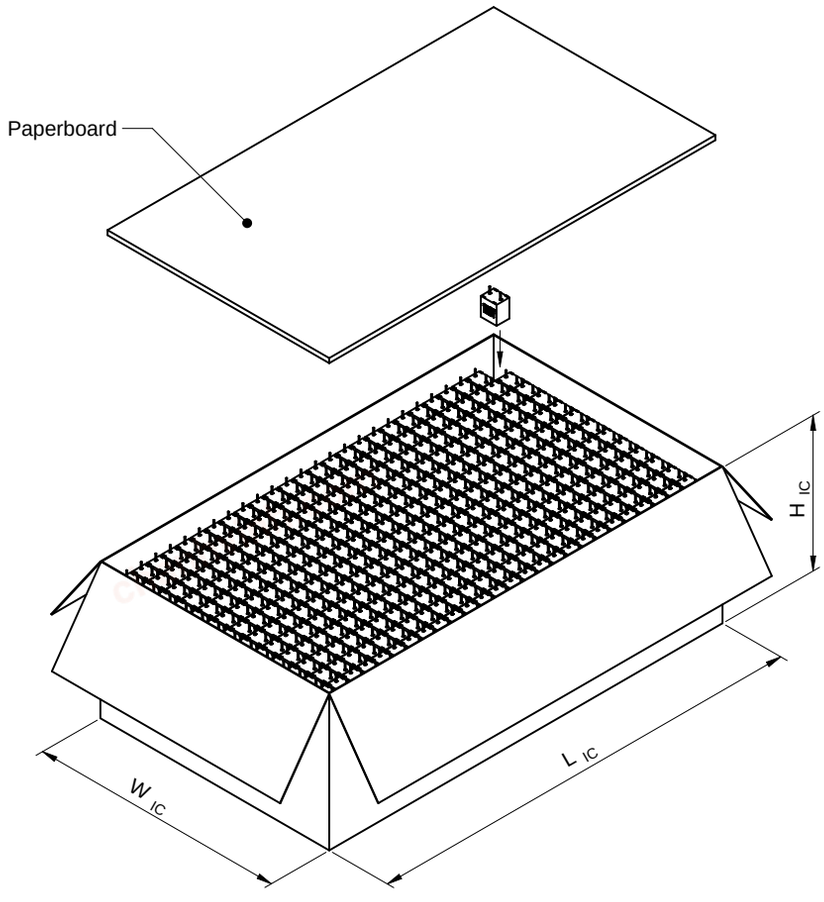

L_{IC} (mm)	W_{IC} (mm)	H_{IC} (mm)	No. of Paperboard	No. of Layer	Packaging Unit	Material
typ.	typ.	typ.	pcs.	pcs.	pcs.	
275,00	160,00	95,00	5	4	960	Paper

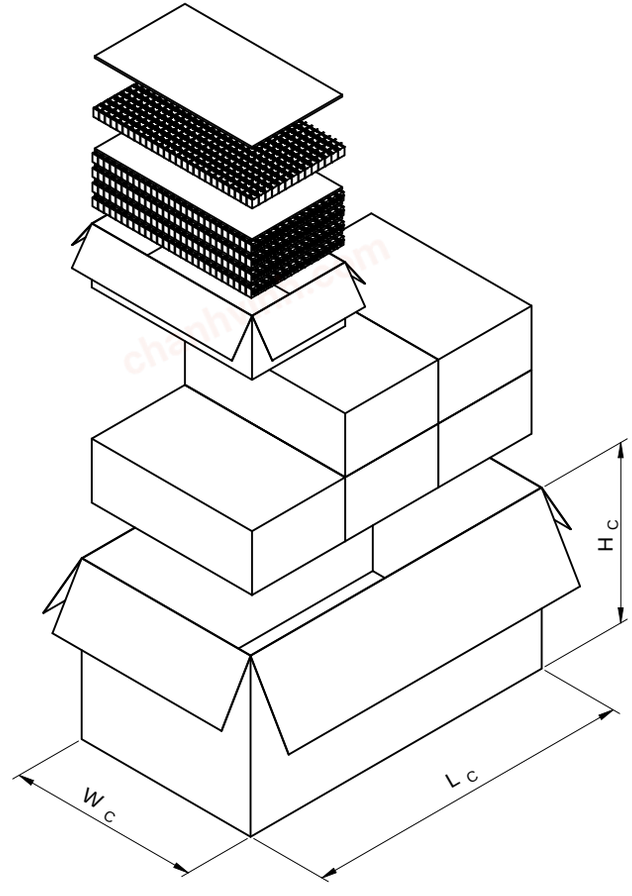

L_C (mm)	W_C (mm)	H_C (mm)	No. of inner Carton	Packaging Unit	Material
typ.	typ.	typ.	pcs.	pcs.	
500,00	290,00	240,00	6	5760	Paper

Würth Elektronik eiSos GmbH & Co. KG
EMC & Inductive Solutions

Max-Eyth-Str. 1
74638 Waldenburg
Germany
Tel. +49 (0) 79 42 945 - 0

www.we-online.com
eiSos@we-online.com

CREATED	CHECKED	GENERAL TOLERANCE	PROJECTION METHOD
KaS	PSL	DIN ISO 2768-1m	

DESCRIPTION: **WCAP-FTXX Film Capacitors**

TECHNICAL REFERENCE: MXXP225334K310ACPP45004

ORDER CODE: **890334026007CS**

SIZE	REVISION	STATUS	DATE (YYYY-MM-DD)	BUSINESS UNIT	PAGE
Pitch 22.5	002.000	Valid	2018-01-01	eiCap	5/8

This electronic component has been designed and developed for usage in general electronic equipment only. This product is not authorized for use in equipment where a higher safety standard and reliability standard is especially required or where a failure of the product is reasonably expected to cause severe personal injury or death, unless the parties have executed an agreement specifically governing such use. Moreover Würth Elektronik eiSos GmbH & Co KG products are neither designed nor intended for use in areas such as military, aerospace, aviation, nuclear control, submarine, transportation (automotive control, train control, ship control), transportation signal, disaster prevention, medical, public information network etc.. Würth Elektronik eiSos GmbH & Co KG must be informed about the intent of such usage before the design-in stage. In addition, sufficient reliability evaluation checks for safety must be performed on every electronic component which is used in electrical circuits that require high safety and reliability functions or performance.

chanhvinh.com

Classification Wave Soldering Profile:

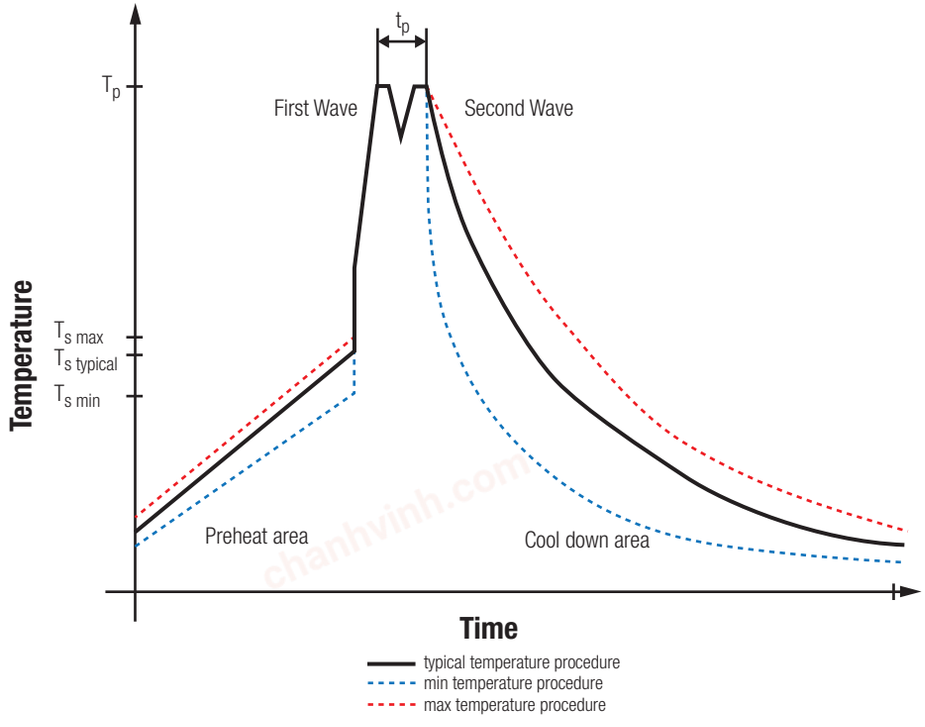

Classification Wave Soldering Profile:

Profile Feature		Pb-Free Assembly	Sn-Pb Assembly
Preheat Temperature Min	$T_{s\ min}$	100 °C	100 °C
Preheat Temperature Typical	$T_{s\ typical}$	120 °C	120 °C
Preheat Temperature Max	$T_{s\ max}$	130 °C	130 °C
Preheat Time t_s from $T_{s\ min}$ to $T_{s\ max}$	t_s	70 seconds	70 seconds
Ramp-up Rate	ΔT	150 °C max.	150 °C max.
Peak Temperature	T_p	250 °C - 260 °C	235 °C - 260 °C
Time of actual peak temperature	t_p	max. 10 seconds max. 5 seconds each wave	max. 10 seconds max. 5 seconds each wave
Ramp-down Rate, Min		~ 2 K/ second	~ 2 K/ second
Ramp-down Rate, Typical		~ 3.5 K/ second	~ 3.5 K/ second
Ramp-down Rate, Max		~ 5 K/ second	~ 5 K/ second
Time 25 °C to 25 °C		4 minutes	4 minutes

refer to EN61760-1:2006

Würth Elektronik eiSos GmbH & Co. KG
EMC & Inductive Solutions

Max-Eyth-Str. 1
74638 Waldenburg
Germany
Tel. +49 (0) 79 42 945 - 0

www.we-online.com
eiSos@we-online.com

WÜRTH ELEKTRONIK

CREATED	CHECKED	GENERAL TOLERANCE	PROJECTION METHOD
KaS	PSL	DIN ISO 2768-1m	

DESCRIPTION: **WCAP-FTXX Film Capacitors**

TECHNICAL REFERENCE: MXXP225334K310ACPP45004

ORDER CODE: **890334026007CS**

SIZE	REVISION	STATUS	DATE (YYYY-MM-DD)	BUSINESS UNIT	PAGE
Pitch 22.5	002.000	Valid	2018-01-01	eiCap	6/8

This electronic component has been designed and developed for usage in general electronic equipment only. This product is not authorized for use in equipment where a higher safety standard and reliability standard is especially required or where a failure of the product is reasonably expected to cause severe personal injury or death, unless the parties have executed an agreement specifically governing such use. Moreover Würth Elektronik eiSos GmbH & Co KG products are neither designed nor intended for use in areas such as military, aerospace, aviation, nuclear control, submarine, transportation (automotive control, train control, ship control), transportation signal, disaster prevention, medical, public information network etc.. Würth Elektronik eiSos GmbH & Co KG must be informed about the intent of such usage before the design-in stage. In addition, sufficient reliability evaluation checks for safety must be performed on every electronic component which is used in electrical circuits that require high safety and reliability functions or performance.

chanhvinh.com

Cautions and Warnings:

The following conditions apply to all goods within the product series of WCAP-FTXX of Würth Elektronik eiSos GmbH & Co. KG:

1. General:

The capacitor is engineered, designed and manufactured to be used within the datasheet specified values. Do not use the capacitor neither short term nor long term outside the specified values, which are given in the data sheet.

2. Product specific:

Follow all instructions mentioned in the data sheet, especially:

- The soldering profile has to be complied with according to the technical reflow soldering specification, otherwise this will void the warranty.
- Wave soldering is only allowed after evaluation and approval.
- Do not exceed the lower and/ or upper specified temperature!
- Do not use the capacitor with other than specified voltage!
- Prevent any kind of mechanical stress to the capacitor terminals!
- Do not use the soldered capacitor on a PCB for any movement or transportation to avoid any tensile force to the capacitor!
- Do not apply any kind of flexural or compressive force onto soldered or unsoldered component!
- Prevent the capacitor surface from any damage or scratches with sharp edges (e.g. chassis, screwdrivers, pincers).
- The capacitor must be placed on a PCB while using the recommended drill hole pattern without changing of the specific lead pitch!
- Avoid any other than specified temperature and / or time conditions during soldering!
- Avoid any overload or conditions that are not specified in the capacitors datasheet!
- Avoid any water or heavy dust on capacitors surface which may cause electrical leakage, damage, overheating or corrosion!
- FTXX is not recommended to be used in ther series to mains application.

3. Storage conditions:

These film capacitors must be stored in stable climatic conditions, which are listed within the general information on front of data sheet.

4. Storage duration:

All products shall be used before the end of the period of 12 months based on the product date code, if not a 100% solderability can´t be ensured.

5. Flammability:

Avoid any external energy or open fire (passive flammability).

6. Vibration resistance:

Do not exceed the vibration limits given by IEC60068-2-6.

7. Cleaning:

Do not use any other cleaning solvents for box-typed capacitors except: ethanol, isopropanol, n-propanol - water mixtures. After cleaning a drying process with temperatures not exceeding 65°C and not longer than 4 hours is mandatory to prevent any kind of electrical damage.

8. Full covered or embedded capacitors in final applications:

If final assemblies will be placed completely in any plastic resin, physical, chemical and thermal influences must be considered. If any specific evaluation or test is necessary please contact the related Würth Elektronik Capacitor Business Division.

Würth Elektronik eiSos GmbH & Co. KG
EMC & Inductive Solutions

Max-Eyth-Str. 1
74638 Waldenburg
Germany
Tel. +49 (0) 79 42 945 - 0

www.we-online.com
eiSos@we-online.com

WÜRTH ELEKTRONIK

CREATED	CHECKED	GENERAL TOLERANCE	PROJECTION METHOD
KaS	PSL	DIN ISO 2768-1m	

DESCRIPTION: **WCAP-FTXX Film Capacitors**

TECHNICAL REFERENCE: MXXP225334K310ACPP45004

ORDER CODE: **890334026007CS**

SIZE	REVISION	STATUS	DATE (YYYY-MM-DD)	BUSINESS UNIT	PAGE
Pitch 22.5	002.000	Valid	2018-01-01	eiCap	7/8

This electronic component has been designed and developed for usage in general electronic equipment only. This product is not authorized for use in equipment where a higher safety standard and reliability standard is especially required or where a failure of the product is reasonably expected to cause severe personal injury or death, unless the parties have executed an agreement specifically governing such use. Moreover Würth Elektronik eiSos GmbH & Co KG products are neither designed nor intended for use in areas such as military, aerospace, aviation, nuclear control, submarine, transportation (automotive control, train control, ship control), transportation signal, disaster prevention, medical, public information network etc.. Würth Elektronik eiSos GmbH & Co KG must be informed about the intent of such usage before the design-in stage. In addition, sufficient reliability evaluation checks for safety must be performed on every electronic component which is used in electrical circuits that require high safety and reliability functions or performance.

chanhvinh.com

Important Notes

The following conditions apply to all goods within the product range of Würth Elektronik eiSos GmbH & Co. KG:

1. General Customer Responsibility

Some goods within the product range of Würth Elektronik eiSos GmbH & Co. KG contain statements regarding general suitability for certain application areas. These statements about suitability are based on our knowledge and experience of typical requirements concerning the areas, serve as general guidance and cannot be estimated as binding statements about the suitability for a customer application. The responsibility for the applicability and use in a particular customer design is always solely within the authority of the customer. Due to this fact it is up to the customer to evaluate, where appropriate to investigate and decide whether the device with the specific product characteristics described in the product specification is valid and suitable for the respective customer application or not.

2. Customer Responsibility related to Specific, in particular Safety-Relevant Applications

It has to be clearly pointed out that the possibility of a malfunction of electronic components or failure before the end of the usual lifetime cannot be completely eliminated in the current state of the art, even if the products are operated within the range of the specifications. In certain customer applications requiring a very high level of safety and especially in customer applications in which the malfunction or failure of an electronic component could endanger human life or health it must be ensured by most advanced technological aid of suitable design of the customer application that no injury or damage is caused to third parties in the event of malfunction or failure of an electronic component. Therefore, customer is cautioned to verify that data sheets are current before placing orders. The current data sheets can be downloaded at www.we-online.com.

3. Best Care and Attention

Any product-specific notes, cautions and warnings must be strictly observed. Any disregard will result in the loss of warranty.

4. Customer Support for Product Specifications

Some products within the product range may contain substances which are subject to restrictions in certain jurisdictions in order to serve specific technical requirements. Necessary information is available on request. In this case the field sales engineer or the internal sales person in charge should be contacted who will be happy to support in this matter.

5. Product R&D

Due to constant product improvement product specifications may change from time to time. As a standard reporting procedure of the Product Change Notification (PCN) according to the JEDEC-Standard inform about minor and major changes. In case of further queries regarding the PCN, the field sales engineer or the internal sales person in charge should be contacted. The basic responsibility of the customer as per Section 1 and 2 remains unaffected.

6. Product Life Cycle

Due to technical progress and economical evaluation we also reserve the right to discontinue production and delivery of products. As a standard reporting procedure of the Product Termination Notification (PTN) according to the JEDEC-Standard we will inform at an early stage about inevitable product discontinuance. According to this we cannot guarantee that all products within our product range will always be available. Therefore it needs to be verified with the field sales engineer or the internal sales person in charge about the current product availability expectancy before or when the product for application design-in disposal is considered. The approach named above does not apply in the case of individual agreements deviating from the foregoing for customer-specific products.

7. Property Rights

All the rights for contractual products produced by Würth Elektronik eiSos GmbH & Co. KG on the basis of ideas, development contracts as well as models or templates that are subject to copyright, patent or commercial protection supplied to the customer will remain with Würth Elektronik eiSos GmbH & Co. KG. Würth Elektronik eiSos GmbH & Co. KG does not warrant or represent that any license, either expressed or implied, is granted under any patent right, copyright, mask work right, or other intellectual property right relating to any combination, application, or process in which Würth Elektronik eiSos GmbH & Co. KG components or services are used.

8. General Terms and Conditions

Unless otherwise agreed in individual contracts, all orders are subject to the current version of the “General Terms and Conditions of Würth Elektronik eiSos Group”, last version available at www.we-online.com.

Würth Elektronik eiSos GmbH & Co. KG
EMC & Inductive Solutions

Max-Eyth-Str. 1
74638 Waldenburg
Germany
Tel. +49 (0) 79 42 945 - 0

www.we-online.com
eiSos@we-online.com

WÜRTH ELEKTRONIK

CREATED	CHECKED	GENERAL TOLERANCE	PROJECTION METHOD
KaS	PSL	DIN ISO 2768-1m	

DESCRIPTION: **WCAP-FTXX Film Capacitors**

TECHNICAL REFERENCE: MXXP225334K310ACPP45004

ORDER CODE: **890334026007CS**

SIZE	REVISION	STATUS	DATE (YYYY-MM-DD)	BUSINESS UNIT	PAGE
Pitch 22.5	002.000	Valid	2018-01-01	eiCap	8/8

This electronic component has been designed and developed for usage in general electronic equipment only. This product is not authorized for use in equipment where a higher safety standard and reliability standard is especially required or where a failure of the product is reasonably expected to cause severe personal injury or death, unless the parties have executed an agreement specifically governing such use. Moreover Würth Elektronik eiSos GmbH & Co KG products are neither designed nor intended for use in areas such as military, aerospace, aviation, nuclear control, submarine, transportation (automotive control, train control, ship control), transportation signal, disaster prevention, medical, public information network etc.. Würth Elektronik eiSos GmbH & Co KG must be informed about the intent of such usage before the design-in stage. In addition, sufficient reliability evaluation checks for safety must be performed on every electronic component which is used in electrical circuits that require high safety and reliability functions or performance.