chanhvinh.com

## Dimensions: [mm]

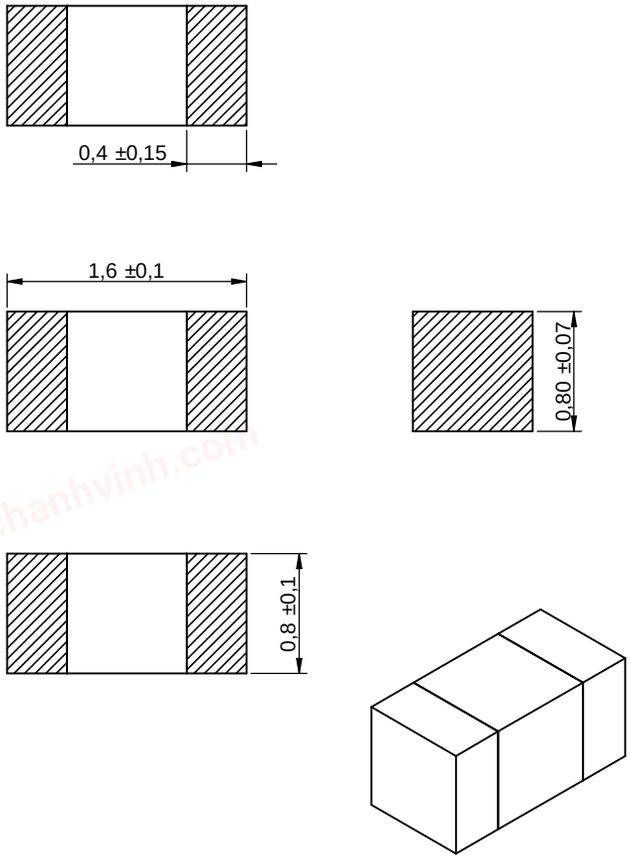


## Recommended Land Pattern: [mm]

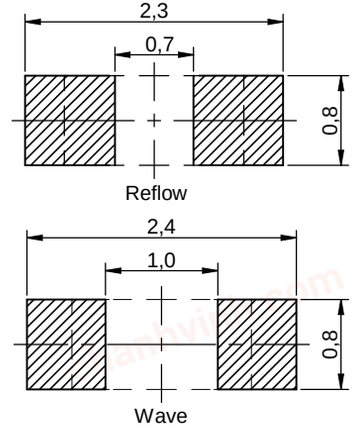


## Schematic:

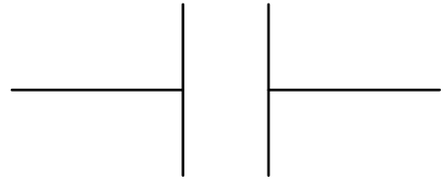

## Electrical Properties:

| Properties | | Test conditions | Value | Unit | Tol. |
|---|---|---|---|---|---|
| **Capacitance** | C | 1 ±0.2 $V_{RMS}$, 1 MHz ±10% @25 °C | 4.7 | pF | ±0.5pF |
| **Rated Voltage** | $V_R$ | | 25 | V (DC) | max. |
| **Q-Factor** | Q | 1 ±0.2 $V_{RMS}$, 1 MHz ±10% @25 °C | 494 | | min. |
| **Insulation Resistance** | $R_{ISO}$ | Apply $V_R$ for 120 s max. | 10 | GΩ | min. |

Precondition for Class II MLCC measurement: Apply a preheat treatment @150 ±10 °C for 1 hour. The measurement should be applied after 24 ±2 hrs the part was stored under ambient conditions. There is not any precondition necessary for Class I MLCC.

## General Information:

| General Purpose MLCC | |
|---|---|
| **Ceramic Type** | NP0 Class I |
| **Temperature Coefficient** | ± 30 ppm/ °C max. |
| **Operating Temperature** | -55 up to +125 °C |
| **Storage Conditions (in original packaging)** | 5 °C up to + 35 °C; 10 % up to 75 % RH |
| **Moisture Sensitivity Level (MSL)** | 1 |
| **Dielectric Strength** | 5 sec. @250 % $V_R$; Charge & Discharge Current <50 mA |
| Test conditions of Electrical Properties: +20 °C, 35 % RH if not specified differently | |
| FIT according to separate documentation | |

RoHS COMPLIANT · REACh COMPLIANT · HALOGEN FREE

Würth Elektronik eiSos GmbH & Co. KG
EMC & Inductive Solutions
Max-Eyth-Str. 1
74638 Waldenburg
Germany
Tel. +49 (0) 79 42 945 - 0
www.we-online.com
eiSos@we-online.com

| CHECKED | REVISION | DATE (YYYY-MM-DD) | GENERAL TOLERANCE | PROJECTION METHOD |
|---|---|---|---|---|
| PSL | 002.000 | 2021-01-03 | DIN ISO 2768-1m | |

DESCRIPTION: **WCAP-CSGP Ceramic Capacitors 0603**

TECHNICAL REFERENCE: NP006034R7D025DFCT10000

ORDER CODE: **885012006030**

| SIZE/TYPE | BUSINESS UNIT | STATUS | PAGE |
|---|---|---|---|
| 0603 | eiCap | Valid | 1/9 |

This electronic component has been designed and developed for usage in general electronic equipment only. This product is not authorized for use in equipment where a higher safety standard and reliability standard is especially required or where a failure of the product is reasonably expected to cause severe personal injury or death, unless the parties have executed an agreement specifically governing such use. Moreover Würth Elektronik eiSos GmbH & Co KG products are neither designed nor intended for use in areas such as military, aerospace, aviation, nuclear control, submarine, transportation (automotive control, train control, ship control), transportation signal, disaster prevention, medical, public information network etc.. Würth Elektronik eiSos GmbH & Co KG must be informed about the intent of such usage before the design-in stage. In addition, sufficient reliability evaluation checks for safety must be performed on every electronic component which is used in electrical circuits that require high safety and reliability functions or performance.

chanhvinh.com

## Mechanical Properties

| Properties | Definition | |
|---|---|---|
| **Adhesive Strength of Termination** | 0201 | 10 ±1 sec; 2 N |
| | 0402 & 0603 | 10 ±1 sec; 5 N |
| | > 0603 | 10 ±1 sec; 10 N |
| **Vibration Resistance** | | all 3 directions, 2 hours each @ 10 - 55 Hz/ min., amplitude 0.75 mm or 10 g |
| **Resistance to Solder Heat** | Specific | Refer to Soldering Profile |

## Certification:

| | |
|---|---|
| **RoHS Approval** | Compliant [2011/65/EU&2015/863] |
| **REACh Approval** | Conform or declared [(EC)1907/2006] |
| **Halogen Free** | Conform [JEDEC JS709B] |
| **Halogen Free** | Conform [IEC 61249-2-21] |

chanhvinh.com

RoHS COMPLIANT | REACh COMPLIANT | HALOGEN FREE

Würth Elektronik eiSos GmbH & Co. KG
EMC & Inductive Solutions
Max-Eyth-Str. 1
74638 Waldenburg
Germany
Tel. +49 (0) 79 42 945 - 0
www.we-online.com
eiSos@we-online.com

| CHECKED | REVISION | DATE (YYYY-MM-DD) | GENERAL TOLERANCE | PROJECTION METHOD |
|---|---|---|---|---|
| PSL | 002.000 | 2021-01-03 | DIN ISO 2768-1m | |

DESCRIPTION: **WCAP-CSGP Ceramic Capacitors 0603**

TECHNICAL REFERENCE: NP006034R7D025DFCT10000

ORDER CODE: **885012006030**

| SIZE/TYPE | BUSINESS UNIT | STATUS | PAGE |
|---|---|---|---|
| 0603 | eiCap | Valid | 2/9 |

This electronic component has been designed and developed for usage in general electronic equipment only. This product is not authorized for use in equipment where a higher safety standard and reliability standard is especially required or where a failure of the product is reasonably expected to cause severe personal injury or death, unless the parties have executed an agreement specifically governing such use. Moreover Würth Elektronik eiSos GmbH & Co KG products are neither designed nor intended for use in areas such as military, aerospace, aviation, nuclear control, submarine, transportation (automotive control, train control, ship control), transportation signal, disaster prevention, medical, public information network etc.. Würth Elektronik eiSos GmbH & Co KG must be informed about the intent of such usage before the design-in stage. In addition, sufficient reliability evaluation checks for safety must be performed on every electronic component which is used in electrical circuits that require high safety and reliability functions or performance.

chanhvinh.com

## Packaging Specification - Tape: [mm]

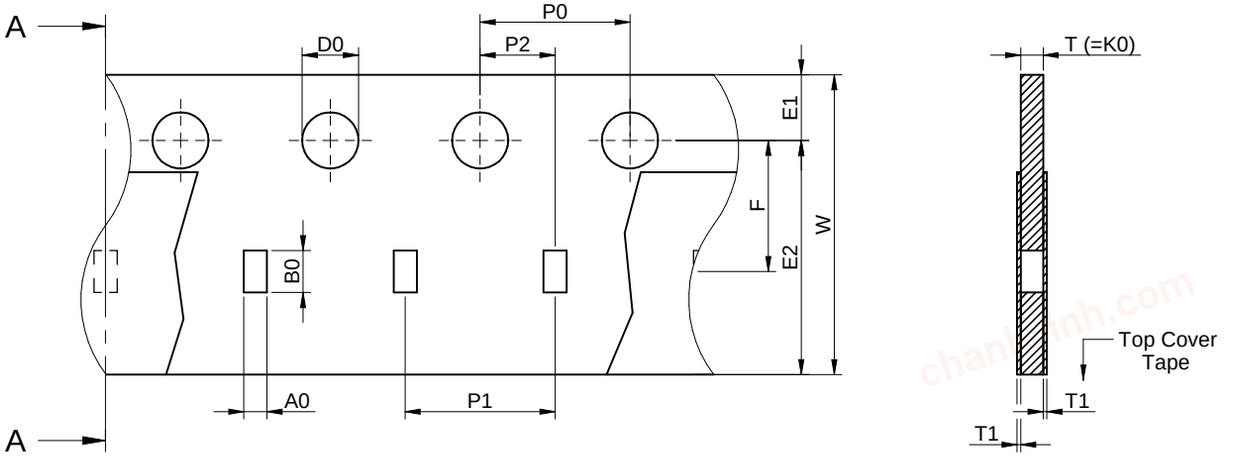


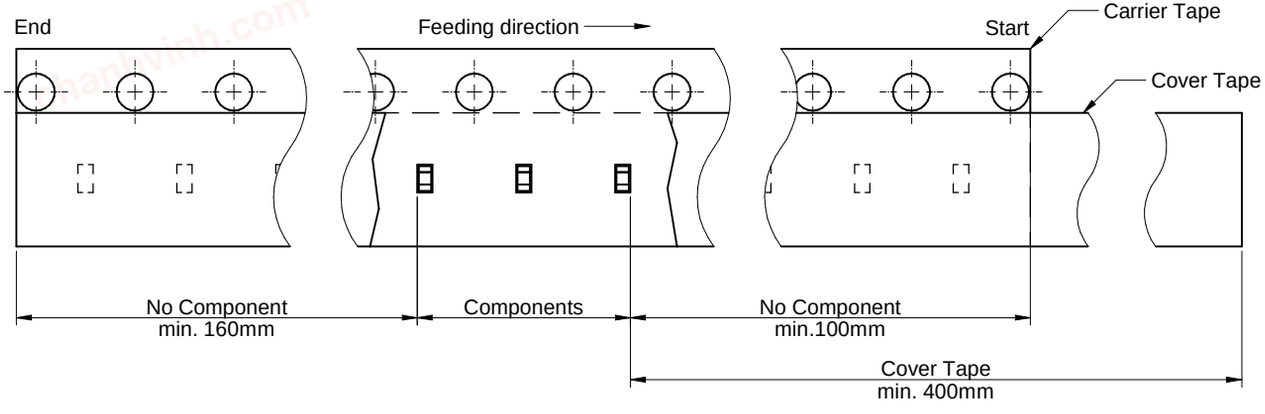


Packaging is referred to the international standard IEC 60286-3:2019

| Tape Type | A0 (mm) | B0 (mm) | W (mm) | T (mm) | T1 (mm) | P0 (mm) | P1 (mm) | P2 (mm) | D0 (mm) | E1 (mm) | E2 (mm) | F (mm) | Material | Qty. (pcs.) |
|---|---|---|---|---|---|---|---|---|---|---|---|---|---|---|
| | typ. | typ. | +0,3/ -0,1 | ref. | ref. | ±0,1 | ±0,1 | +0,05 | +0,1 / -0,0 | ±0,1 | min. | ±0,05 | | |
| 1a | 1,05 | 1,80 | 8,00 | 1,20 | 0,10 | 4,00 | 4,00 | 2,00 | 1,50 | 1,75 | 6,25 | 3,50 | Paper | 4000 |

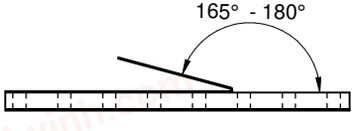


| Tape width | 8 mm | Pull-of force 0,1 N - 1,0 N |
|---|---|---|

## Packaging Specification - Reel: [mm]

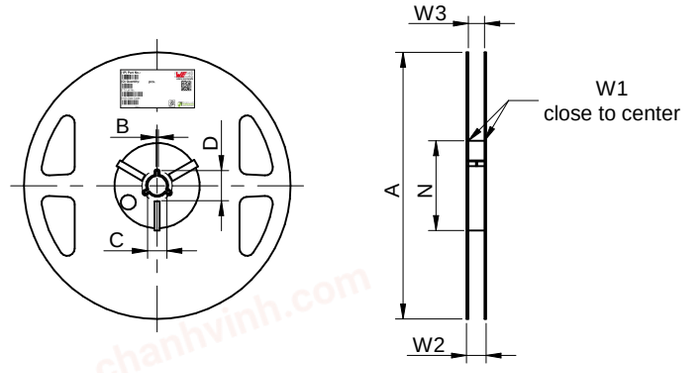


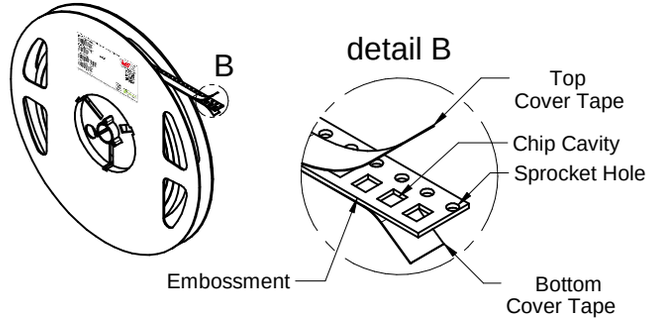


| A (mm) | B (mm) | C (mm) | D (mm) | N (mm) | W1 (mm) | W2 (mm) | W3 (mm) | W3 (mm) | Material |
|---|---|---|---|---|---|---|---|---|---|
| ± 2,0 | min. | min. | min. | min. | +1,5 | max. | min. | max. | |
| 178 | 1.5 | 12.8 | 20.2 | 50 | 8.4 | 14.4 | 7.9 | 10.9 | Polystyrene |

RoHS COMPLIANT · REACh COMPLIANT · HALOGEN FREE

Würth Elektronik eiSos GmbH & Co. KG
EMC & Inductive Solutions
Max-Eyth-Str. 1
74638 Waldenburg
Germany
Tel. +49 (0) 79 42 945 - 0
www.we-online.com
eiSos@we-online.com

| CHECKED | REVISION | DATE (YYYY-MM-DD) | GENERAL TOLERANCE | PROJECTION METHOD |
|---|---|---|---|---|
| PSL | 002.000 | 2021-01-03 | DIN ISO 2768-1m | |

DESCRIPTION: **WCAP-CSGP Ceramic Capacitors 0603**

TECHNICAL REFERENCE: NP006034R7D025DFCT10000

ORDER CODE: **885012006030**

| SIZE/TYPE | BUSINESS UNIT | STATUS | PAGE |
|---|---|---|---|
| 0603 | eiCap | Valid | 3/9 |

This electronic component has been designed and developed for usage in general electronic equipment only. This product is not authorized for use in equipment where a higher safety standard and reliability standard is especially required or where a failure of the product is reasonably expected to cause severe personal injury or death, unless the parties have executed an agreement specifically governing such use. Moreover Würth Elektronik eiSos GmbH & Co KG products are neither designed nor intended for use in areas such as military, aerospace, aviation, nuclear control, submarine, transportation (automotive control, train control, ship control), transportation signal, disaster prevention, medical, public information network etc.. Würth Elektronik eiSos GmbH & Co KG must be informed about the intent of such usage before the design-in stage. In addition, sufficient reliability evaluation checks for safety must be performed on every electronic component which is used in electrical circuits that require high safety and reliability functions or performance.

chanhvinh.com

## Packaging Specification - Inner Carton: [mm]

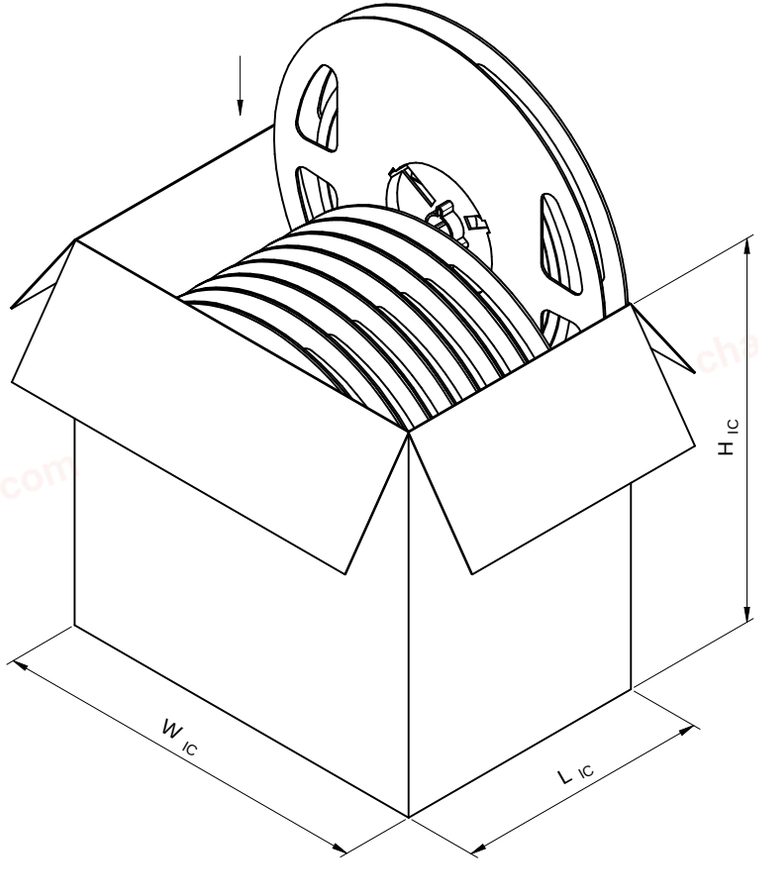


| $L_{IC}$ (mm) | $W_{IC}$ (mm) | $H_{IC}$ (mm) | No. of Reel (pcs.) | Qty. (pcs.) | Material |
|---|---|---|---|---|---|
| typ. | typ. | typ. | | | |
| 120,00 | 180,00 | 180,00 | 10 | 40000 | Paper |

## Packaging Specification - Outer Carton: [mm]

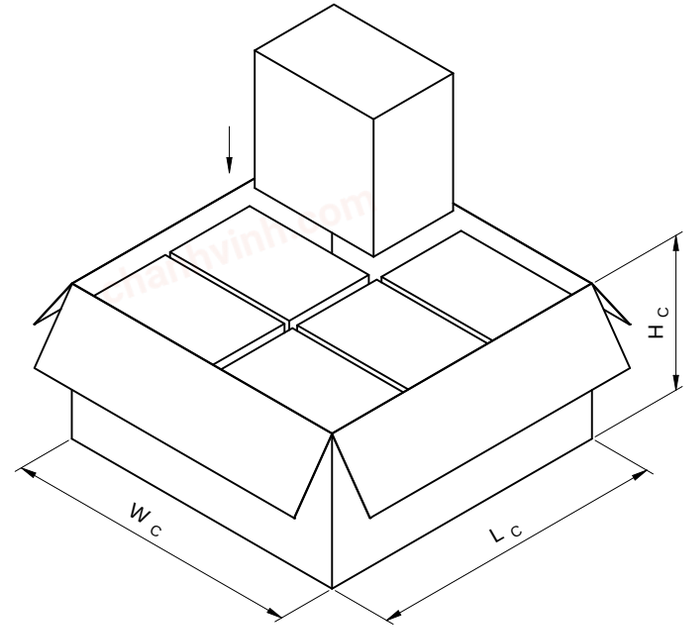


| $L_C$ (mm) | $W_C$ (mm) | $H_C$ (mm) | No. of Inner Carton (pcs.) | Qty. (pcs.) | Material |
|---|---|---|---|---|---|
| typ. | typ. | typ. | | | |
| 393,00 | 393,00 | 203,00 | 6 | 240000 | Paper |

RoHS COMPLIANT | REACh COMPLIANT | HALOGEN FREE

Würth Elektronik eiSos GmbH & Co. KG
EMC & Inductive Solutions
Max-Eyth-Str. 1
74638 Waldenburg
Germany
Tel. +49 (0) 79 42 945 - 0
www.we-online.com
eiSos@we-online.com

| CHECKED | REVISION | DATE (YYYY-MM-DD) | GENERAL TOLERANCE | PROJECTION METHOD |
|---|---|---|---|---|
| PSL | 002.000 | 2021-01-03 | DIN ISO 2768-1m | |

DESCRIPTION: **WCAP-CSGP Ceramic Capacitors 0603**

TECHNICAL REFERENCE: NP006034R7D025DFCT10000

ORDER CODE: **885012006030**

| SIZE/TYPE | BUSINESS UNIT | STATUS | PAGE |
|---|---|---|---|
| 0603 | eiCap | Valid | 4/9 |

This electronic component has been designed and developed for usage in general electronic equipment only. This product is not authorized for use in equipment where a higher safety standard and reliability standard is especially required or where a failure of the product is reasonably expected to cause severe personal injury or death, unless the parties have executed an agreement specifically governing such use. Moreover Würth Elektronik eiSos GmbH & Co KG products are neither designed nor intended for use in areas such as military, aerospace, aviation, nuclear control, submarine, transportation (automotive control, train control, ship control), transportation signal, disaster prevention, medical, public information network etc.. Würth Elektronik eiSos GmbH & Co KG must be informed about the intent of such usage before the design-in stage. In addition, sufficient reliability evaluation checks for safety must be performed on every electronic component which is used in electrical circuits that require high safety and reliability functions or performance.

chanhvinh.com

## Classification Reflow Profile for SMT components:

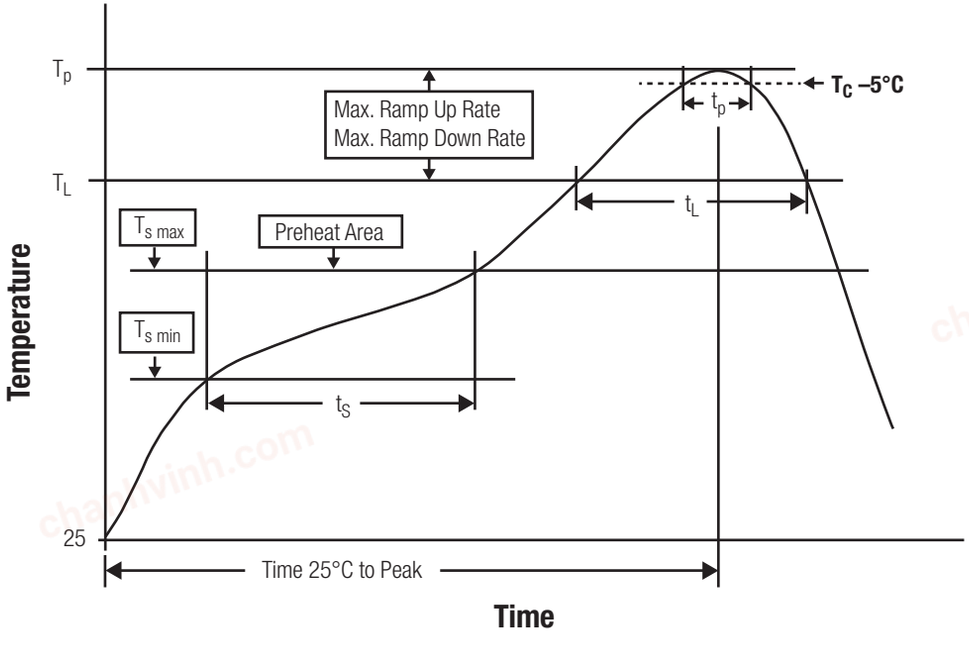


## Classification Reflow Soldering Profile:

| Profile Feature | | Value |
|---|---|---|
| **Preheat Temperature Min** | $T_{s\ min}$ | 150 °C |
| **Preheat Temperature Max** | $T_{s\ max}$ | 200 °C |
| **Preheat Time $t_s$ from $T_{s\ min}$ to $T_{s\ max}$** | $t_s$ | 60 - 120 seconds |
| **Ramp-up Rate ($T_L$ to $T_P$)** | | 3 °C/ second max. |
| **Liquidous Temperature** | $T_L$ | 217 °C |
| **Time $t_L$ maintained above $T_L$** | $t_L$ | 60 - 150 seconds |
| **Peak package body temperature** | $T_p$ | $T_p \leq T_c$, see Table below |
| **Time within 5°C of actual peak temperature** | $t_p$ | 20 - 30 seconds |
| **Ramp-down Rate ($T_P$ to $T_L$)** | | 6 °C/ second max. |
| **Time 25°C to peak temperature** | | 8 minutes max. |

refer to IPC/ JEDEC J-STD-020E

## Package Classification Reflow Temperature ($T_c$):

| Properties | Volume mm³ <350 | Volume mm³ 350-2000 | Volume mm³ >2000 |
|---|---|---|---|
| **PB-Free Assembly I Package Thickness < 1.6 mm** | 260 °C | 260 °C | 260 °C |
| **PB-Free Assembly I Package Thickness 1.6 mm - 2.5 mm** | 260 °C | 250 °C | 245 °C |
| **PB-Free Assembly I Package Thickness > 2.5 mm** | 250 °C | 245 °C | 245 °C |

refer to IPC/ JEDEC J-STD-020E

RoHS COMPLIANT · REACh COMPLIANT · HALOGEN FREE

WÜRTH ELEKTRONIK
Würth Elektronik eiSos GmbH & Co. KG
EMC & Inductive Solutions
Max-Eyth-Str. 1
74638 Waldenburg
Germany
Tel. +49 (0) 79 42 945 - 0
www.we-online.com
eiSos@we-online.com

| CHECKED | REVISION | DATE (YYYY-MM-DD) | GENERAL TOLERANCE | PROJECTION METHOD |
|---|---|---|---|---|
| PSL | 002.000 | 2021-01-03 | DIN ISO 2768-1m | |

DESCRIPTION: **WCAP-CSGP Ceramic Capacitors 0603**

TECHNICAL REFERENCE: NP006034R7D025DFCT10000

ORDER CODE: **885012006030**

| SIZE/TYPE | BUSINESS UNIT | STATUS | PAGE |
|---|---|---|---|
| 0603 | eiCap | Valid | 5/9 |

This electronic component has been designed and developed for usage in general electronic equipment only. This product is not authorized for use in equipment where a higher safety standard and reliability standard is especially required or where a failure of the product is reasonably expected to cause severe personal injury or death, unless the parties have executed an agreement specifically governing such use. Moreover Würth Elektronik eiSos GmbH & Co KG products are neither designed nor intended for use in areas such as military, aerospace, aviation, nuclear control, submarine, transportation (automotive control, train control, ship control), transportation signal, disaster prevention, medical, public information network etc.. Würth Elektronik eiSos GmbH & Co KG must be informed about the intent of such usage before the design-in stage. In addition, sufficient reliability evaluation checks for safety must be performed on every electronic component which is used in electrical circuits that require high safety and reliability functions or performance.

chanhvinh.com

## Classification Wave Soldering Profile:

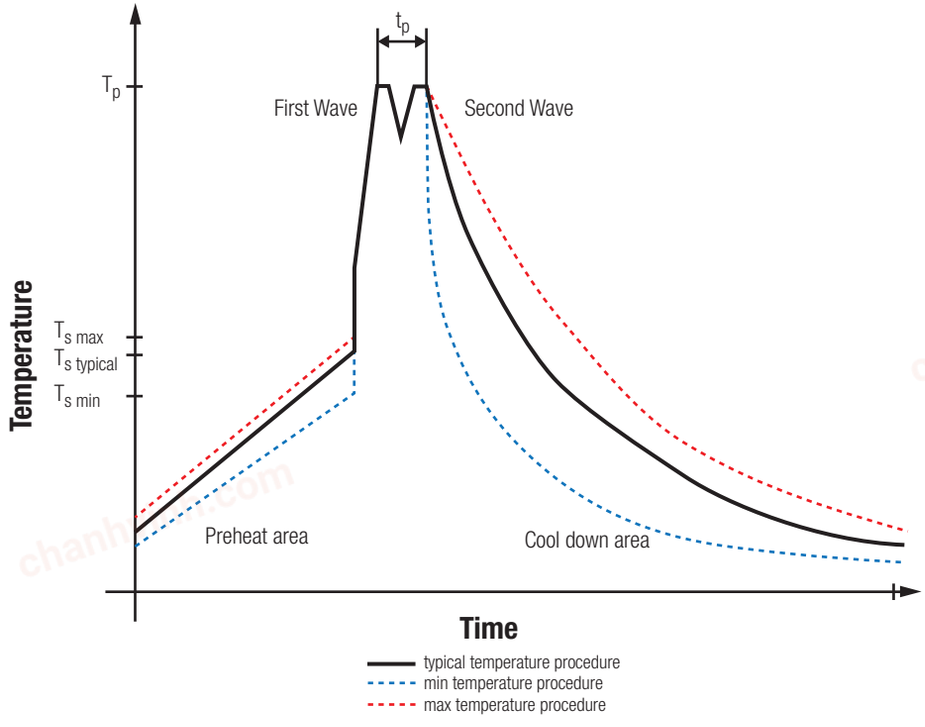


## Classification Wave Soldering Profile:

| Profile Feature | | Pb-Free Assembly | Sn-Pb Assembly |
|---|---|---|---|
| **Preheat Temperature Min** | $T_{s\ min}$ | 100 °C | 100 °C |
| **Preheat Temperature Typical** | $T_{s\ typical}$ | 120 °C | 120 °C |
| **Preheat Temperature Max** | $T_{s\ max}$ | 130 °C | 130 °C |
| **Preheat Time $t_s$ from $T_{s\ min}$ to $T_{s\ max}$** | $t_s$ | 70 seconds | 70 seconds |
| **Ramp-up Rate** | Δ T | 150 °C max. | 150 °C max. |
| **Peak Temperature** | $T_p$ | 250 °C - 260 °C | 235 °C - 260 °C |
| **Time of actual peak temperature** | $t_p$ | max. 10 seconds<br>max. 5 seconds each wave | max. 10 seconds<br>max. 5 seconds each wave |
| **Ramp-down Rate, Min** | | ~ 2 K/ second | ~ 2 K/ second |
| **Ramp-down Rate, Typical** | | ~ 3.5 K/ second | ~ 3.5 K/ second |
| **Ramp-down Rate, Max** | | ~ 5 K/ second | ~ 5 K/ second |
| **Time 25 °C to 25 °C** | | 4 minutes | 4 minutes |

refer to EN61760-1:2006

RoHS COMPLIANT · REACh COMPLIANT · HALOGEN FREE

Würth Elektronik eiSos GmbH & Co. KG
EMC & Inductive Solutions
Max-Eyth-Str. 1
74638 Waldenburg
Germany
Tel. +49 (0) 79 42 945 - 0
www.we-online.com
eiSos@we-online.com

| CHECKED | REVISION | DATE (YYYY-MM-DD) | GENERAL TOLERANCE | PROJECTION METHOD |
|---|---|---|---|---|
| PSL | 002.000 | 2021-01-03 | DIN ISO 2768-1m | |

DESCRIPTION: **WCAP-CSGP Ceramic Capacitors 0603**

TECHNICAL REFERENCE: NP006034R7D025DFCT10000

ORDER CODE: **885012006030**

| SIZE/TYPE | BUSINESS UNIT | STATUS | PAGE |
|---|---|---|---|
| 0603 | eiCap | Valid | 6/9 |

This electronic component has been designed and developed for usage in general electronic equipment only. This product is not authorized for use in equipment where a higher safety standard and reliability standard is especially required or where a failure of the product is reasonably expected to cause severe personal injury or death, unless the parties have executed an agreement specifically governing such use. Moreover Würth Elektronik eiSos GmbH & Co KG products are neither designed nor intended for use in areas such as military, aerospace, aviation, nuclear control, submarine, transportation (automotive control, train control, ship control), transportation signal, disaster prevention, medical, public information network etc.. Würth Elektronik eiSos GmbH & Co KG must be informed about the intent of such usage before the design-in stage. In addition, sufficient reliability evaluation checks for safety must be performed on every electronic component which is used in electrical circuits that require high safety and reliability functions or performance.

chanhvinh.com

# Cautions and Warnings:

## The following conditions apply to all goods within the product series of MLCCs of Würth Elektronik eiSos GmbH & Co. KG:

### General:

- This electronic component is designed and manufactured for use in general electronic equipment.
- Würth Elektronik must be asked for a written approval (following the certain PPAP level procedure) before incorporating the components into any equipment in the field such as military, aerospace, aviation, nuclear control, submarine, transportation (automotive control, train control, ship control), transportation signal, disaster prevention, medical, public information network etc. where higher safety and reliability are especially required and/or if there is the possibility of direct damage or human injury.
- Electronic components that will be used in safety-critical or high-reliability applications, should be pre-evaluated by the customer.
- Direct mechanical impact to the product shall be prevented as material of the body, pins or termination could flake or in the worst case it could break.
- Avoid any water or heavy dust on capacitors surface, which may cause electrical leakage, damage, overheating or corrosion.
- Würth Elektronik products are qualified according to international standards, which are listed in each product reliability report. Würth Elektronik does not warrant any customer qualified product characteristic, beyond Würth Elektronik specifications, for its validity and sustainability over time.
- The responsibility for the applicability of the customer specific products and use in a particular customer design is always within the authority of the customer. All technical specifications for standard products also apply to customer specific products.
- The component is designed and manufactured to be used within the datasheet specified values. If the usage and operation conditions specified in the datasheet are not met, the wire insulation may be damaged or dissolved.
- Do not drop or impact the components, the component may be damaged.
- The capacitance tolerance as specified within the datasheet is only valid on the date of delivery and according specified measurement criteria.

### Product specific:

### Storage conditions:

- A storage of Würth Elektronik products for longer than 12 months is not recommended. Within other effects, the terminals may suffer degradation, resulting in bad solderability. Therefore, all products shall be used within the period of 12 months based on the day of shipment.
- Do not expose the components into direct sunlight.
- The storage condition in the original packaging is defined according to DIN EN 61760-2.
- The environment in which the capacitors are operated and stored has to have atmospheric characteristics and must be free of dew condensation and toxic gases (e.g. chlorine, ammonia, sulfur, hydrogen sulphide and hydrogen sulfate).
- The storage conditions stated in the original packaging apply to the storage time and not to the transportation time of the components.

### Operating climatic conditions:

- Do not exceed the lower nor the upper specified temperature under no circumstances.
- Be aware that the specified capacitance tolerance is only valid at the date of delivery.
- Do not use the capacitors under high humidity, high temperature nor under high or low atmospheric pressure which may affect capacitors reliability.
- Surface temperature including self-heating must be kept below the maximum operating temperature.
- The temperature rise of the capacitor´s temperature compared to ambient temperature shall be below 20°C.

### Operating load conditions:

- Operating voltage across the terminals including AC and DC peaks and AC or pulse overshooting, Vp-p, as well as irregular voltage because of resonance or switching must be below the rated voltage.
- Due to self-heating the reliability of the capacitor may be reduced, if high frequency AC or pulse is applied.
- Consider carefully possible specific changes of electrical characteristics like capacitance over temperature, voltage and time as well as the specific performance over frequency for the actual use conditions.

### Design of the PCB:

- The chip capacitor shall be located to minimize any possible mechanical stress from deflection or board wrap.
- It is recommended to position the chip capacitor in parallel to slits and perforations and as far away from slits, perforations, separation points, screw holes, frames and edges of the PCB to avoid mechanical stress.
- The PCB design (e.g. land pattern design and grounding planes) must be evaluated for each individual circuit to achieve the optimal soldering results.

### Mounting:

- Adjust the bottom dead center of the mounting head not to press on the PCB surface.
- Provide support from the bottom side of the PCB by a support pin for minimizing the impact energy from the mounting head.

### Adhesive:

- The adhesive should have sufficient coating and viscosity and should harden rapidly.
- The adhesive should be strong enough to hold parts on the board during the mounting and solder process and should have sufficient strength at high temperatures.
- The adhesive should have corrosion resistance, excellent insulation characteristics and no emission of toxic gasses nor any effect on the human body.
- Do not use too much adhesive to avoid pollution of the soldering pads.

RoHS COMPLIANT | REACh COMPLIANT | HALOGEN FREE

WÜRTH ELEKTRONIK
Würth Elektronik eiSos GmbH & Co. KG
EMC & Inductive Solutions
Max-Eyth-Str. 1
74638 Waldenburg
Germany
Tel. +49 (0) 79 42 945 - 0
www.we-online.com
eiSos@we-online.com

| CHECKED | REVISION | DATE (YYYY-MM-DD) | GENERAL TOLERANCE | PROJECTION METHOD |
|---|---|---|---|---|
| PSL | 002.000 | 2021-01-03 | DIN ISO 2768-1m | |

DESCRIPTION: **WCAP-CSGP Ceramic Capacitors 0603**

TECHNICAL REFERENCE: NP006034R7D025DFCT10000

ORDER CODE: **885012006030**

| SIZE/TYPE | BUSINESS UNIT | STATUS | PAGE |
|---|---|---|---|
| 0603 | eiCap | Valid | 7/9 |

This electronic component has been designed and developed for usage in general electronic equipment only. This product is not authorized for use in equipment where a higher safety standard and reliability standard is especially required or where a failure of the product is reasonably expected to cause severe personal injury or death, unless the parties have executed an agreement specifically governing such use. Moreover Würth Elektronik eiSos GmbH & Co KG products are neither designed nor intended for use in areas such as military, aerospace, aviation, nuclear control, submarine, transportation (automotive control, train control, ship control), transportation signal, disaster prevention, medical, public information network etc.. Würth Elektronik eiSos GmbH & Co KG must be informed about the intent of such usage before the design-in stage. In addition, sufficient reliability evaluation checks for safety must be performed on every electronic component which is used in electrical circuits that require high safety and reliability functions or performance.

chanhvinh.com

## Soldering:

- The solder profile must comply with the technical product specifications. All other profiles will void the warranty.
- All other soldering methods are at the customer's own risk.
- Strong forces which may affect the coplanarity of the component's electrical connection with the PCB (i.e. pins), can damage the part, resulting in avoid of the warranty.
- Customer needs to ensure that the applied solder paste, the paste thickness and solder conditions are applicable to guarantee a sufficient solder result according to the relevant criteria of IPC-A-610.
- Excessive amount of solder may lead to higher tensile force and chip cracking. Insufficient amount of solder may detach the capacitor due to defective contacts.
- Do not use excessive nor insufficient flux.
- Provide enough washing when water-soluble flux is used.
- For reflow soldering, two times limitation is recommended.
- Wave soldering is recommended only for the following case sizes: 0603 and 0805, with maximal thickness of 0.85 mm.

## Cleaning and Washing:

- Washing agents used during the production to clean the customer's application, might damage or change the characteristics of the wire insulation body, the marking or the plating. Washing agent could have a negative effect on the long term functionality of the product.
- Avoid Halogen in the flux or any contaminated flux as well as excessively high ultrasonic cleaning.

## Coating, molding and potting of the PCB:

- If the product is potted in the costumer's application, the potting material might shrink or expand during and after hardening. Shrinking could lead to an incomplete seal, allowing contaminants into the body and termination. Expansion could damage the body or termination. We recommend a manual inspection after potting to avoid these effects.
- When coating and molding the PCB, verify the quality influence on the capacitor.
- Verify the curing temperature and assure that there is no harmful decomposing or reaction gas emission during curing.
- Do not exceed the maximal temperature rise of 20°C.

## Handling:

- After soldering, please pay attention not to bend, twist or distort the PCB in handling and storage.
- Avoid excessive pressure during the functional check of the PCB.
- Avoid bending stress while breaking the PCB.
- After mounting, avoid piling up PCBs to avoid hitting the chip capacitor of another board.

These cautions and warnings comply with the state of the scientific and technical knowledge and are believed to be accurate and reliable. However, no responsibility is assumed for inaccuracies or incompleteness.



This electronic component has been designed and developed for usage in general electronic equipment only. This product is not authorized for use in equipment where a higher safety standard and reliability standard is especially required or where a failure of the product is reasonably expected to cause severe personal injury or death, unless the parties have executed an agreement specifically governing such use. Moreover Würth Elektronik eiSos GmbH & Co KG products are neither designed nor intended for use in areas such as military, aerospace, aviation, nuclear control, submarine, transportation (automotive control, train control, ship control), transportation signal, disaster prevention, medical, public information network etc.. Würth Elektronik eiSos GmbH & Co KG must be informed about the intent of such usage before the design-in stage. In addition, sufficient reliability evaluation checks for safety must be performed on every electronic component which is used in electrical circuits that require high safety and reliability functions or performance.

chanhvinh.com

# Important Notes

## The following conditions apply to all goods within the product range of Würth Elektronik eiSos GmbH & Co. KG:

### 1. General Customer Responsibility

Some goods within the product range of Würth Elektronik eiSos GmbH & Co. KG contain statements regarding general suitability for certain application areas. These statements about suitability are based on our knowledge and experience of typical requirements concerning the areas, serve as general guidance and cannot be estimated as binding statements about the suitability for a customer application. The responsibility for the applicability and use in a particular customer design is always solely within the authority of the customer. Due to this fact it is up to the customer to evaluate, where appropriate to investigate and decide whether the device with the specific product characteristics described in the product specification is valid and suitable for the respective customer application or not.

### 2. Customer Responsibility related to Specific, in particular Safety-Relevant Applications

It has to be clearly pointed out that the possibility of a malfunction of electronic components or failure before the end of the usual lifetime cannot be completely eliminated in the current state of the art, even if the products are operated within the range of the specifications. In certain customer applications requiring a very high level of safety and especially in customer applications in which the malfunction or failure of an electronic component could endanger human life or health it must be ensured by most advanced technological aid of suitable design of the customer application that no injury or damage is caused to third parties in the event of malfunction or failure of an electronic component. Therefore, customer is cautioned to verify that data sheets are current before placing orders. The current data sheets can be downloaded at www.we-online.com.

### 3. Best Care and Attention

Any product-specific notes, cautions and warnings must be strictly observed. Any disregard will result in the loss of warranty.

### 4. Customer Support for Product Specifications

Some products within the product range may contain substances which are subject to restrictions in certain jurisdictions in order to serve specific technical requirements. Necessary information is available on request. In this case the field sales engineer or the internal sales person in charge should be contacted who will be happy to support in this matter.

### 5. Product R&D

Due to constant product improvement product specifications may change from time to time. As a standard reporting procedure of the Product Change Notification (PCN) according to the JEDEC-Standard inform about minor and major changes. In case of further queries regarding the PCN, the field sales engineer or the internal sales person in charge should be contacted. The basic responsibility of the customer as per Section 1 and 2 remains unaffected.

### 6. Product Life Cycle

Due to technical progress and economical evaluation we also reserve the right to discontinue production and delivery of products. As a standard reporting procedure of the Product Termination Notification (PTN) according to the JEDEC-Standard we will inform at an early stage about inevitable product discontinuance. According to this we cannot guarantee that all products within our product range will always be available. Therefore it needs to be verified with the field sales engineer or the internal sales person in charge about the current product availability expectancy before or when the product for application design-in disposal is considered. The approach named above does not apply in the case of individual agreements deviating from the foregoing for customer-specific products.

### 7. Property Rights

All the rights for contractual products produced by Würth Elektronik eiSos GmbH & Co. KG on the basis of ideas, development contracts as well as models or templates that are subject to copyright, patent or commercial protection supplied to the customer will remain with Würth Elektronik eiSos GmbH & Co. KG. Würth Elektronik eiSos GmbH & Co. KG does not warrant or represent that any license, either expressed or implied, is granted under any patent right, copyright, mask work right, or other intellectual property right relating to any combination, application, or process in which Würth Elektronik eiSos GmbH & Co. KG components or services are used.

### 8. General Terms and Conditions

Unless otherwise agreed in individual contracts, all orders are subject to the current version of the “General Terms and Conditions of Würth Elektronik eiSos Group”, last version available at www.we-online.com.

RoHS COMPLIANT | REACh COMPLIANT | HALOGEN FREE

WÜRTH ELEKTRONIK

Würth Elektronik eiSos GmbH & Co. KG
EMC & Inductive Solutions
Max-Eyth-Str. 1
74638 Waldenburg
Germany
Tel. +49 (0) 79 42 945 - 0
www.we-online.com
eiSos@we-online.com

| CHECKED | REVISION | DATE (YYYY-MM-DD) | GENERAL TOLERANCE | PROJECTION METHOD |
|---|---|---|---|---|
| PSL | 002.000 | 2021-01-03 | DIN ISO 2768-1m | |

DESCRIPTION: **WCAP-CSGP Ceramic Capacitors 0603**

TECHNICAL REFERENCE: NP006034R7D025DFCT10000

ORDER CODE: **885012006030**

| SIZE/TYPE | BUSINESS UNIT | STATUS | PAGE |
|---|---|---|---|
| 0603 | eiCap | Valid | 9/9 |

This electronic component has been designed and developed for usage in general electronic equipment only. This product is not authorized for use in equipment where a higher safety standard and reliability standard is especially required or where a failure of the product is reasonably expected to cause severe personal injury or death, unless the parties have executed an agreement specifically governing such use. Moreover Würth Elektronik eiSos GmbH & Co KG products are neither designed nor intended for use in areas such as military, aerospace, aviation, nuclear control, submarine, transportation (automotive control, train control, ship control), transportation signal, disaster prevention, medical, public information network etc.. Würth Elektronik eiSos GmbH & Co KG must be informed about the intent of such usage before the design-in stage. In addition, sufficient reliability evaluation checks for safety must be performed on every electronic component which is used in electrical circuits that require high safety and reliability functions or performance.