chanhvinh.com

Dimensions: [mm]

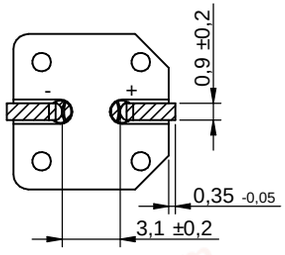

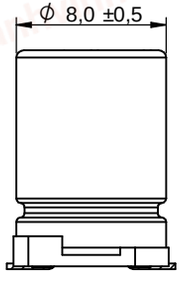

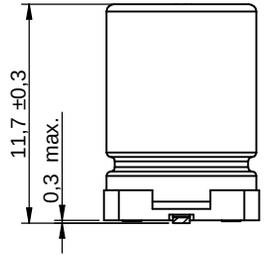

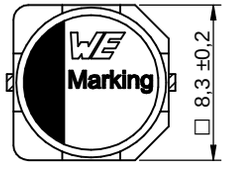

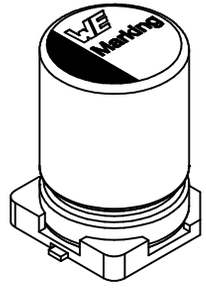

Recommended Land Pattern: [mm]

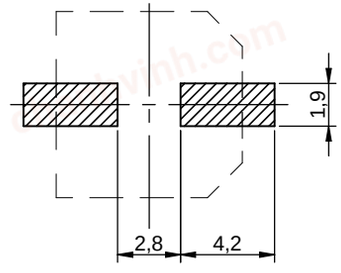

Schematic:

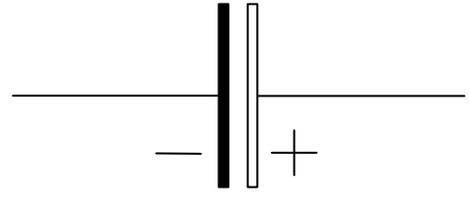

Electrical Properties:

Properties		Test conditions	Value	Unit	Tol.
Capacitance	C	0.25 V/ 120 Hz/ +20 °C	68	µF	±20%
Rated Voltage	V_R		35	V (DC)	max.
Surge Voltage	V_S	1000 cycles @ 20 °C	40.2	V (DC)	max.
Leakage Current	I_{Leak}	2 min./ +20 °C	476	µA	max.
Dissipation Factor	DF	0.25 V/ 120 Hz/ +20 °C	12	%	max.
Ripple Current	I_{RIPPLE}	100 kHz @ 105 °C	3300	mA	max.
ESR	R_{ESR}	0.25 V/ 100 kHz/ +20 °C	28	mΩ	max.

General Information:

Aluminum Polymer Capacitors	
Operating Temperature	-55 up to +105 °C
Storage Conditions (in original packaging)	5 °C up to + 35 °C; 10 % up to 75 % RH
Endurance	2000 h
Moisture Sensitivity Level (MSL)	1
Test conditions of electrical properties: +20 °C, 35 % RH if not specified differently	
FIT according to separate documentation	
Surge Voltage: charging time 30 s, discharging time 330 s for a cycle	

RoHS COMPLIANT · REACh COMPLIANT · HALOGEN FREE

WÜRTH ELEKTRONIK MORE THAN YOU EXPECT

Würth Elektronik eiSos GmbH & Co. KG
EMC & Inductive Solutions
Max-Eyth-Str. 1
74638 Waldenburg
Germany
Tel. +49 (0) 79 42 945 - 0
www.we-online.com
eiSos@we-online.com

CHECKED	REVISION	DATE (YYYY-MM-DD)	GENERAL TOLERANCE	PROJECTION METHOD
FPu	002.000	2022-09-14	DIN ISO 2768-1m	

DESCRIPTION: **WCAP-PSLC Aluminum Polymer Capacitors**

TECHNICAL REFERENCE: PSEE117680M035DVCTFB000

ORDER CODE: **875075655002**

SIZE/TYPE	BUSINESS UNIT	STATUS	PAGE
8.0 x 11.7	eiCap	Valid	1/9

This electronic component has been designed and developed for usage in general electronic equipment only. This product is not authorized for use in equipment where a higher safety standard and reliability standard is especially required or where a failure of the product is reasonably expected to cause severe personal injury or death, unless the parties have executed an agreement specifically governing such use. Moreover Würth Elektronik eiSos GmbH & Co KG products are neither designed nor intended for use in areas such as military, aerospace, aviation, nuclear control, submarine, transportation (automotive control, train control, ship control), transportation signal, disaster prevention, medical, public information network etc.. Würth Elektronik eiSos GmbH & Co KG must be informed about the intent of such usage before the design-in stage. In addition, sufficient reliability evaluation checks for safety must be performed on every electronic component which is used in electrical circuits that require high safety and reliability functions or performance.

chanhvinh.com

Component Marking:

1st Line	Capacitance Value: 68 µF (Coding: 680)
2nd Line	WCAP-PSLC & datecode: YWW
3rd Line	Rated Voltage:35 V(DC)

Multiplier for Ripple Current vs. Frequency

Frequency	120 Hz ≤ freq. < 1 kHz	1 kHz ≤ freq. < 10 kHz	10 kHz ≤ freq. < 100 kHz	100 kHz ≤ freq. < 300 kHz
Muliplier	0.05	0.3	0.7	1.0

Lifetime Performance:

Test Conditions	Endurance	Moisture Resistance
Lifetime	2000 h @ 105 °C	1000 h, stored @ 60 °C , RH 90~95 %
Voltage	$U_{R\ applied}$	None
Current	None	None
Δ C	≤ ±20 % of initial measured value	≤ ±20 % of initial measured value
ESR	≤ 150 % of the initial specified value	≤ 150 % of the initial specified value
DF	≤ 150 % of the initial specified value	≤ 150 % of the initial specified value
Leakage Current	≤ the initial specified value	≤ the initial specified value

Certification:

RoHS Approval	Compliant [2011/65/EU&2015/863]
REACh Approval	Conform or declared [(EC)1907/2006]
Halogen Free	Conform [JEDEC JS709B]
Halogen Free	Conform [IEC 61249-2-21]

RoHS COMPLIANT · REACh COMPLIANT · HALOGEN FREE

WÜRTH ELEKTRONIK MORE THAN YOU EXPECT

Würth Elektronik eiSos GmbH & Co. KG
EMC & Inductive Solutions
Max-Eyth-Str. 1
74638 Waldenburg
Germany
Tel. +49 (0) 79 42 945 - 0
www.we-online.com
eiSos@we-online.com

CHECKED	REVISION	DATE (YYYY-MM-DD)	GENERAL TOLERANCE	PROJECTION METHOD
FPu	002.000	2022-09-14	DIN ISO 2768-1m	

DESCRIPTION: **WCAP-PSLC Aluminum Polymer Capacitors**

TECHNICAL REFERENCE: PSEE117680M035DVCTFB000

ORDER CODE: **875075655002**

SIZE/TYPE	BUSINESS UNIT	STATUS	PAGE
8.0 x 11.7	eiCap	Valid	2/9

This electronic component has been designed and developed for usage in general electronic equipment only. This product is not authorized for use in equipment where a higher safety standard and reliability standard is especially required or where a failure of the product is reasonably expected to cause severe personal injury or death, unless the parties have executed an agreement specifically governing such use. Moreover Würth Elektronik eiSos GmbH & Co KG products are neither designed nor intended for use in areas such as military, aerospace, aviation, nuclear control, submarine, transportation (automotive control, train control, ship control), transportation signal, disaster prevention, medical, public information network etc.. Würth Elektronik eiSos GmbH & Co KG must be informed about the intent of such usage before the design-in stage. In addition, sufficient reliability evaluation checks for safety must be performed on every electronic component which is used in electrical circuits that require high safety and reliability functions or performance.

chanhvinh.com

Packaging Specification - Tape: [mm]

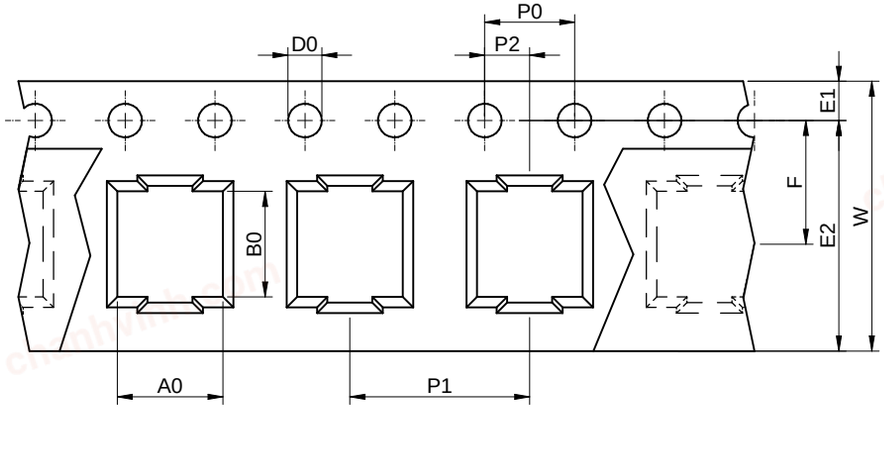

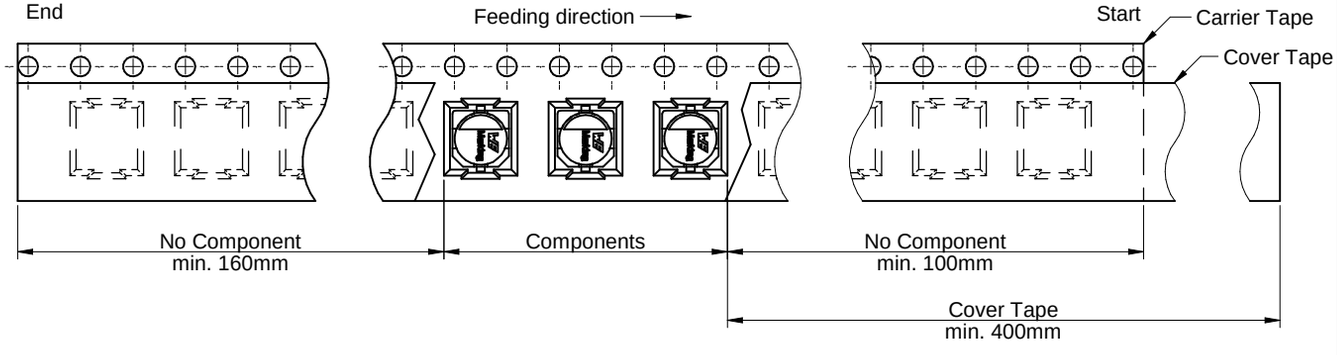

	Tape Type	A0 (mm)	B0 (mm)	W (mm)	T (mm)	T1 (mm)	T2 (mm)	K0 (mm)	P0 (mm)	P1 (mm)	P2 (mm)	D0 (mm)	E1 (mm)	E2 (mm)	F (mm)	Material	Qty. (pcs.)
Tolerance		±0,2	±0,2	±0,3	±0,05	max.	±0,2	typ.	±0,1	±0,1	±0,05	±0,1	±0,1	min.	±0,1		
Value	2a	8,70	8,70	24,00	0,40	0,10	13,00	12,84	4,00	16,00	2,00	1,50	1,75	22,25	11,50	Polystyrene	400

Packaging Specification - Reel: [mm]

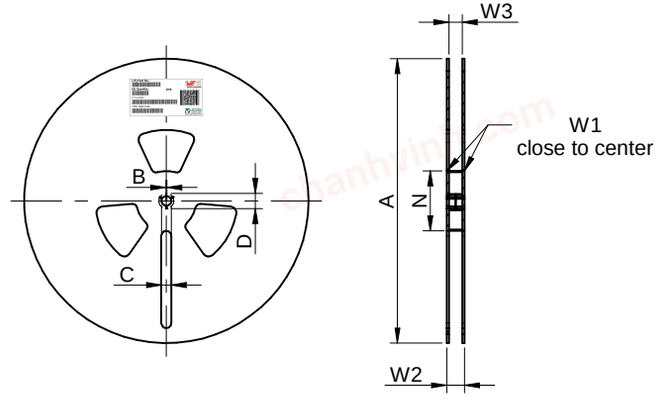

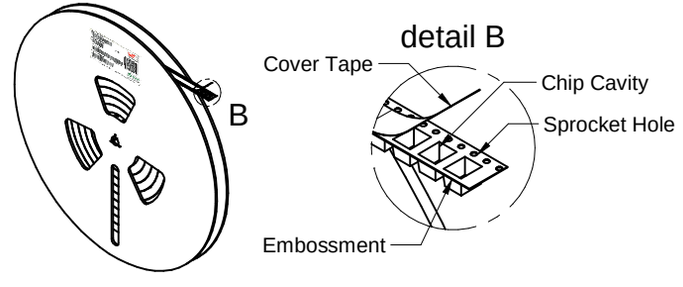

	A (mm)	B (mm)	C (mm)	D (mm)	N (mm)	W1 (mm)	W2 (mm)	W3 (mm)	Material
Tolerance	± 2,0	± 0,5	± 0,5	± 0,8	min.	± 1,0	± 1,0	± 1,0	
Value	380	2	15	21	80	26	32	26	Paper

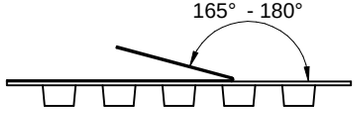

	Pull-off force
Tape width	24 mm
	0,1 N - 1,3 N

RoHS COMPLIANT | REACh COMPLIANT | HALOGEN FREE

WÜRTH ELEKTRONIK MORE THAN YOU EXPECT

Würth Elektronik eiSos GmbH & Co. KG
EMC & Inductive Solutions
Max-Eyth-Str. 1
74638 Waldenburg
Germany
Tel. +49 (0) 79 42 945 - 0
www.we-online.com
eiSos@we-online.com

CHECKED	REVISION	DATE (YYYY-MM-DD)	GENERAL TOLERANCE	PROJECTION METHOD
FPu	002.000	2022-09-14	DIN ISO 2768-1m	

DESCRIPTION: **WCAP-PSLC Aluminum Polymer Capacitors**

TECHNICAL REFERENCE: PSEE117680M035DVCTFB000

ORDER CODE: **875075655002**

SIZE/TYPE	BUSINESS UNIT	STATUS	PAGE
8.0 x 11.7	eiCap	Valid	3/9

This electronic component has been designed and developed for usage in general electronic equipment only. This product is not authorized for use in equipment where a higher safety standard and reliability standard is especially required or where a failure of the product is reasonably expected to cause severe personal injury or death, unless the parties have executed an agreement specifically governing such use. Moreover Würth Elektronik eiSos GmbH & Co KG products are neither designed nor intended for use in areas such as military, aerospace, aviation, nuclear control, submarine, transportation (automotive control, train control, ship control), transportation signal, disaster prevention, medical, public information network etc.. Würth Elektronik eiSos GmbH & Co KG must be informed about the intent of such usage before the design-in stage. In addition, sufficient reliability evaluation checks for safety must be performed on every electronic component which is used in electrical circuits that require high safety and reliability functions or performance.

chanhvinh.com

Packaging Specification - Inner Carton: [mm]

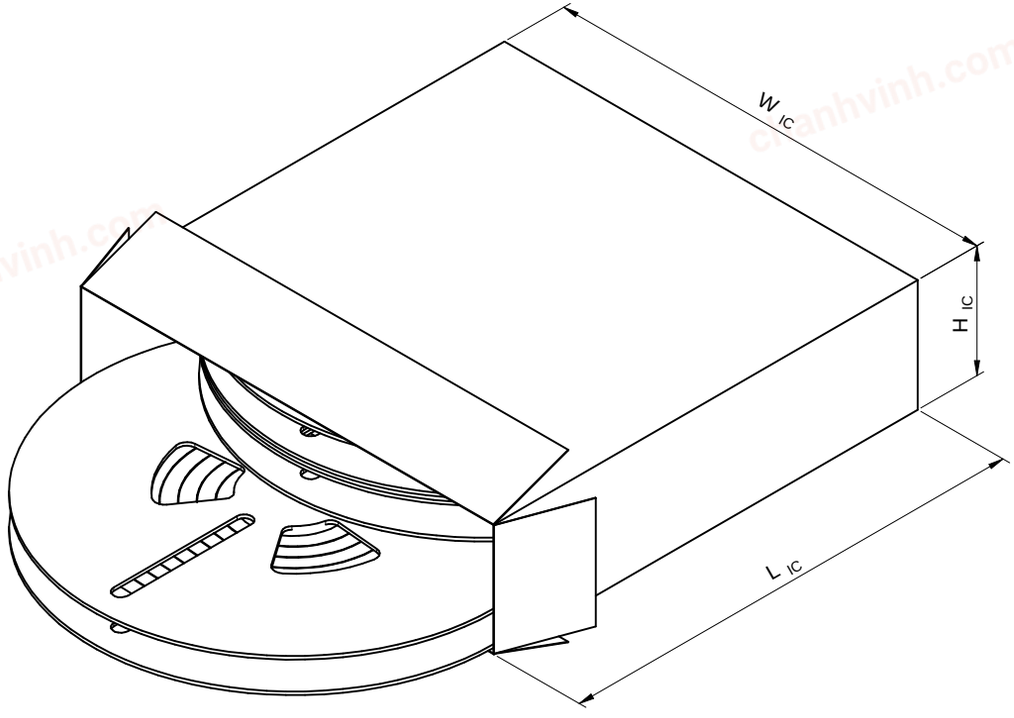

	L_{IC} (mm)	W_{IC} (mm)	H_{IC} (mm)	No. of Reel (pcs.)	Qty. (pcs.)	Material
Tolerance	typ.	typ.	typ.			
Value	400,00	390,00	106,00	3	1200	Paper

Packaging Specification - Outer Carton: [mm]

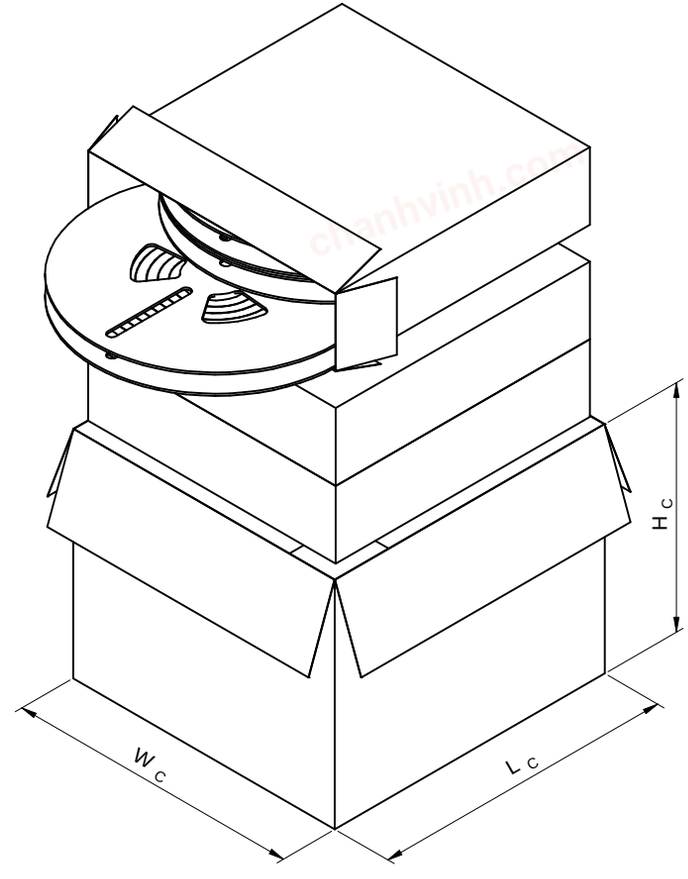

	L_C (mm)	W_C (mm)	H_C (mm)	No. of Inner Carton (pcs.)	Qty. (pcs.)	Material
Tolerance	typ.	typ.	typ.			
Value	425,00	412,00	340,00	3	3600	Paper

RoHS COMPLIANT | REACh COMPLIANT | HALOGEN FREE

WÜRTH ELEKTRONIK MORE THAN YOU EXPECT

Würth Elektronik eiSos GmbH & Co. KG
EMC & Inductive Solutions
Max-Eyth-Str. 1
74638 Waldenburg
Germany
Tel. +49 (0) 79 42 945 - 0
www.we-online.com
eiSos@we-online.com

CHECKED	REVISION	DATE (YYYY-MM-DD)	GENERAL TOLERANCE	PROJECTION METHOD
FPu	002.000	2022-09-14	DIN ISO 2768-1m	

DESCRIPTION
WCAP-PSLC Aluminum Polymer Capacitors

TECHNICAL REFERENCE
PSEE117680M035DVCTFB000

ORDER CODE
875075655002

SIZE/TYPE	BUSINESS UNIT	STATUS	PAGE
8.0 x 11.7	eiCap	Valid	4/9

This electronic component has been designed and developed for usage in general electronic equipment only. This product is not authorized for use in equipment where a higher safety standard and reliability standard is especially required or where a failure of the product is reasonably expected to cause severe personal injury or death, unless the parties have executed an agreement specifically governing such use. Moreover Würth Elektronik eiSos GmbH & Co KG products are neither designed nor intended for use in areas such as military, aerospace, aviation, nuclear control, submarine, transportation (automotive control, train control, ship control), transportation signal, disaster prevention, medical, public information network etc.. Würth Elektronik eiSos GmbH & Co KG must be informed about the intent of such usage before the design-in stage. In addition, sufficient reliability evaluation checks for safety must be performed on every electronic component which is used in electrical circuits that require high safety and reliability functions or performance.

chanhvinh.com

Classification Reflow Profile for SMT components:

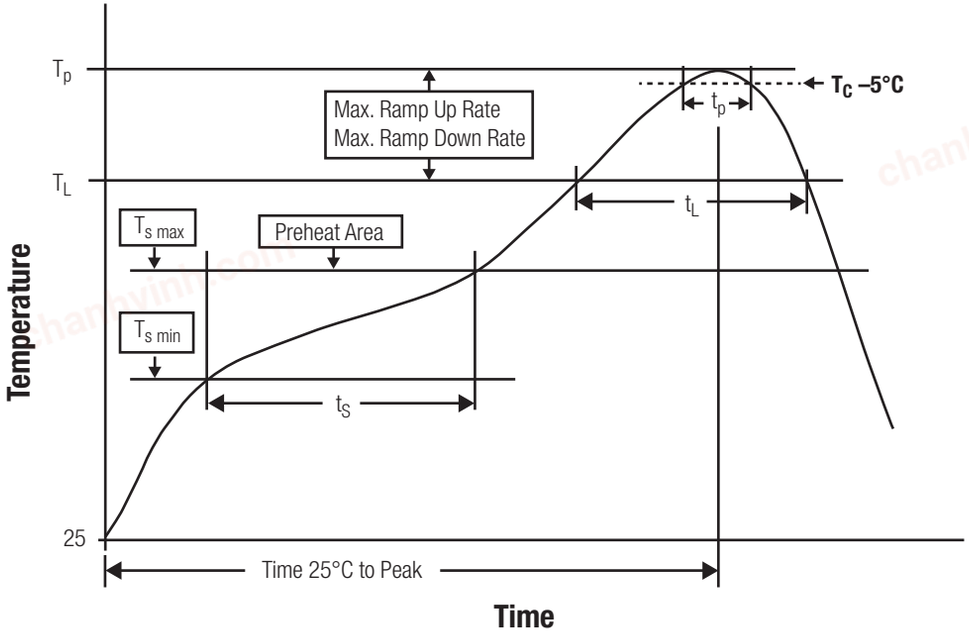

Classification Reflow Soldering Profile:

Profile Feature		Value
Preheat Temperature Min	$T_{s\ min}$	150 °C
Preheat Temperature Max	$T_{s\ max}$	200 °C
Preheat Time t_s from $T_{s\ min}$ to $T_{s\ max}$	t_s	60 - 120 seconds
Ramp-up Rate (T_L to T_P)		3 °C/ second max.
Liquidous Temperature	T_L	217 °C
Time t_L maintained above T_L	t_L	60 - 150 seconds
Peak package body temperature	T_p	$T_p \leq T_c$, see Table below
Time within 5°C of actual peak temperature	t_p	20 - 30 seconds
Ramp-down Rate (T_P to T_L)		6 °C/ second max.
Time 25°C to peak temperature		8 minutes max.

refer to IPC/ JEDEC J-STD-020E

Package Classification Reflow Temperature (T_c):

Properties	Volume mm³ <350	Volume mm³ 350-2000	Volume mm³ >2000
PB-Free Assembly I Package Thickness < 1.6 mm	260 °C	260 °C	260 °C
PB-Free Assembly I Package Thickness 1.6 mm - 2.5 mm	260 °C	250 °C	245 °C
PB-Free Assembly I Package Thickness > 2.5 mm	250 °C	245 °C	245 °C

refer to IPC/ JEDEC J-STD-020E

RoHS COMPLIANT · REACh COMPLIANT · HALOGEN FREE

WÜRTH ELEKTRONIK MORE THAN YOU EXPECT

Würth Elektronik eiSos GmbH & Co. KG
EMC & Inductive Solutions
Max-Eyth-Str. 1
74638 Waldenburg
Germany
Tel. +49 (0) 79 42 945 - 0
www.we-online.com
eiSos@we-online.com

CHECKED	REVISION	DATE (YYYY-MM-DD)	GENERAL TOLERANCE	PROJECTION METHOD
FPu	002.000	2022-09-14	DIN ISO 2768-1m	

DESCRIPTION: **WCAP-PSLC Aluminum Polymer Capacitors**

TECHNICAL REFERENCE: PSEE117680M035DVCTFB000

ORDER CODE: **875075655002**

SIZE/TYPE	BUSINESS UNIT	STATUS	PAGE
8.0 x 11.7	eiCap	Valid	5/9

This electronic component has been designed and developed for usage in general electronic equipment only. This product is not authorized for use in equipment where a higher safety standard and reliability standard is especially required or where a failure of the product is reasonably expected to cause severe personal injury or death, unless the parties have executed an agreement specifically governing such use. Moreover Würth Elektronik eiSos GmbH & Co KG products are neither designed nor intended for use in areas such as military, aerospace, aviation, nuclear control, submarine, transportation (automotive control, train control, ship control), transportation signal, disaster prevention, medical, public information network etc.. Würth Elektronik eiSos GmbH & Co KG must be informed about the intent of such usage before the design-in stage. In addition, sufficient reliability evaluation checks for safety must be performed on every electronic component which is used in electrical circuits that require high safety and reliability functions or performance.

chanhvinh.com

Cautions and Warnings:

The following conditions apply to all goods within the product series of Aluminum Polymer V-Chip SMT Capactiors of Würth Elektronik eiSos GmbH & Co. KG:

General

- This electronic component is designed and manufactured for use in general electronic equipment.
- Würth Elektronik must be asked for a written approval (following the certain PPAP level procedure) before incorporating the components into any equipment in the field such as military, aerospace, aviation, nuclear control, submarine, transportation (automotive control, train control, ship control), transportation signal, disaster prevention, medical, public information network etc. where higher safety and reliability are especially required and/or if there is the possibility of direct damage or human injury.
- Electronic components that will be used in safety-critical or high-reliability applications, should be pre-evaluated by the customer.
- Direct mechanical impact to the product shall be prevented as material of the body, pins or termination could flake or in the worst case it could break.
- Avoid any water or heavy dust on capacitors surface, which may cause electrical leakage, damage, overheating or corrosion.
- Würth Elektronik products are qualified according to international standards, which are listed in each product reliability report. Würth Elektronik does not warrant any customer qualified product characteristic, beyond Würth Elektronik specifications, for its validity and sustainability over time.
- The responsibility for the applicability of the customer specific products and use in a particular customer design is always within the authority of the customer. All technical specifications for standard products also apply to customer specific products.
- The component is designed and manufactured to be used within the datasheet specified values. If the usage and operation conditions specified in the datasheet are not met, the wire insulation may be damaged or dissolved.
- Do not drop or impact the components, as the core may flake apart the component may be damaged
- The capacitance tolerance as specified within the datasheet is only valid on the date of delivery and according specified measurement criteria.

Product specific

Storage conditions

- A storage of Würth Elektronik products for longer than 12 months is not recommended. Within other effects, the terminals may suffer degradation, resulting in bad solderability. Therefore, all products shall be used within the period of 12 months based on the day of shipment.
- Do not expose the components into direct sunlight.
- The storage condition in the original packaging is defined according to DIN EN 61760-2.
- The environment in which the capacitors are operated and stored has to have atmospheric characteristics and must be free of dew condensation and toxic gases (e.g. chlorine, ammonia, sulfur, hydrogen sulphide and hydrogen sulfate).
- Do not expose the capacitor to environments with hazardous gas, ozone, ultraviolet rays or any kind of radiation. Avoid any contact of the capacitor with direct sunshine, saltwater, spray of water or types of oil during storage.
- If a capacitor is stored for a long time without applying voltage or storage conditions of 35 °C or above and more than 75 % relative humidity, the leakage current may increase.
- The leakage current will return to normal level when applying the rated voltage to the capacitor before use. If the capacitor was stored for more than 6 months, it is recommended to apply DC working voltage to the capacitor for 30 minutes through a 1 kΩ protective series resistor.
- The storage conditions stated in the original packaging apply to the storage time and not to the transportation time of the components.

Packaging:

- The packaging specifications apply only to purchase orders comprising whole packaging units. If the ordered quantity exceeds or is lower than the specified packaging unit, packaging in accordance with the packaging specifications cannot be ensured.

Polarity

- An aluminum polymer capacitor has a polarity. In operation, this polarity needs to be considered and adhered. Reverse voltage can damage or destroy an aluminum polymer capacitor. This can finally lead to a malfunction. If the polarity in a circuit will be switched or possibly can be reversed, the usage of a non-polar capacitor shall be applied. The polarity of an aluminum polymer capacitor is for SMT V-Chip types marked as follows:on the top of the component, the negative terminal is marked with a colored semicircle or bar.

Overvoltage

- Avoid any overvoltage and do not apply a continuous overvoltage. If an overvoltage is applied to the capacitor, the leakage current can increase drastically. The applied working voltage is not allowed to exceed the rated working voltage of the specific capacitor.
- Operating temperature
- The capacitor shall not be operated above the operating temperature, which is stated in the datasheet of the specific capacitor. The achievable lifetime of the capacitor is correlating to the applied temperature. In order to achieve the maximum lifetime, the capacitor should be operated at the lowest possible temperature conditions within the application.

Ripple current

- The applied ripple current shall not exceed the specified maximum ripple current of the capacitor. If a higher ripple current as permitted is applied, it can cause excessive heat generation and higher temperature inside the capacitor. This happens due to pole change effects. This can result in damage or lifetime shortage of the capacitor and may cause deterioration. Electrolytic capacitors are regularly not designed for usage in AC applications and ripple current is applied / based due to parasitic effects on DC signal. Please see electrical specification within this datasheet for maximum allowed ripple current.

Charge and discharge

- Frequent and quick charge / discharge cycles may generate heat inside the capacitor. In worst case, this can cause a decrease of capacitance, an increase of leakage current or breakdown. Applications with rapid charge and discharge cycles should be avoided. For assistance with your application, please consult our technical support.

RoHS COMPLIANT | REACh COMPLIANT | HALOGEN FREE

WÜRTH ELEKTRONIK MORE THAN YOU EXPECT

Würth Elektronik eiSos GmbH & Co. KG
EMC & Inductive Solutions
Max-Eyth-Str. 1
74638 Waldenburg
Germany
Tel. +49 (0) 79 42 945 - 0
www.we-online.com
eiSos@we-online.com

CHECKED	REVISION	DATE (YYYY-MM-DD)	GENERAL TOLERANCE	PROJECTION METHOD
FPu	002.000	2022-09-14	DIN ISO 2768-1m	

DESCRIPTION: **WCAP-PSLC Aluminum Polymer Capacitors**

TECHNICAL REFERENCE: PSEE117680M035DVCTFB000

ORDER CODE: **875075655002**

SIZE/TYPE	BUSINESS UNIT	STATUS	PAGE
8.0 x 11.7	eiCap	Valid	6/9

This electronic component has been designed and developed for usage in general electronic equipment only. This product is not authorized for use in equipment where a higher safety standard and reliability standard is especially required or where a failure of the product is reasonably expected to cause severe personal injury or death, unless the parties have executed an agreement specifically governing such use. Moreover Würth Elektronik eiSos GmbH & Co KG products are neither designed nor intended for use in areas such as military, aerospace, aviation, nuclear control, submarine, transportation (automotive control, train control, ship control), transportation signal, disaster prevention, medical, public information network etc.. Würth Elektronik eiSos GmbH & Co KG must be informed about the intent of such usage before the design-in stage. In addition, sufficient reliability evaluation checks for safety must be performed on every electronic component which is used in electrical circuits that require high safety and reliability functions or performance.

chanhvinh.com

Soldering

- The solder profile must comply with the technical product specifications. All other profiles will void the warranty.
- All other soldering methods are at the customer's own risk.
- Strong forces which may affect the coplanarity of the component's electrical connection with the PCB (i.e. pins), can damage the part, resulting in void of the warranty.
- Customer needs to ensure that the applied solder paste, the paste thickness and solder conditions are enough to guarantee a sufficient solder result according to the relevant criteria of IPC-A-610.
- Excessive amount of solder may lead to higher tensile force and chip cracking. Insufficient amount of solder may detach the capacitor due to defective contacts.
- Do not use excessive nor insufficient flux.
- Provide enough washing when water-soluble flux is used.
- During wave soldering only the pins / terminals should have contact with hot solder bath / wave No direct contact of capacitor body with hot solder bath / wave or with any other component must be assured. Soldering must be done from the opposite PCB side to where the capacitor body is placed.

Cleaning and washing

Do not wash the assembled capacitors with the following cleaning agents:

- Petroleum system solvents: may cause degeneration of the rubber seal material
- Alkali system solvents: may cause corrosion and dissolve of the aluminum case
- Halogenated solvents: may cause corrosion and failure of the capacitor
- Acetone: component marking may be erased
- Xylene: may cause deterioration of the rubber seal material

Verify the following points when washing is applied to capacitors:

- Please monitor conductivity, pH-value, specific gravity and the water content of cleaning agents. Contamination adversely affects these characteristics.
- Be sure to not expose the capacitors under solvent rich conditions or keep capacitors inside a closed container. In addition, please dry the solvents on the PCB and the capacitor sufficiently with an air knife (temperature should be less than the maximum rated category temperature of the capacitor) for 10 minutes.
- Capacitors can be characteristically and catastrophically damaged by halogen ions, particularly by chlorine ions. The degree of the damage mainly depends upon the characteristics of the electrolyte and rubber seal material. When halogen ions come into contact with the inside of the capacitors, the foil may corrode, when a voltage is applied. This corrosion causes an extremely high leakage current, which results in venting and an open circuit defect.

All other cleaning processes and cleaning agents are not approved by Würth Elektronik. All cleaning methods need to be tested and validated by the customer.

Adhesives and coating materials

The usage of any adhesive or coating material, which contains halogenated solvents, is not allowed. Before applying adhesives or coating materials, make sure that the following points are fulfilled:

- Take care that the surface and capacitor is dry and clean before applying adhesive or coating, to avoid any contamination with flux residues or cleaning solvents.
- Assure that no flux residue or spot is left between the rubber seal material of the capacitor and the PCB.
- Do not fully cover the entire rubber seal surface with adhesive, coating or molding materials. Otherwise, the covering of the full rubber seal surface may restrain the natural diffusion of hydrogen gas. Block maximum 80% of the sealed section of a capacitor.
- If the used adhesive, coating or molding material contains halogen ions in a large amount, the halogen ions can diffuse and creep into the capacitor and can damage the capacitor. Both above explained circumstances can result in serious failures.
- Follow the specified heating and curing instructions given by supplier of the used adhesive or coating material. Avoid excessive pressure or heat on the capacitor by applying coating or adhesive.
- Take care that hardening of adhesive, coating material was correctly done, so that no solvents do remain.
- Be aware, that used solvents within adhesive and coating materials can damage the sleeve of the capacitor and can result in changes of the appearance of the sleeve (color, shine and marking).
- Please take care that a diffusion of gases can take place in an emergency (T>360°C).

Operation and usage of the capacitor

In operation and usage, take care about the following points.Do not use the capacitor within the following environmental conditions:

- Environment with high mechanical stress / shocks or vibration (please see this specific datasheet for permitted limits).
- Environment with high amount of damp condensation, water or types of oil.
- Direct sunlight, ozone, any kind of radiation or ultraviolet rays.
- Toxic gases (e.g. ammonium, chlorine and compounds, bromine and compounds, hydrogen sulfide, sulfuric acid).
- User should never touch the terminals of the capacitor directly.
- Avoid short circuit between terminals with any kind of conductive material (e.g. metal, fluid, acid, alkaline solution).

Maintenance

For industrial applications, it is recommended to perform periodic inspections. Power supplies shall be turned off before inspection to discharge the capacitor. Check the following points in case of an inspection:

- Visual inspection of the capacitor to see, if the vent operated for pressure relief and if any leakage of electrolyte has taken place.
- Measurement of electrical characteristics of the capacitor (according to datasheet, especially leakage current, capacitance and dissipation factor).

In case of deviation or failure according to the specified characteristics, take care to start appropriate actions (e.g. replacement of capacitor).

RoHS COMPLIANT | REACh COMPLIANT | HALOGEN FREE

WÜRTH ELEKTRONIK MORE THAN YOU EXPECT

Würth Elektronik eiSos GmbH & Co. KG
EMC & Inductive Solutions
Max-Eyth-Str. 1
74638 Waldenburg
Germany
Tel. +49 (0) 79 42 945 - 0
www.we-online.com
eiSos@we-online.com

CHECKED	REVISION	DATE (YYYY-MM-DD)	GENERAL TOLERANCE	PROJECTION METHOD
FPu	002.000	2022-09-14	DIN ISO 2768-1m	

DESCRIPTION: **WCAP-PSLC Aluminum Polymer Capacitors**

TECHNICAL REFERENCE: PSEE117680M035DVCTFB000

ORDER CODE: **875075655002**

SIZE/TYPE	BUSINESS UNIT	STATUS	PAGE
8.0 x 11.7	eiCap	Valid	7/9

This electronic component has been designed and developed for usage in general electronic equipment only. This product is not authorized for use in equipment where a higher safety standard and reliability standard is especially required or where a failure of the product is reasonably expected to cause severe personal injury or death, unless the parties have executed an agreement specifically governing such use. Moreover Würth Elektronik eiSos GmbH & Co KG products are neither designed nor intended for use in areas such as military, aerospace, aviation, nuclear control, submarine, transportation (automotive control, train control, ship control), transportation signal, disaster prevention, medical, public information network etc.. Würth Elektronik eiSos GmbH & Co KG must be informed about the intent of such usage before the design-in stage. In addition, sufficient reliability evaluation checks for safety must be performed on every electronic component which is used in electrical circuits that require high safety and reliability functions or performance.

chanhvinh.com

Emergency case

- In case of excessive pressure within the capacitor, the vent may operate and release this pressure. In case of vent operation, gas becomes visible when the component is in operation. If so, directly turn off the application and disconnect it from the power source. If the application is not turned off, a possible short circuit of capacitor or a short circuit due to bridging of liquefied gas can possibly damage the circuit and, in worst case, the application may be dramatically damaged. Do not stay or position body or face above or in direction of the vent, because in the event of any vent operation, the releasing gas temperature may have over 100 °C. In case the electrolyte gets in contact with skin, wash the skin immediately with plenty of soap and water. If the released gas gets in contact with eyes, rinse immediately with plenty of water and seek medical advice. In case the gas was inhaled, gargle immediately with plenty of water and seek medical advice.

Additional requirements for aluminum polymer capacitors

Circuits and designs where the usage of aluminum polymer capacitors is prohibited are:

- a) High-impedance circuits
- b) Coupling circuits
- c) Time constant circuits

Due to thermal stress, the leakage of aluminum polymer capacitor can vary within the above stated applications. If you want to use two or more aluminum polymer capacitors in series connection for circuit designs, which are significantly affected by leakage current, please contact our technical staff before usage.

Disposal

- Please contact your local responsible or organization for proper disposal of capacitor. In addition, take care to be compliant with your local governmental law and restrictions. In case of incineration, it should be done with more than 800 °C. Lower temperatures of incineration can result in toxic gases (e.g. chlorine). To avoid any explosion of capacitor, punch holes into the can or crush the capacitor before incineration.

These cautions and warnings comply with the state of the scientific and technical knowledge and are believed to be accurate and reliable. However, no responsibility is assumed for inaccuracies or incompleteness.

chanhvinh.com

RoHS COMPLIANT | REACh COMPLIANT | HALOGEN FREE

WÜRTH ELEKTRONIK MORE THAN YOU EXPECT

Würth Elektronik eiSos GmbH & Co. KG
EMC & Inductive Solutions
Max-Eyth-Str. 1
74638 Waldenburg
Germany
Tel. +49 (0) 79 42 945 - 0
www.we-online.com
eiSos@we-online.com

CHECKED	REVISION	DATE (YYYY-MM-DD)	GENERAL TOLERANCE	PROJECTION METHOD
FPu	002.000	2022-09-14	DIN ISO 2768-1m	

DESCRIPTION: **WCAP-PSLC Aluminum Polymer Capacitors**

TECHNICAL REFERENCE: PSEE117680M035DVCTFB000

ORDER CODE: **875075655002**

SIZE/TYPE	BUSINESS UNIT	STATUS	PAGE
8.0 x 11.7	eiCap	Valid	8/9

This electronic component has been designed and developed for usage in general electronic equipment only. This product is not authorized for use in equipment where a higher safety standard and reliability standard is especially required or where a failure of the product is reasonably expected to cause severe personal injury or death, unless the parties have executed an agreement specifically governing such use. Moreover Würth Elektronik eiSos GmbH & Co KG products are neither designed nor intended for use in areas such as military, aerospace, aviation, nuclear control, submarine, transportation (automotive control, train control, ship control), transportation signal, disaster prevention, medical, public information network etc.. Würth Elektronik eiSos GmbH & Co KG must be informed about the intent of such usage before the design-in stage. In addition, sufficient reliability evaluation checks for safety must be performed on every electronic component which is used in electrical circuits that require high safety and reliability functions or performance.

chanhvinh.com

Important Notes

The following conditions apply to all goods within the product range of Würth Elektronik eiSos GmbH & Co. KG:

1. General Customer Responsibility

Some goods within the product range of Würth Elektronik eiSos GmbH & Co. KG contain statements regarding general suitability for certain application areas. These statements about suitability are based on our knowledge and experience of typical requirements concerning the areas, serve as general guidance and cannot be estimated as binding statements about the suitability for a customer application. The responsibility for the applicability and use in a particular customer design is always solely within the authority of the customer. Due to this fact it is up to the customer to evaluate, where appropriate to investigate and decide whether the device with the specific product characteristics described in the product specification is valid and suitable for the respective customer application or not.

2. Customer Responsibility related to Specific, in particular Safety-Relevant Applications

It has to be clearly pointed out that the possibility of a malfunction of electronic components or failure before the end of the usual lifetime cannot be completely eliminated in the current state of the art, even if the products are operated within the range of the specifications.
In certain customer applications requiring a very high level of safety and especially in customer applications in which the malfunction or failure of an electronic component could endanger human life or health it must be ensured by most advanced technological aid of suitable design of the customer application that no injury or damage is caused to third parties in the event of malfunction or failure of an electronic component. Therefore, customer is cautioned to verify that data sheets are current before placing orders. The current data sheets can be downloaded at www.we-online.com.

3. Best Care and Attention

Any product-specific notes, cautions and warnings must be strictly observed. Any disregard will result in the loss of warranty.

4. Customer Support for Product Specifications

Some products within the product range may contain substances which are subject to restrictions in certain jurisdictions in order to serve specific technical requirements. Necessary information is available on request. In this case the field sales engineer or the internal sales person in charge should be contacted who will be happy to support in this matter.

5. Product R&D

Due to constant product improvement product specifications may change from time to time. As a standard reporting procedure of the Product Change Notification (PCN) according to the JEDEC-Standard inform about minor and major changes. In case of further queries regarding the PCN, the field sales engineer or the internal sales person in charge should be contacted. The basic responsibility of the customer as per Section 1 and 2 remains unaffected.

6. Product Life Cycle

Due to technical progress and economical evaluation we also reserve the right to discontinue production and delivery of products. As a standard reporting procedure of the Product Termination Notification (PTN) according to the JEDEC-Standard we will inform at an early stage about inevitable product discontinuance. According to this we cannot guarantee that all products within our product range will always be available. Therefore it needs to be verified with the field sales engineer or the internal sales person in charge about the current product availability expectancy before or when the product for application design-in disposal is considered. The approach named above does not apply in the case of individual agreements deviating from the foregoing for customer-specific products.

7. Property Rights

All the rights for contractual products produced by Würth Elektronik eiSos GmbH & Co. KG on the basis of ideas, development contracts as well as models or templates that are subject to copyright, patent or commercial protection supplied to the customer will remain with Würth Elektronik eiSos GmbH & Co. KG. Würth Elektronik eiSos GmbH & Co. KG does not warrant or represent that any license, either expressed or implied, is granted under any patent right, copyright, mask work right, or other intellectual property right relating to any combination, application, or process in which Würth Elektronik eiSos GmbH & Co. KG components or services are used.

8. General Terms and Conditions

Unless otherwise agreed in individual contracts, all orders are subject to the current version of the “General Terms and Conditions of Würth Elektronik eiSos Group”, last version available at www.we-online.com.

RoHS COMPLIANT | REACh COMPLIANT | HALOGEN FREE

WÜRTH ELEKTRONIK MORE THAN YOU EXPECT

Würth Elektronik eiSos GmbH & Co. KG
EMC & Inductive Solutions
Max-Eyth-Str. 1
74638 Waldenburg
Germany
Tel. +49 (0) 79 42 945 - 0
www.we-online.com
eiSos@we-online.com

CHECKED	REVISION	DATE (YYYY-MM-DD)	GENERAL TOLERANCE	PROJECTION METHOD
FPu	002.000	2022-09-14	DIN ISO 2768-1m	

DESCRIPTION: **WCAP-PSLC Aluminum Polymer Capacitors**

TECHNICAL REFERENCE: PSEE117680M035DVCTFB000

ORDER CODE: **875075655002**

SIZE/TYPE	BUSINESS UNIT	STATUS	PAGE
8.0 x 11.7	eiCap	Valid	9/9

This electronic component has been designed and developed for usage in general electronic equipment only. This product is not authorized for use in equipment where a higher safety standard and reliability standard is especially required or where a failure of the product is reasonably expected to cause severe personal injury or death, unless the parties have executed an agreement specifically governing such use. Moreover Würth Elektronik eiSos GmbH & Co KG products are neither designed nor intended for use in areas such as military, aerospace, aviation, nuclear control, submarine, transportation (automotive control, train control, ship control), transportation signal, disaster prevention, medical, public information network etc.. Würth Elektronik eiSos GmbH & Co KG must be informed about the intent of such usage before the design-in stage. In addition, sufficient reliability evaluation checks for safety must be performed on every electronic component which is used in electrical circuits that require high safety and reliability functions or performance.