chanhvinh.com

Quartz Crystal Specification

IQD Part No. + Packaging: LFXTAL012312Reel
Wurth Part No. ***830012312***

Description

- Industry standard SMD crystal
  Resistance welded, hermetically sealed in an inert atmosphere, glass to metal seals on leads
  Lead wires are mounted onto a plastic former to create a gull wing mount
- Model HC49/4HSMX
- Model Issue number 17



Frequency Parameters

Frequency	5.0MHz
Frequency Tolerance	±30.00ppm
Tolerance Condition	@ 25°C ±2°C
Frequency Stability	±50.00ppm
Operating Temperature Range	-10.00 to 60.00°C
Overtone Order	Fundamental
Ageing	±5ppm typ per year @ 25°C

Electrical Parameters

Load Capacitance (CL)	30.00pF
Shunt Capacitance (C0)	7pF max
Drive Level	500µW max
ESR	130.00Ω max

Environmental Parameters

- Shock: 981m/s², 6ms, 3 times in each of 3 mutually perpendicular planes
- Vibration: 10Hz-60Hz, 0.75mm amplitude, 60Hz-500Hz, 98.1m/s², 30mins in 3 mutually perpendicular planes
- Storage Temperature Range: -55 to 125°C

Manufacturing Details

RoHS Terminations	SnAgCu or Sn
RoHS Reflow Temp	260degC 10s

Compliance

RoHS Status (2011/65/EU)	Compliant
REACh Status	Compliant
MSL Rating (JDEC-STD-033):	Not Applicable

Packaging Details

- Pack Style: Reel Tape & reel in accordance with EIA-481-D
  Pack Size: 1,000
- *Alternative packing option available*

Outline (mm)

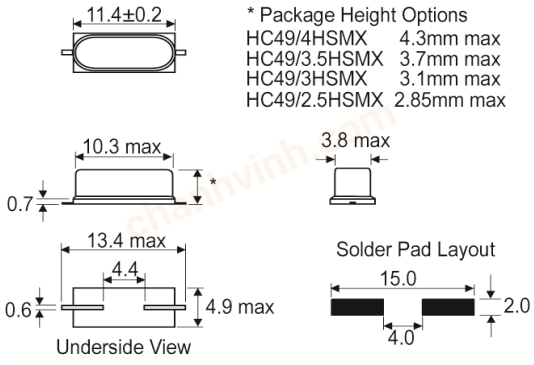

Typical Frequency vs Temperature Curves

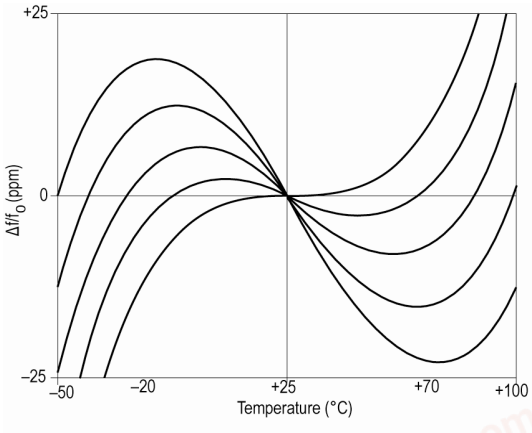

USEFUL LINKS

Toolbox:
www.we-online.com/toolbox

Product Catalog:
www.we-online.com/products

CONTACT INFORMATION:
Würth Elektronik eiSos GmbH & Co. KG
Max-Eyth-Str. 1, 74638 Waldenburg, Germany
Tel: +49(0) 7942 945-0

Email: eiSos@we-online.de
Web: www.we-online.com