chanhvinh.com

Spezifikation für Freigabe / specification for release

Kunde / customer :
Artikelnummer / part number : **7499510002**

Bezeichnung : **LAN-Übertrager WE-RJ45LAN 10/100/1000 BaseT PoE+**
description : **LAN-Transformer WE-RJ45LAN 10/100/1000 BaseT PoE+**

compliant RoHS WÜRTH ELEKTRONIK

WÜRTH ELEKTRONIK

DATUM / DATE : 2020-07-31

A Mechanische Abmessungen / dimensions :

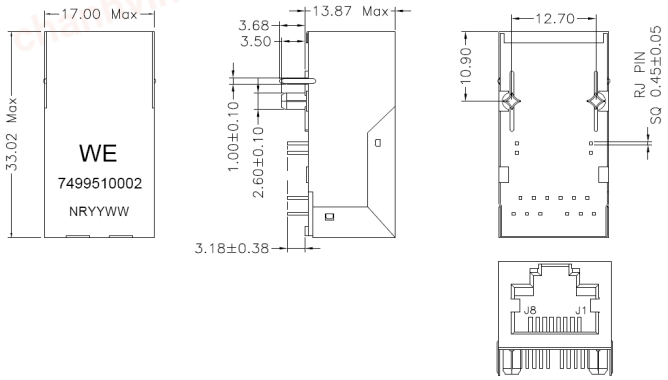

B Lötpad / soldering spec. :

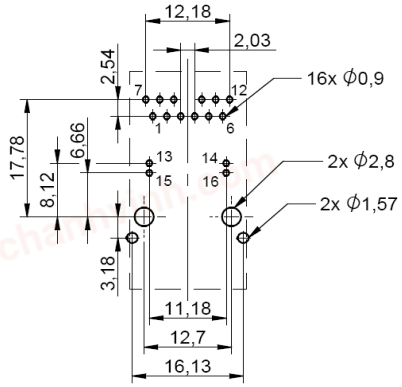

C Elektrische Eigenschaften / electrical properties :

Eigenschaften / properties	Testbedingungen / test conditions		Wert / value	Einheit / unit	tol.
Induktivität / Inductance	**100kHz / 100mV @ 18mA DC-Bias**	OCL	**350**	µH	**min.**
Übersetzungsverhältnis / Turns ratio	**100kHz / 100mV**	TR	**1 : 1**	Tx	**3%**
			1 : 1	Rx	
Insertion Loss	**1-100MHz**	IL	**-1.0**	dB	**max.**
Return Loss	**1-30MHz @ 100Ω**	RL	**-18**	dB	**min.**
	30-45MHz @ 100Ω		**-16**		
	45-60MHz @ 100Ω		**-13.5**		
	60-80MHz @ 100Ω		**-12**		
Cross Talk	**1-100MHz**	CT	**-30**	dB	**min.**
Common Mode Rejection	**1-100MHz**	CMR	**-30**	dB	**min.**
	100-500MHz		**-20**		

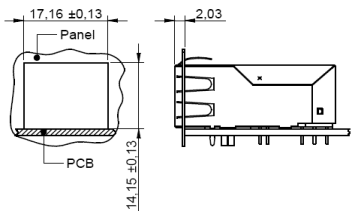

D Prüfgeräte / test equipment :

Agilent E5071C

E Testbedingungen / test conditions :

Luftfeuchtigkeit / humidity:	33%
Umgebungstemperatur / temperature:	+25°C

F Werkstoffe & Zulassungen / material & approvals :

Basismaterial / base material:	Ferrit/ ferrite
Draht / wire:	0UEW 180°C
Kontaktmaterial/ contact plating:	100% tin w. nickel underpalting 30µ"gold plating on contact area
Gehäuse / housing	Thermoplastic UL-94V0
LED	
Shield	50µ" nickel over 0.01" cooper alloy

G Eigenschaften / general specifications :

Betriebstemp. / operating temperature: -40°C - + 85°C
Hochspannungsprüfung / Hipot test: 1500Vrms 1min.
Geeignet für 1000BaseT-Anwendungen
gemäß IEEE 802.3at (600 mA) /
Compliant with IEEE 802.3at (600 mA) for 1000BaseT

Freigabe erteilt / general release:	**Kunde / customer**			
Datum / date	Unterschrift / signature			
	Würth Elektronik			
		JefL	Revision 00	2020-07-31
Geprüft / checked	Kontrolliert / approved	Name	**Änderung / modification**	Datum / date

Würth Elektronik eiSos GmbH & Co.KG
D-74638 Waldenburg · Max-Eyth-Straße 1 - 3 · Germany · Telefon (+49) (0) 7942 - 945 - 0 · Telefax (+49) (0) 7942 - 945 - 400
http://www.we-online.com

chanhvinh.com

Spezifikation für Freigabe / specification for release

Kunde / customer :

Artikelnummer / part number : **7499510002**

Bezeichnung : **LAN-Übertrager WE-RJ45LAN 10/100/1000 BaseT PoE+**

description : **LAN-Transformer WE-RJ45LAN 10/100/1000 BaseT PoE+**

compliant RoHS WÜRTH ELEKTRONIK

WÜRTH ELEKTRONIK

DATUM / DATE : 2020-07-31

H Schaltbild / Schematics :

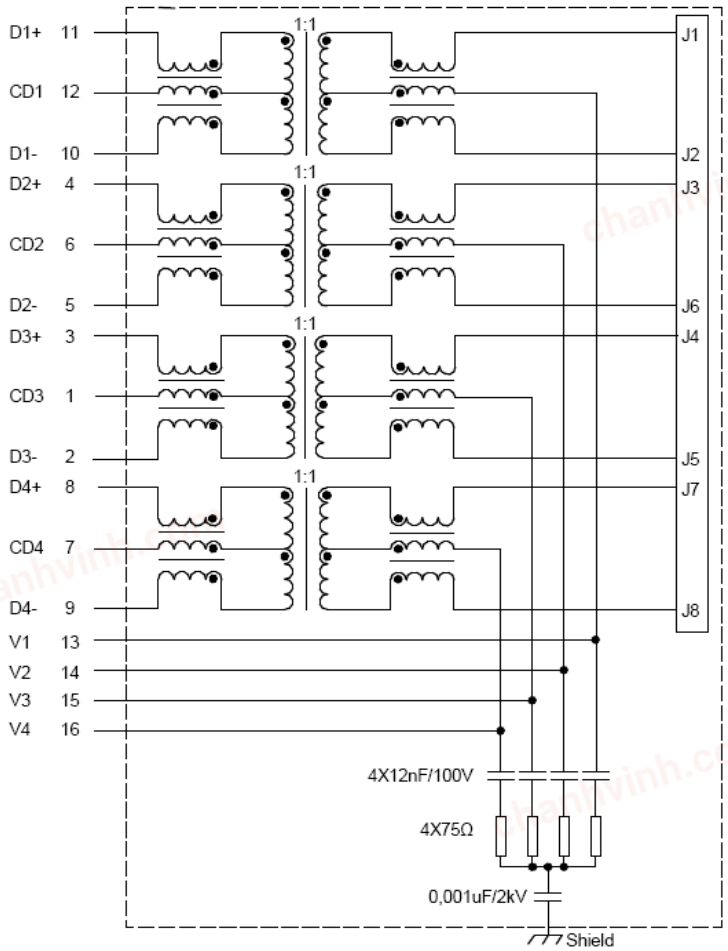

Freigabe erteilt / general release:	**Kunde / customer**			
Datum / date	Unterschrift / signature			
	Würth Elektronik			
		JefL	Revision 00	2020-07-31
Geprüft / checked	Kontrolliert / approved	Name	**Änderung / modification**	Datum / date

Würth Elektronik eiSos GmbH & Co.KG

D-74638 Waldenburg · Max-Eyth-Straße 1 - 3 · Germany · Telefon (+49) (0) 7942 - 945 - 0 · Telefax (+49) (0) 7942 - 945 - 400

http://www.we-online.com

chanhvinh.com

Spezifikation für Freigabe / specification for release

Kunde / customer :
Artikelnummer / part number : **7499510002**
Bezeichnung : **LAN-Übertrager WE-RJ45LAN 10/100/1000 BaseT PoE+**
description : **LAN-Transformer WE-RJ45LAN 10/100/1000 BaseT PoE+**

DATUM / DATE : 2020-07-31

I Verpackungsspezifikation / package specification :

PACKAGING(Tray)

Tray

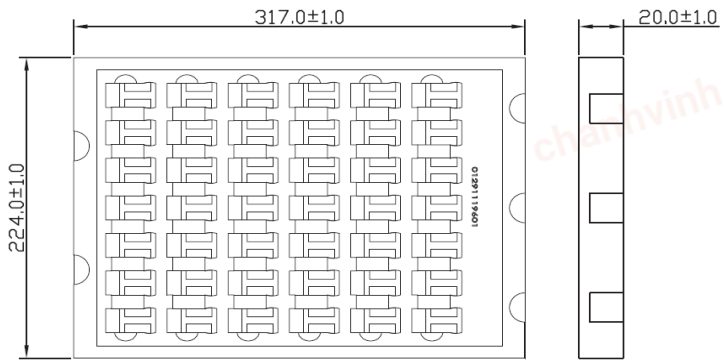

Carton

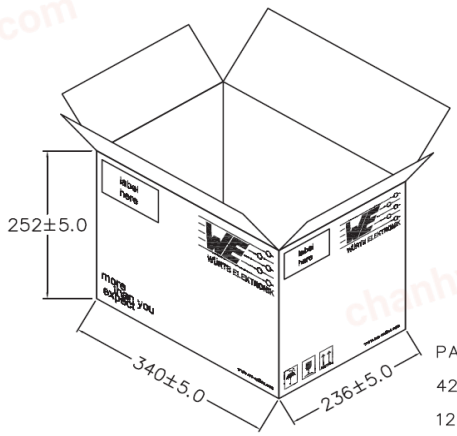

PACKING QUANTITY:
42pcs Finished Goods / Tray
12 Tray (504pcs Finished Goods) / Carton
Dimensions in mm

Freigabe erteilt / general release:	**Kunde / customer**			
Datum / date	Unterschrift / signature			
	Würth Elektronik			
		JefL	Revision 00	2020-07-31
Geprüft / checked	Kontrolliert / approved	Name	**Änderung / modification**	Datum / date

This electronic component has been designed and developed for usage in general electronic equipment. Before incorporating this component into any equipment where higher safety and reliability is especially required or if there is the possibility of direct damage or injury to human body, for example in the range of aerospace, aviation, nuclear control, submarine, transportation, (automotive control, train control, ship control), transportation signal, disaster prevention, medical, public information network etc, Würth Elektronik eiSos GmbH must be informed before the design-in stage. In addition, sufficient reliability evaluation checks for safety must be performed on every electronic component which is used in electrical circuits that require high safety and reliability functions or performance.

Würth Elektronik eiSos GmbH & Co.KG
D-74638 Waldenburg · Max-Eyth-Straße 1 - 3 · Germany · Telefon (+49) (0) 7942 - 945 - 0 · Telefax (+49) (0) 7942 - 945 - 400
http://www.we-online.com