chanhvinh.com

Spezifikation für Freigabe / specification for release

Kunde / customer :

Artikelnummer / part number : **74990111215A**

Bezeichnung : **LAN-Übertrager WE-RJ45LAN 10/100BaseT**

description : **LAN-Transformer WE-RJ45LAN 10/100BaseT**

compliant RoHS WÜRTH ELEKTRONIK

WÜRTH ELEKTRONIK

DATUM / DATE : 2015-09-14

A Mechanische Abmessungen / dimensions :

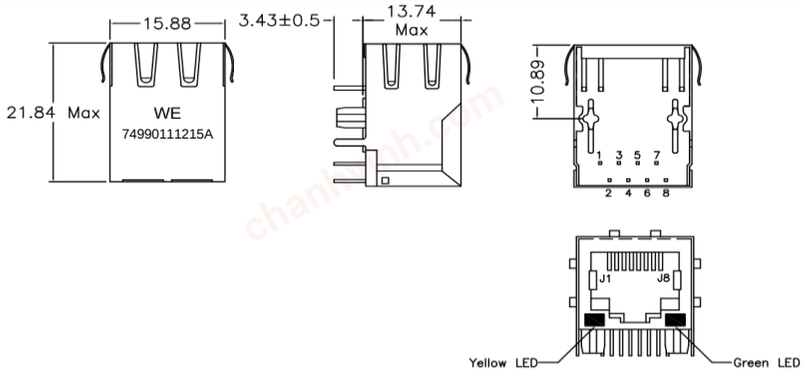

B Lötpad / soldering spec. :

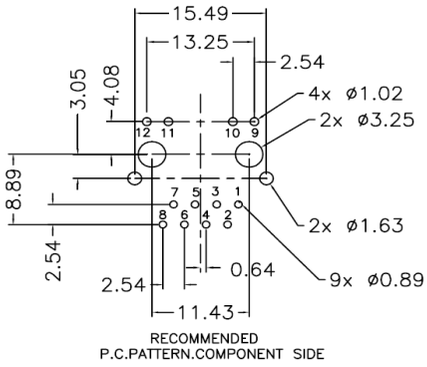

C Elektrische Eigenschaften / electrical properties :

Eigenschaften / properties	Testbedingungen / test conditions		Wert / value	Einheit / unit	tol.
Induktivität / Inductance	**100kHz / 100mV @ 8mA DC-Bias**	OCL	**350**	µH	**min.**
Übersetzungsverhältnis / Turns ratio	**100kHz / 100mV**	TR	**1 : 1**	Tx	**3%**
			1 : 1	Rx	
Insertion Loss	**1-100MHz**	IL	**-1,3**	dB	**max.**
Return Loss	**1-10MHz @ 100Ω**	RL	**-20**	dB	**min.**
	10-30MHz @ 100Ω		**-16**		
	30-60MHz @ 100Ω		**-12**		
	60-80MHz @ 100Ω		**-10**		
Common Mode Rejection	**1-500MHz**	CMR	**-25**	dB	**min.**
Crosstalk	**1-30MHz**	CT	**-40**	dB	**min.**
	30-60MHz		**-35**		
	60-100MHz		**-30**		

D Prüfgeräte / test equipment :

HP4395A

E Testbedingungen / test conditions :

Luftfeuchtigkeit / humidity:	33%
Umgebungstemperatur / temperature:	+25°C

F Werkstoffe & Zulassungen / material & approvals :

Basismaterial / base material:	Ferrit/ ferrite
Draht / wire:	4UEW 180°C
Kontaktmaterial/ contact plating:	100% tin w. nickel underpalting 30µ"gold plating on contact area
Gehäuse / housing	Thermoplastic UL-94V0
LED	1,8-2,8 V/ 20mA
Shield	50µ" nickel over 0.01" cooper alloy

G Eigenschaften / general specifications :

Betriebstemp. / operating temperature: 0°C - +70°C

Hochspannungsprüfung / Hipot test: 1500Vrms 1min.

Geeignet für 10/100Base-TX gemäß IEEE 802.3u /
Compliant with IEEE 802.3u for 10/100Base-TX-Applications

Auto MDIX fähig / Auto MDIX capable

JaB	Revision 03	2015-09-14
Mle	Revision 02	2012-09-04
Mle	Revision 01	2012-08-30
Mle	Revision 00	2011-12-12
Name	**Änderung / modification**	Datum / date

Datum / date

Unterschrift / signature

Würth Elektronik

Geprüft / checked

Kontrolliert / approved

Würth Elektronik eiSos GmbH & Co.KG

D-74638 Waldenburg · Max-Eyth-Straße 1 - 3 · Germany · Telefon (+49) (0) 7942 - 945 - 0 · Telefax (+49) (0) 7942 - 945 - 400

http://www.we-online.com

chanhvinh.com

Spezifikation für Freigabe / specification for release

Kunde / customer :

Artikelnummer / part number : **74990111215A**

Bezeichnung : **LAN-Übertrager WE-RJ45LAN 10/100BaseT**

description : **LAN-Transformer WE-RJ45LAN 10/100BaseT**

compliant RoHS WÜRTH ELEKTRONIK

WÜRTH ELEKTRONIK

DATUM / DATE : 2015-09-14

H Schaltbild / Schematics :

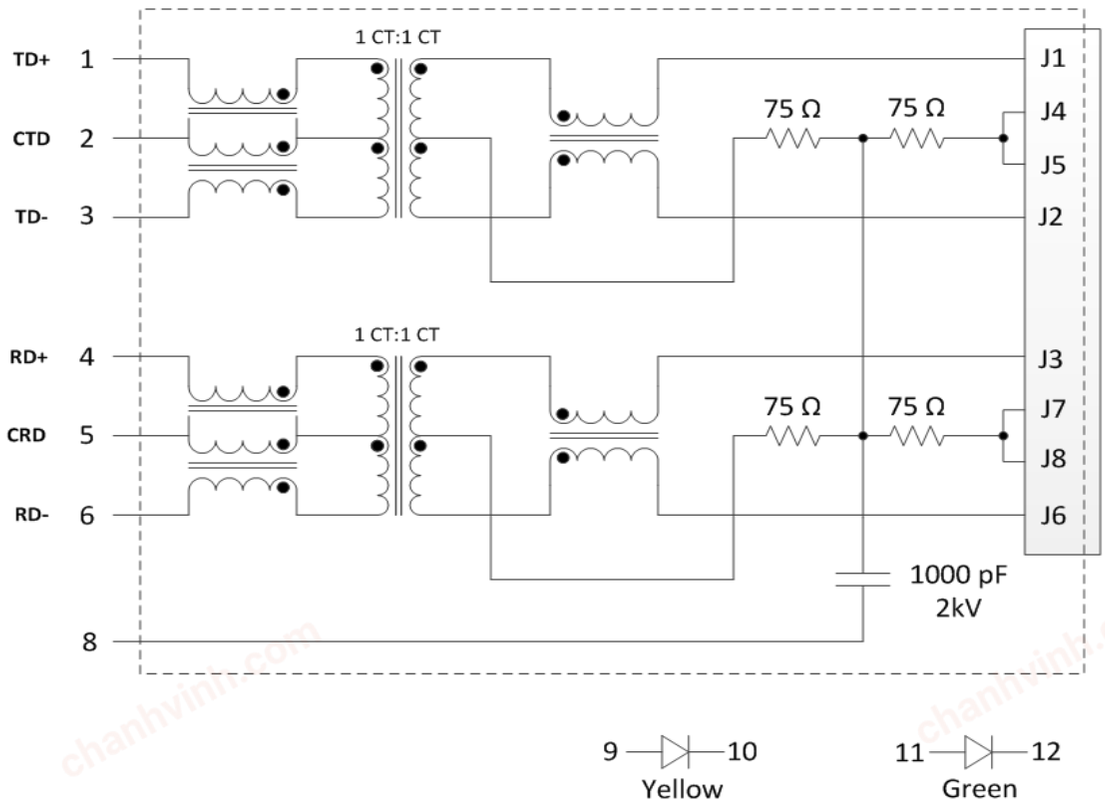

Freigabe erteilt / general release:	**Kunde / customer**
Datum / date	Unterschrift / signature
	Würth Elektronik
Geprüft / checked	Kontrolliert / approved

JaB	Revision 03	2015-09-14
Mle	Revision 02	2012-09-04
Mle	Revision 01	2012-08-30
Mle	Revision 00	2011-12-12
Name	**Änderung / modification**	Datum / date

Würth Elektronik eiSos GmbH & Co.KG

D-74638 Waldenburg · Max-Eyth-Straße 1 - 3 · Germany · Telefon (+49) (0) 7942 - 945 - 0 · Telefax (+49) (0) 7942 - 945 - 400

http://www.we-online.com

chanhvinh.com

Spezifikation für Freigabe / specification for release

Kunde / customer :
Artikelnummer / part number : **74990111215A**
Bezeichnung : **LAN-Übertrager WE-RJ45LAN 10/100BaseT**
description : **LAN-Transformer WE-RJ45LAN 10/100BaseT**

compliant RoHS WÜRTH ELEKTRONIK

WÜRTH ELEKTRONIK

DATUM / DATE : 2015-09-14

I Rollenspezifikation / tape and reel specification :

Tube

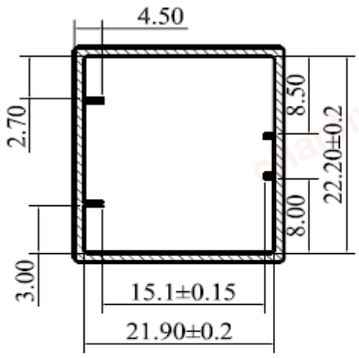

Profile view

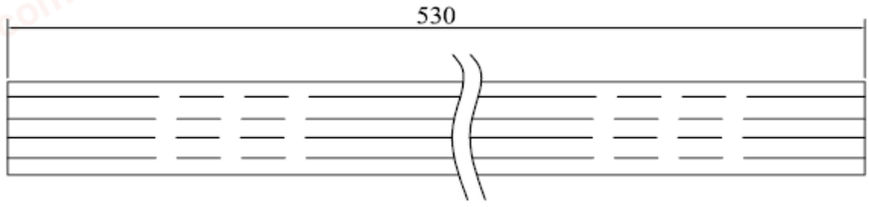

Top view

Carton

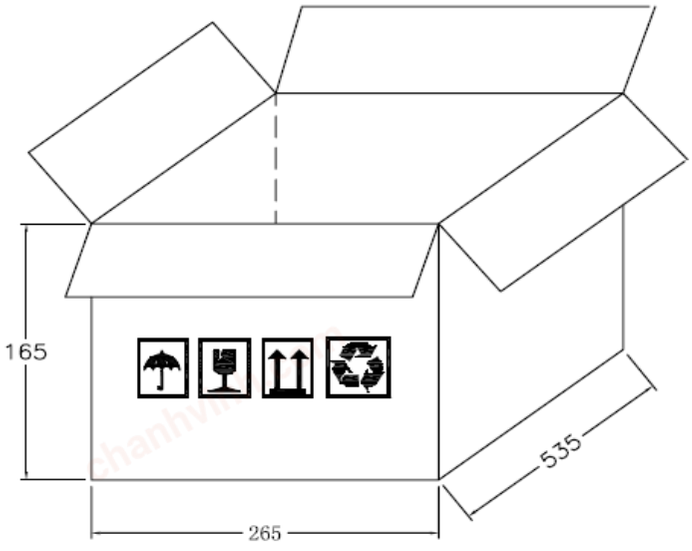

Package Quantity:

tube= 29pcs
carton= 1740pcs

dimensions in mm

Freigabe erteilt / general release:	**Kunde / customer**			
Datum / date	Unterschrift / signature	JaB	Revision 03	2015-09-14
	Würth Elektronik	Mle	Revision 02	2012-09-04
		Mle	Revision 01	2012-08-30
		Mle	Revision 00	2011-12-12
Geprüft / checked	Kontrolliert / approved	Name	**Änderung / modification**	Datum / date

This electronic component has been designed and developed for usage in general electronic equipment. Before incorporating this component into any equipment where higher safety and reliability is especially required or if there is the possibility of direct damage or injury to human body, for example in the range of aerospace, aviation, nudear control, submarine, transportation, (automotive control, train control, ship control), transportation signal, disaster prevention, medical, public information network etc, Würth Elektronik eiSos GmbH must be informed before the design-in stage. In addition, sufficient reliability evaluation checks for safety must be performed on every electronic component which is used in electrical circuits that require high safety and reliability functions or performance.

Würth Elektronik eiSos GmbH & Co.KG
D-74638 Waldenburg · Max-Eyth-Straße 1 - 3 · Germany · Telefon (+49) (0) 7942 - 945 - 0 · Telefax (+49) (0) 7942 - 945 - 400
http://www.we-online.com