chanhvinh.com

Spezifikation für Freigabe / specification for release

Kunde / customer :

Artikelnummer / part number : **744042100** LF

Bezeichnung : **SPEICHERDROSSEL WE-TPC**

description : **POWER-CHOKE WE-TPC**

RoHS compliant

WÜRTH ELEKTRONIK

DATUM / DATE : 2004-10-11

A Mechanische Abmessungen / dimensions:

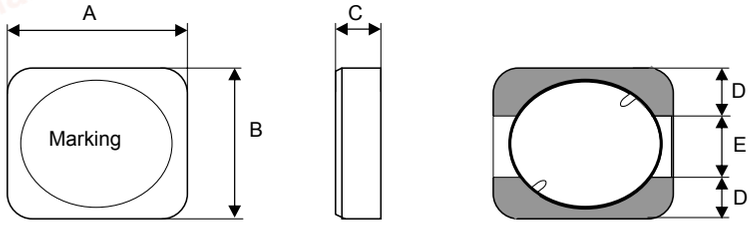

	Typ M	
A	**4,8 ± 0,2**	mm
B	**4,8 ± 0,2**	mm
C	**1,8 ± 0,2**	mm
D	**1,60typ.**	mm
E	**1,60 typ.**	mm
F		
G		
H		

Marking = Inductance code

B Elektrische Eigenschaften / electrical properties:

Eigenschaften / properties	Testbedingungen / test conditions		Wert / value	Einheit / unit	tol.
Induktivität / inductance	**100 kHZ / 0,1V**	L	**10,00**	µH	**± 30%**
DC-Widerstand / DC-resistance	**@ 20°C**	$R_{DC\ typ}$	**0,130**	Ω	**typ.**
DC-Widerstand / DC-resistance	**@ 20°C**	$R_{DC\ max}$	**0,150**	Ω	**max.**
Nennstrom / rated current	**ΔT=30 K**	I_{DC}	**1300**	mA	**max.**
Sättigungsstrom / saturation current	**|ΔL/L|<35%**	I_{sat}	**1000**	mA	**typ.**
Eigenres.-Frequenz / self-res.-fequency		SRF	**45,00**	MHz	**typ.**

C Lötpad / soldering spec.:

[mm]

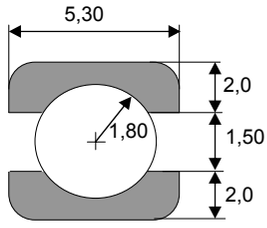

D Prüfgeräte / test equipment:

HP 4274 A für/for L und/and Q

HP 34401 A für/for R_{DC} und I_{DC}

E Testbedingungen / test conditions:

Luftfeuchtigkeit / humidity:	33%
Umgebungstemperatur / temperature:	+20°C

F Werkstoffe & Zulassungen / material & approvals:

Basismaterial / base material:	Ferrit
Draht / wire:	Class F
Endoberfläche / finishing electrode:	Sn/Ag/Cu - 96.5/3.0/0.5%

G Eigenschaften / general specifications:

Betriebstemp. / operating temperature: -40°C - + 115°C

Umgebungstemp. / ambient temperature: -40°C - + 85°C

It is recommended that the temperature of the part does not exceed 115°C under worst case operating conditions.

Freigabe erteilt / general release:

Kunde / customer	Würth Elektronik
Datum / date	Unterschrift / signature
Geprüft / checked	Kontrolliert / approved

MST	Version 3	04-10-11
MST	Version 2	04-08-09
MPH	Version 1	03-03-20
Name	**Änderung / modification**	Datum / date

Würth Elektronik eiSos GmbH & Co.KG

D-74638 Waldenburg · Max-Eyth-Strasse 1 - 3 · Germany · Telefon (+49) (0) 7942 - 945 - 0 · Telefax (+49) (0) 7942 - 945 - 400

http://www.we-online.com

chanhvinh.com

Spezifikation für Freigabe / specification for release

Kunde / customer :
Artikelnummer / part number : **744042100**

LF

RoHS compliant

Bezeichnung : **SPEICHERDROSSEL WE-TPC**
description : **POWER-CHOKE WE-TPC**

DATUM / DATE : 2004-10-11

H Induktivitätskurve / Inductance curve :

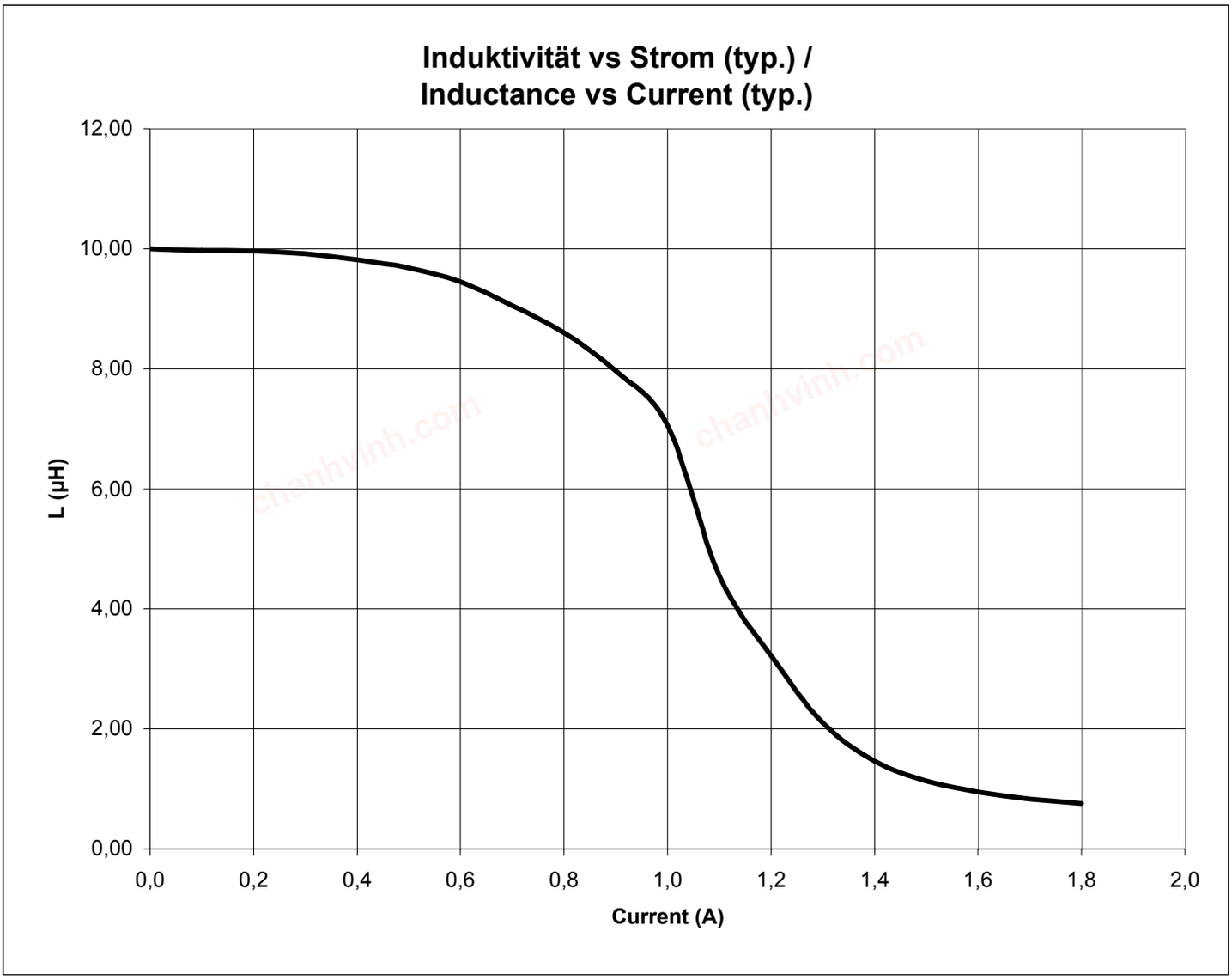

Freigabe erteilt / general release:	**Kunde / customer**			
Datum / date	Unterschrift / signature			
	Würth Elektronik	MST	Version 3	04-10-11
		MST	Version 2	04-08-09
		MPH	Version 1	03-03-20
Geprüft / checked	Kontrolliert / approved	Name	**Änderung / modification**	Datum / date

Würth Elektronik eiSos GmbH & Co.KG
D-74638 Waldenburg · Max-Eyth-Strasse 1 - 3 · Germany · Telefon (+49) (0) 7942 - 945 - 0 · Telefax (+49) (0) 7942 - 945 - 400
http://www.we-online.com

chanhvinh.com

Spezifikation für Freigabe / specification for release

Kunde / customer :

Artikelnummer / part number : **744042100** LF

Bezeichnung : **SPEICHERDROSSEL WE-TPC**

description : **POWER-CHOKE WE-TPC**

LEAD FREE WÜRTH ELEKTRONIK

RoHS compliant

WÜRTH ELEKTRONIK

DATUM / DATE : 2004-10-11

I Rollenspezifikation / tape and reel specification:

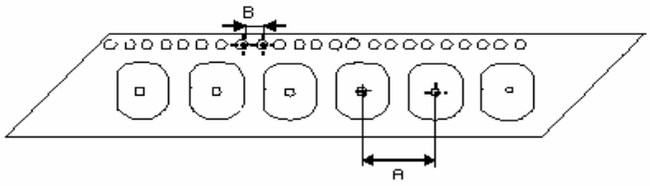

Gurtspezifikation / Tape specification:		
A	**8,0 ±1,0**	mm
B	**4,0 ±1,0**	mm

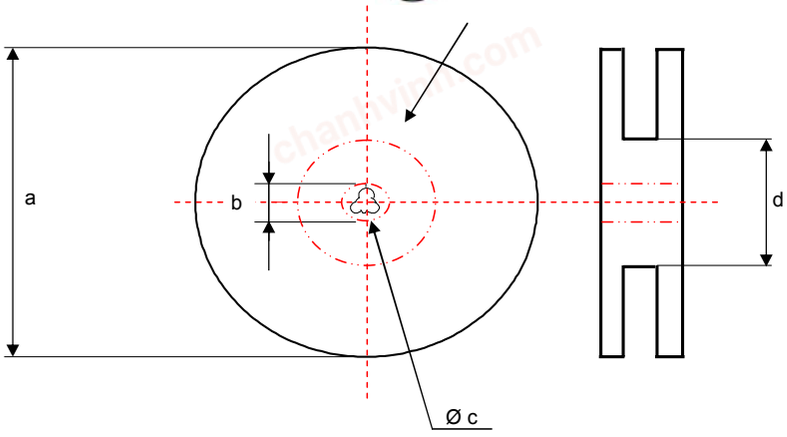

Rollenspezifikation / Reel specification:		
a	**178 ± 0,5**	mm
b	**20,20 ± 0,1**	mm
c	**13,00** $^{+0.5}_{-1.0}$	mm
d	**50,0 ± 1,0**	mm

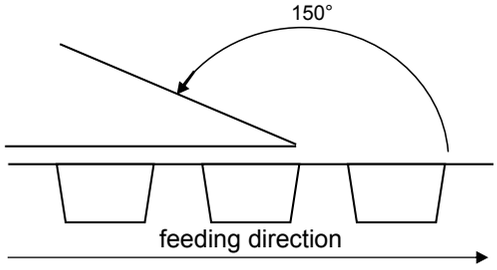

The force for tearing off cover tape is
20 to 70 grams in arrow direction

Freigabe erteilt / general release:

Kunde / customer	
Datum / date	Unterschrift / signature
Würth Elektronik	
Geprüft / checked	Kontrolliert / approved

MST	Version 3	04-10-11
MST	Version 2	04-08-09
MPH	Version 1	03-03-20
Name	**Änderung / modification**	Datum / date

This electronic component is designed and developed with the intention for use in general electronics equipments. Before incorporating the components into any equipments in the field such as aerospace, aviation, nuclear control, submarine, transportation, (automotive control, train control, ship control), transportation signal, disaster prevention, medical, public information network etc. where higher safety and reliability are especially required or if there is possibility of direct damage or injury to human body. In addition, even electronic component in general electronic equipments, when used in electrical circuits that require high safety, reliability functions or performance, the sufficient reliability evaluation-check for the safety must be performed before use. It is essential to give consideration when to install a protective circuit at the design stage.

Würth Elektronik eiSos GmbH & Co.KG

D-74638 Waldenburg · Max-Eyth-Strasse 1 - 3 · Germany · Telefon (+49) (0) 7942 - 945 - 0 · Telefax (+49) (0) 7942 - 945 - 400

http://www.we-online.com