chanhvinh.com

Dimensions: [mm]

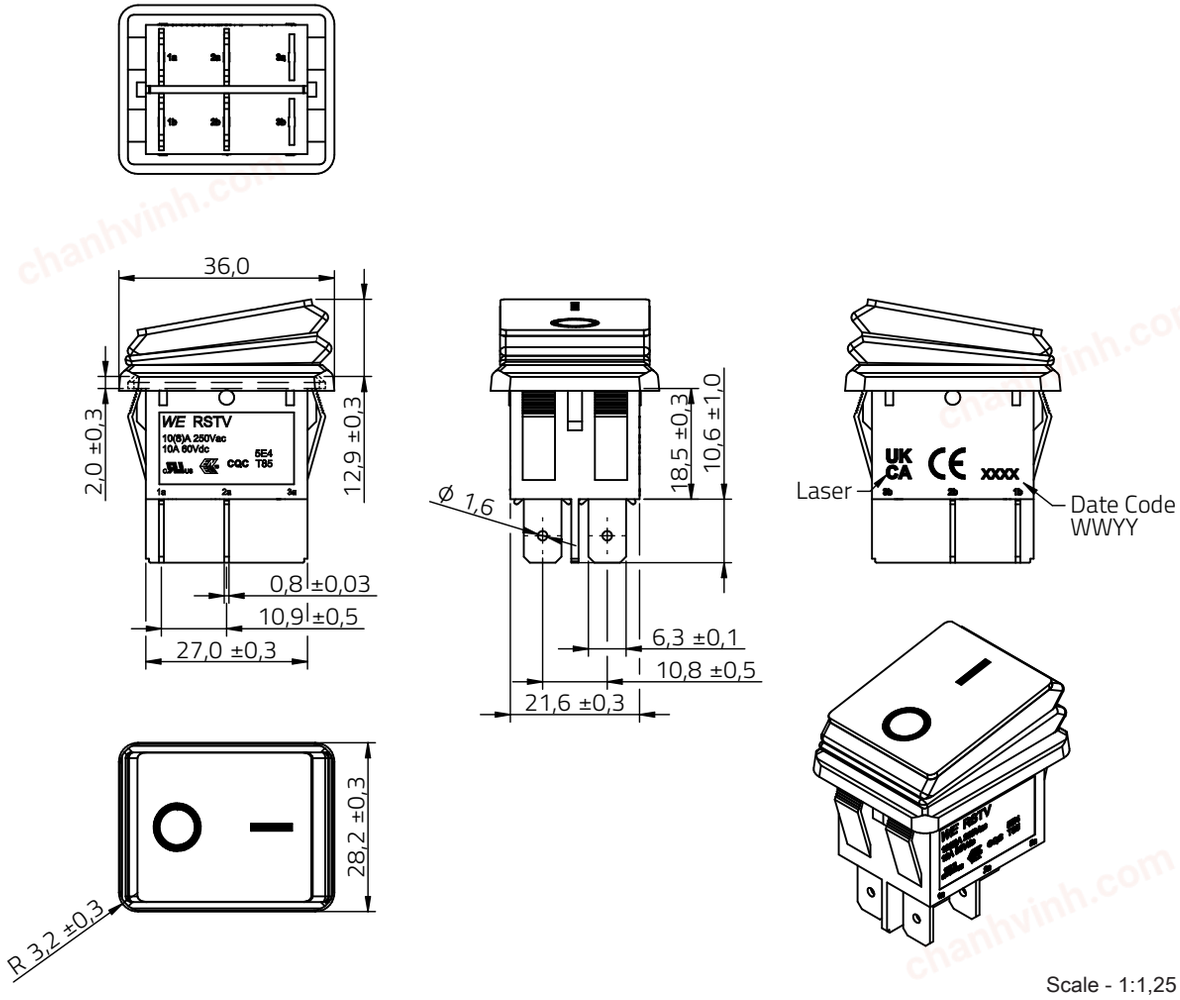

Scale - 1:1,25

Recommended Land Pattern: [mm]

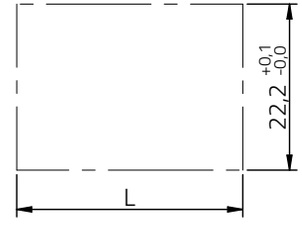

Scale - 1:1

Schematic:

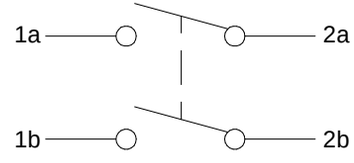

Panel cutout: [mm]

L (mm)	Panel Thickness (mm)
30.2	0.75 - 1.25
30.4	1.25 - 2.00
30.8	2.00 - 4.00

RoHS COMPLIANT · REACh COMPLIANT

WÜRTH ELEKTRONIK MORE THAN YOU EXPECT

Würth Elektronik eiSos GmbH & Co. KG
EMC & Inductive Solutions
Max-Eyth-Str. 1
74638 Waldenburg
Germany
Tel. +49 (0) 79 42 945 - 0
www.we-online.com
eiSos@we-online.com

CHECKED	REVISION	DATE (YYYY-MM-DD)	GENERAL TOLERANCE	PROJECTION METHOD
AlW	001.002	2024-05-15	DIN ISO 2768-1m	

DESCRIPTION
WS-RSTV IP65 30.2x22.2 mm panel Cut-out with 0.25 quick connect terminal Rocker Switch

ORDER CODE
471023262152

SIZE/TYPE	BUSINESS UNIT	STATUS	PAGE
36.0x28.2mm	eiCan	Valid	1/9

This electronic component has been designed and developed for usage in general electronic equipment only. This product is not authorized for use in equipment where a higher safety standard and reliability standard is especially required or where a failure of the product is reasonably expected to cause severe personal injury or death, unless the parties have executed an agreement specifically governing such use. Moreover Würth Elektronik eiSos GmbH & Co KG products are neither designed nor intended for use in areas such as military, aerospace, aviation, nuclear control, submarine, transportation, transportation signal, disaster prevention, medical, public information network etc.. Würth Elektronik eiSos GmbH & Co KG must be informed about the intent of such usage before the design-in stage. In addition, sufficient reliability evaluation checks for safety must be performed on every electronic component which is used in electrical circuits that require high safety and reliability functions or performance.

chanhvinh.com

Dimensions:

Properties	Value	Unit
Tab Thickness	0.8	mm
Tab Width	6.3	mm
Tab Hole Diameter	1.6	mm
General Information	According to IEC61210: 0.25''	

Material Properties:

Actuator Material	PC with Silicone Rubber
Actuator Flammability Rating	UL94 V-2
Actuator Color	Black
Frame Material	PA66
Frame Flammability Rating	UL94 V-2
Frame Color	Black
Spring Material	Carbon Steel
Spring Holder Material	Copper Alloy
Moveable Contactor Material	Copper Alloy
Moveable Contactor Plating	Silver
Moveable Contact Material	Copper Alloy
Moveable Contact Plating	Silver
Stationary Contact Material	Copper Alloy
Stationary Contact Plating	Silver
Terminal Material	Copper Alloy
Terminal Plating	Silver

Electrical Properties:

Properties		Test conditions	Value	Unit	Tol.
Rated Current Resistive Load	I_R	250 V (AC)	10	A	
Rated Current Motor Load	I_R	250 V (AC)	8	A	
Inrush Current Motor Load		250 V (AC)	48	A	

Electrical Properties:

Properties		Test conditions	Value	Unit	Tol.
Rated Current Resistive Load	I_R	60 V (DC)	10	A	
Contact Resistance	R		50	mΩ	max.
Insulation Resistance	R_{ISO}	500 V (DC)	100	MΩ	min.
Withstanding Voltage Pin to Pin		1 min	1500	V (AC)	
Withstanding Voltage Pin to Frame		1 min	3000	V (AC)	

refer to IEC 61058-1: 2016, IEC 61058-1-1: 2016

Mechanical Properties:

Properties	Value	Unit	Tol.
Force (OFF to ON)	1200	g	±500g
Electrical Life	50000	Cycles	
Schematic	DPST		

General Information:

Operating Temperature	0 °C up to +85 °C
Storage Conditions (in original packaging)	< 40 °C ; < 75 % RH
Moisture Sensitivity Level (MSL)	1
Ingress Protection Code	IP65

Packaging Properties:

Packaging	Tray
Packaging Unit	50
Switch Position	Off

Certification:

RoHS Approval	Compliant [2011/65/EU&2015/863]
REACh Approval	Conform or declared [(EC)1907/2006]

RoHS COMPLIANT REACh COMPLIANT

WÜRTH ELEKTRONIK MORE THAN YOU EXPECT

Würth Elektronik eiSos GmbH & Co. KG
EMC & Inductive Solutions
Max-Eyth-Str. 1
74638 Waldenburg
Germany
Tel. +49 (0) 79 42 945 - 0
www.we-online.com
eiSos@we-online.com

CHECKED	REVISION	DATE (YYYY-MM-DD)	GENERAL TOLERANCE	PROJECTION METHOD
AlW	001.002	2024-05-15	DIN ISO 2768-1m	

DESCRIPTION
WS-RSTV IP65 30.2x22.2 mm panel Cut-out with 0.25 quick connect terminal Rocker Switch

ORDER CODE
471023262152

SIZE/TYPE	BUSINESS UNIT	STATUS	PAGE
36.0x28.2mm	eiCan	Valid	2/9

This electronic component has been designed and developed for usage in general electronic equipment only. This product is not authorized for use in equipment where a higher safety standard and reliability standard is especially required or where a failure of the product is reasonably expected to cause severe personal injury or death, unless the parties have executed an agreement specifically governing such use. Moreover Würth Elektronik eiSos GmbH & Co KG products are neither designed nor intended for use in areas such as military, aerospace, aviation, nuclear control, submarine, transportation, transportation signal, disaster prevention, medical, public information network etc.. Würth Elektronik eiSos GmbH & Co KG must be informed about the intent of such usage before the design-in stage. In addition, sufficient reliability evaluation checks for safety must be performed on every electronic component which is used in electrical circuits that require high safety and reliability functions or performance.

chanhvinh.com

Certification:

UL Approval	E483308
ENEC 15 Approval	ENEC-04161
CQC Approval	CQC22002369672
Glow Wire Approval	GWEPT: 750

chanhvinh.com

RoHS COMPLIANT REACh COMPLIANT

WÜRTH ELEKTRONIK MORE THAN YOU EXPECT

Würth Elektronik eiSos GmbH & Co. KG
EMC & Inductive Solutions
Max-Eyth-Str. 1
74638 Waldenburg
Germany
Tel. +49 (0) 79 42 945 - 0
www.we-online.com
eiSos@we-online.com

CHECKED	REVISION	DATE (YYYY-MM-DD)	GENERAL TOLERANCE	PROJECTION METHOD
AlW	001.002	2024-05-15	DIN ISO 2768-1m	

DESCRIPTION
WS-RSTV IP65 30.2x22.2 mm panel Cut-out with 0.25 quick connect terminal Rocker Switch

ORDER CODE
471023262152

SIZE/TYPE	BUSINESS UNIT	STATUS	PAGE
36.0x28.2mm	eiCan	Valid	3/9

This electronic component has been designed and developed for usage in general electronic equipment only. This product is not authorized for use in equipment where a higher safety standard and reliability standard is especially required or where a failure of the product is reasonably expected to cause severe personal injury or death, unless the parties have executed an agreement specifically governing such use. Moreover Würth Elektronik eiSos GmbH & Co KG products are neither designed nor intended for use in areas such as military, aerospace, aviation, nuclear control, submarine, transportation, transportation signal, disaster prevention, medical, public information network etc.. Würth Elektronik eiSos GmbH & Co KG must be informed about the intent of such usage before the design-in stage. In addition, sufficient reliability evaluation checks for safety must be performed on every electronic component which is used in electrical circuits that require high safety and reliability functions or performance.

chanhvinh.com

Packaging Specification - Tray: [mm]

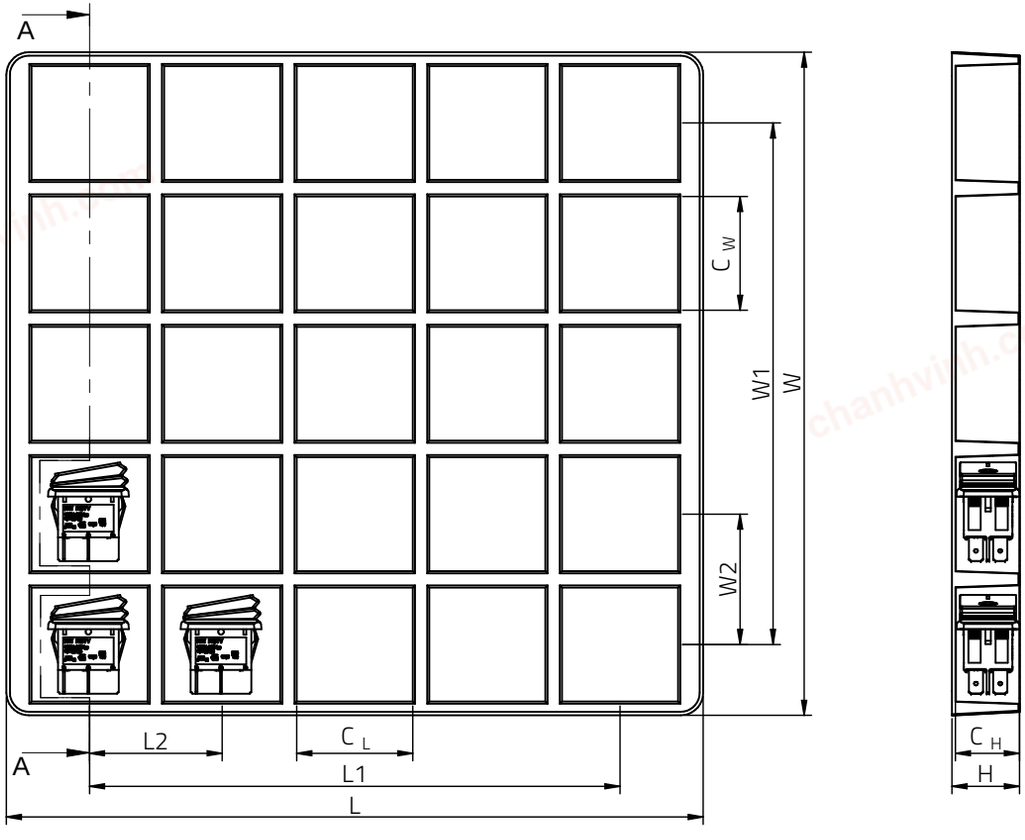

	L (mm)	L1 (mm)	L2 (mm)	C_L (mm)	W (mm)	W1 (mm)	W2 (mm)	C_W (mm)	H (mm)	C_H (mm)	Qty. (pcs.)	Material
Tolerance	typ.	typ.	typ.	typ.	typ.	typ.	typ.	typ.	typ.	typ.		
Value	310,00	236,00	59,00	54,00	295,00	232,00	58,00	53,00	30,00	27,40	25	PET

Packaging Specification - Bag: [mm]

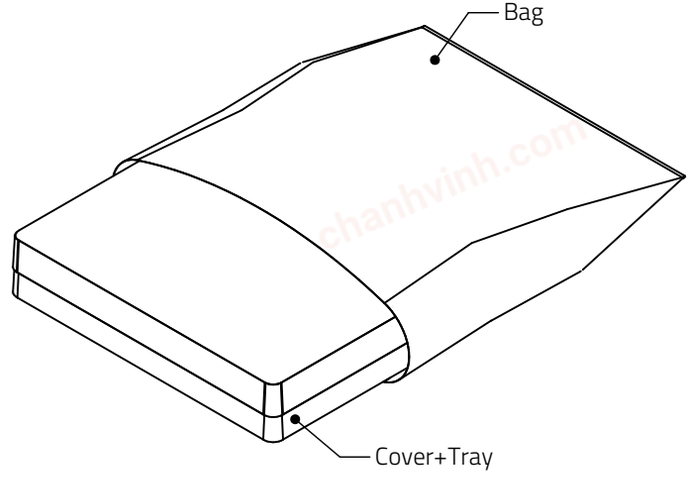

RoHS COMPLIANT · REACh COMPLIANT

WÜRTH ELEKTRONIK MORE THAN YOU EXPECT

Würth Elektronik eiSos GmbH & Co. KG
EMC & Inductive Solutions
Max-Eyth-Str. 1
74638 Waldenburg
Germany
Tel. +49 (0) 79 42 945 - 0
www.we-online.com
eiSos@we-online.com

CHECKED	REVISION	DATE (YYYY-MM-DD)	GENERAL TOLERANCE	PROJECTION METHOD
AIW	001.002	2024-05-15	DIN ISO 2768-1m	

DESCRIPTION
WS-RSTV IP65 30.2x22.2 mm panel Cut-out with 0.25 quick connect terminal Rocker Switch

ORDER CODE
471023262152

SIZE/TYPE	BUSINESS UNIT	STATUS	PAGE
36.0x28.2mm	eiCan	Valid	4/9

This electronic component has been designed and developed for usage in general electronic equipment only. This product is not authorized for use in equipment where a higher safety standard and reliability standard is especially required or where a failure of the product is reasonably expected to cause severe personal injury or death, unless the parties have executed an agreement specifically governing such use. Moreover Würth Elektronik eiSos GmbH & Co KG products are neither designed nor intended for use in areas such as military, aerospace, aviation, nuclear control, submarine, transportation, transportation signal, disaster prevention, medical, public information network etc.. Würth Elektronik eiSos GmbH & Co KG must be informed about the intent of such usage before the design-in stage. In addition, sufficient reliability evaluation checks for safety must be performed on every electronic component which is used in electrical circuits that require high safety and reliability functions or performance.

chanhvinh.com

Packaging Specification - Carton: [mm]

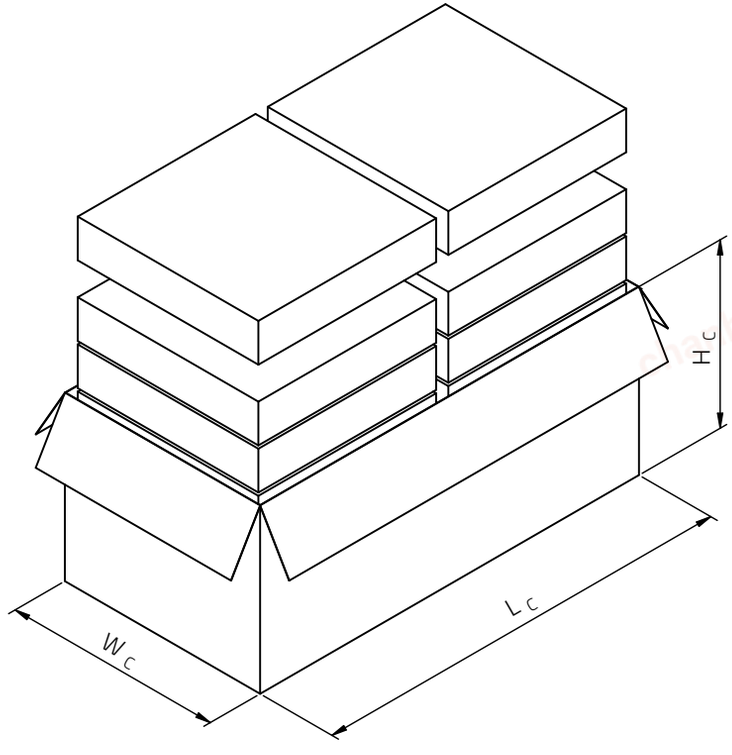

	L_C (mm)	W_C (mm)	H_C (mm)	No. of Bags (pcs.)	Qty. (pcs.)	Material
Tolerance	typ.	typ.	typ.			
Value	650	335	280	10	500	Paper

RoHS COMPLIANT
REACh COMPLIANT

WÜRTH ELEKTRONIK
MORE THAN YOU EXPECT

Würth Elektronik eiSos GmbH & Co. KG
EMC & Inductive Solutions
Max-Eyth-Str. 1
74638 Waldenburg
Germany
Tel. +49 (0) 79 42 945 - 0
www.we-online.com
eiSos@we-online.com

CHECKED	REVISION	DATE (YYYY-MM-DD)	GENERAL TOLERANCE	PROJECTION METHOD
AlW	001.002	2024-05-15	DIN ISO 2768-1m	

DESCRIPTION
WS-RSTV IP65 30.2x22.2 mm panel Cut-out with 0.25 quick connect terminal Rocker Switch

ORDER CODE
471023262152

SIZE/TYPE	BUSINESS UNIT	STATUS	PAGE
36.0x28.2mm	eiCan	Valid	5/9

This electronic component has been designed and developed for usage in general electronic equipment only. This product is not authorized for use in equipment where a higher safety standard and reliability standard is especially required or where a failure of the product is reasonably expected to cause severe personal injury or death, unless the parties have executed an agreement specifically governing such use. Moreover Würth Elektronik eiSos GmbH & Co KG products are neither designed nor intended for use in areas such as military, aerospace, aviation, nuclear control, submarine, transportation, transportation signal, disaster prevention, medical, public information network etc.. Würth Elektronik eiSos GmbH & Co KG must be informed about the intent of such usage before the design-in stage. In addition, sufficient reliability evaluation checks for safety must be performed on every electronic component which is used in electrical circuits that require high safety and reliability functions or performance.

chanhvinh.com

Further information

Component Libraries:

- 3D_SwRSTV_471023262152
- Altium_WS-RSTV (24b)
- Downloads_CADENCE_WS-RSTV (24b)
- Eagle_WS-RSTV (24b)
- IGS_SwRSTV_471023262152
- STP_SwRSTV_471023262152

Free Sample Order:

Order free samples of this article directly here!

Tutorials:

- Precaution Guide (PDF)
- UV Test Report (PDF)
- Glow Wire Test (PDF)

Würth Elektronik eiSos GmbH & Co. KG
EMC & Inductive Solutions
Max-Eyth-Str. 1
74638 Waldenburg
Germany
Tel. +49 (0) 79 42 945 - 0
www.we-online.com
eiSos@we-online.com

CHECKED	REVISION	DATE (YYYY-MM-DD)	GENERAL TOLERANCE	PROJECTION METHOD
AlW	001.002	2024-05-15	DIN ISO 2768-1m	

DESCRIPTION
WS-RSTV IP65 30.2x22.2 mm panel Cut-out with 0.25 quick connect terminal Rocker Switch

ORDER CODE
471023262152

SIZE/TYPE	BUSINESS UNIT	STATUS	PAGE
36.0x28.2mm	eiCan	Valid	6/9

This electronic component has been designed and developed for usage in general electronic equipment only. This product is not authorized for use in equipment where a higher safety standard and reliability standard is especially required or where a failure of the product is reasonably expected to cause severe personal injury or death, unless the parties have executed an agreement specifically governing such use. Moreover Würth Elektronik eiSos GmbH & Co KG products are neither designed nor intended for use in areas such as military, aerospace, aviation, nuclear control, submarine, transportation, transportation signal, disaster prevention, medical, public information network etc.. Würth Elektronik eiSos GmbH & Co KG must be informed about the intent of such usage before the design-in stage. In addition, sufficient reliability evaluation checks for safety must be performed on every electronic component which is used in electrical circuits that require high safety and reliability functions or performance.

chanhvinh.com

Cautions and Warnings:

The following conditions apply to all goods within the product series of WS-RSTV of Würth Elektronik eiSos GmbH & Co. KG:

General:

- This mechanical component is designed and manufactured for use in general electronic equipment.
- Würth Elektronik must be asked for written approval (following the PPAP procedure) before incorporating the components into any equipment in fields such as military, aerospace, aviation, nuclear control, submarine, transportation (automotive control, train control, ship control), transportation signal, disaster prevention, medical, public information network, etc. where higher safety and reliability are especially required and/or if there is the possibility of direct damage or human injury.
- Mechanical components that will be used in safety-critical or high-reliability applications, should be pre-evaluated by the customer.
- The component is designed and manufactured to be used within the datasheet specified values. If the usage and operation conditions specified in the datasheet are not met, the component may be damaged or dissolved.
- Do not drop or impact the components, the component may flake apart.
- Prevent any damage or scratches on the switch, especially on the actuator.
- Würth Elektronik products are qualified according to international standards, which are listed in each product reliability report. Würth Elektronik does not warrant any customer qualified product characteristics beyond Würth Elektroniks' specifications, for its validity and sustainability over time.
- The responsibility for the applicability of the customer specific products and use in a particular customer design is always within the authority of the customer. All technical specifications for standard products also apply to customer specific products.

Product Specific:

Soldering:

- The solder profile must comply with the technical product specifications. All other profiles will void the warranty.
- Hand soldering max. 350°C for 5 sec max..
- All other soldering methods are at the customers' own risk.
- Please keep our switch at delivery original position before and during the soldering process.
- Design the right angle part with consideration of the wave soldering process so that the parts will not touch the soldering wave during the soldering process or protect the switch part with cover fixture. Melting of the switch might cause malfunction.

Cleaning and Washing:

- If a series is washable, the general information section in the datasheet will contain the washability guidelines. Should there be no information regarding washability, the product has not been constructed to withstand a washing process. Washing agents used during the production to clean the customer application might damage or change the characteristics of the component, body, pins and/or termination. Washing agents may have a negative effect on the long-term functionality of the product.

If the parts are washable, hermetic:

- Cleaning agents that are used to clean the customer applications may damage or change the characteristics of the component, body, pins and termination.
- Please do not immerse any washable products into water or cleaning agents or put them in locations exposed to water completely.
- Do not clean washable series immediately after soldering. The cleaning agent may be absorbed into the switch through respiration while the switch cools.
- Please do not press actuator or change status /position during the cleaning and washing process.
- Using a brush during the cleaning process may deform function relevant areas. Therefore, we do not recommend using a brush during the PCB cleaning process.

If the parts are not washable:

- Parts are not constructed for washing. Washing may cause malfunctions.
- When cleaning by hand (brushing), to avoid malfunction, do not use excessive force on switch. Excessive force can deform function relevant areas.

Potting and Coating:

- If the product is potted in the customer application, the potting material may shrink or expand during and after hardening. Shrinking could lead to an incomplete seal, allowing contaminants into the body, pins or termination. Expansion could damage the components.

We recommend a manual inspection after potting or coating to avoid these effects

Storage Conditions:

- A storage of Würth Elektronik products for longer than 12 months is not recommended. Within other effects, the terminals may suffer degradation, resulting in bad solderability. Therefore, all products shall be used within the period of 12 months based on the day of shipment.
- Do not expose the components into direct sunlight.
- The storage conditions in the original packaging are defined according to DIN EN 61760-2.
- For a moisture sensitive component, the storage condition in the original packaging is defined according to IPC/JEDEC-J-STD-033. It is also recommended to return the component to the original moisture proof bag and reseal the moisture proof bag again.
- The storage conditions stated in the original packaging apply to the storage time and not to the transportation time of the components.

Packaging:

- The packaging specifications apply only to purchase orders comprising whole packaging units. If the ordered quantity exceeds or is lower than the specified packaging unit, packaging in accordance with the packaging specifications cannot be ensured.

WÜRTH ELEKTRONIK MORE THAN YOU EXPECT

Würth Elektronik eiSos GmbH & Co. KG
EMC & Inductive Solutions
Max-Eyth-Str. 1
74638 Waldenburg
Germany
Tel. +49 (0) 79 42 945 - 0
www.we-online.com
eiSos@we-online.com

CHECKED	REVISION	DATE (YYYY-MM-DD)	GENERAL TOLERANCE	PROJECTION METHOD
AlW	001.002	2024-05-15	DIN ISO 2768-1m	

DESCRIPTION: **WS-RSTV IP65 30.2x22.2 mm panel Cut-out with 0.25 quick connect terminal Rocker Switch**

ORDER CODE: **471023262152**

SIZE/TYPE	BUSINESS UNIT	STATUS	PAGE
36.0x28.2mm	eiCan	Valid	7/9

This electronic component has been designed and developed for usage in general electronic equipment only. This product is not authorized for use in equipment where a higher safety standard and reliability standard is especially required or where a failure of the product is reasonably expected to cause severe personal injury or death, unless the parties have executed an agreement specifically governing such use. Moreover Würth Elektronik eiSos GmbH & Co KG products are neither designed nor intended for use in areas such as military, aerospace, aviation, nuclear control, submarine, transportation, transportation signal, disaster prevention, medical, public information network etc.. Würth Elektronik eiSos GmbH & Co KG must be informed about the intent of such usage before the design-in stage. In addition, sufficient reliability evaluation checks for safety must be performed on every electronic component which is used in electrical circuits that require high safety and reliability functions or performance.

chanhvinh.com

Handling:

Please refer to the pre-caution guide

These cautions and warnings comply with the state of the scientific and technical knowledge and are believed to be accurate and reliable.
However, no responsibility is assumed for inaccuracies or incompleteness.

chanhvinh.com

RoHS COMPLIANT
REACh COMPLIANT

WÜRTH ELEKTRONIK
MORE THAN YOU EXPECT

Würth Elektronik eiSos GmbH & Co. KG
EMC & Inductive Solutions
Max-Eyth-Str. 1
74638 Waldenburg
Germany
Tel. +49 (0) 79 42 945 - 0
www.we-online.com
eiSos@we-online.com

CHECKED	REVISION	DATE (YYYY-MM-DD)	GENERAL TOLERANCE	PROJECTION METHOD
AIW	001.002	2024-05-15	DIN ISO 2768-1m	

DESCRIPTION
WS-RSTV IP65 30.2x22.2 mm panel Cut-out with 0.25 quick connect terminal Rocker Switch

ORDER CODE
471023262152

SIZE/TYPE	BUSINESS UNIT	STATUS	PAGE
36.0x28.2mm	eiCan	Valid	8/9

This electronic component has been designed and developed for usage in general electronic equipment only. This product is not authorized for use in equipment where a higher safety standard and reliability standard is especially required or where a failure of the product is reasonably expected to cause severe personal injury or death, unless the parties have executed an agreement specifically governing such use. Moreover Würth Elektronik eiSos GmbH & Co KG products are neither designed nor intended for use in areas such as military, aerospace, aviation, nuclear control, submarine, transportation, transportation signal, disaster prevention, medical, public information network etc.. Würth Elektronik eiSos GmbH & Co KG must be informed about the intent of such usage before the design-in stage. In addition, sufficient reliability evaluation checks for safety must be performed on every electronic component which is used in electrical circuits that require high safety and reliability functions or performance.

chanhvinh.com

Important Notes

The following conditions apply to all goods within the product range of Würth Elektronik eiSos GmbH & Co. KG:

1. General Customer Responsibility

Some goods within the product range of Würth Elektronik eiSos GmbH & Co. KG contain statements regarding general suitability for certain application areas. These statements about suitability are based on our knowledge and experience of typical requirements concerning the areas, serve as general guidance and cannot be estimated as binding statements about the suitability for a customer application. The responsibility for the applicability and use in a particular customer design is always solely within the authority of the customer. Due to this fact it is up to the customer to evaluate, where appropriate to investigate and decide whether the device with the specific product characteristics described in the product specification is valid and suitable for the respective customer application or not.

2. Customer Responsibility related to Specific, in particular Safety-Relevant Applications

It has to be clearly pointed out that the possibility of a malfunction of electronic components or failure before the end of the usual lifetime cannot be completely eliminated in the current state of the art, even if the products are operated within the range of the specifications.
In certain customer applications requiring a very high level of safety and especially in customer applications in which the malfunction or failure of an electronic component could endanger human life or health it must be ensured by most advanced technological aid of suitable design of the customer application that no injury or damage is caused to third parties in the event of malfunction or failure of an electronic component. Therefore, customer is cautioned to verify that data sheets are current before placing orders. The current data sheets can be downloaded at www.we-online.com.

3. Best Care and Attention

Any product-specific notes, cautions and warnings must be strictly observed. Any disregard will result in the loss of warranty.

4. Customer Support for Product Specifications

Some products within the product range may contain substances which are subject to restrictions in certain jurisdictions in order to serve specific technical requirements. Necessary information is available on request. In this case the field sales engineer or the internal sales person in charge should be contacted who will be happy to support in this matter.

5. Product R&D

Due to constant product improvement product specifications may change from time to time. As a standard reporting procedure of the Product Change Notification (PCN) according to the JEDEC-Standard inform about minor and major changes. In case of further queries regarding the PCN, the field sales engineer or the internal sales person in charge should be contacted. The basic responsibility of the customer as per Section 1 and 2 remains unaffected.

6. Product Life Cycle

Due to technical progress and economical evaluation we also reserve the right to discontinue production and delivery of products. As a standard reporting procedure of the Product Termination Notification (PTN) according to the JEDEC-Standard we will inform at an early stage about inevitable product discontinuance. According to this we cannot guarantee that all products within our product range will always be available. Therefore it needs to be verified with the field sales engineer or the internal sales person in charge about the current product availability expectancy before or when the product for application design-in disposal is considered. The approach named above does not apply in the case of individual agreements deviating from the foregoing for customer-specific products.

7. Property Rights

All the rights for contractual products produced by Würth Elektronik eiSos GmbH & Co. KG on the basis of ideas, development contracts as well as models or templates that are subject to copyright, patent or commercial protection supplied to the customer will remain with Würth Elektronik eiSos GmbH & Co. KG. Würth Elektronik eiSos GmbH & Co. KG does not warrant or represent that any license, either expressed or implied, is granted under any patent right, copyright, mask work right, or other intellectual property right relating to any combination, application, or process in which Würth Elektronik eiSos GmbH & Co. KG components or services are used.

8. General Terms and Conditions

Unless otherwise agreed in individual contracts, all orders are subject to the current version of the “General Terms and Conditions of Würth Elektronik eiSos Group”, last version available at www.we-online.com.

WÜRTH ELEKTRONIK
MORE THAN YOU EXPECT

Würth Elektronik eiSos GmbH & Co. KG
EMC & Inductive Solutions
Max-Eyth-Str. 1
74638 Waldenburg
Germany
Tel. +49 (0) 79 42 945 - 0
www.we-online.com
eiSos@we-online.com

CHECKED	REVISION	DATE (YYYY-MM-DD)	GENERAL TOLERANCE	PROJECTION METHOD
AlW	001.002	2024-05-15	DIN ISO 2768-1m	

DESCRIPTION
WS-RSTV IP65 30.2x22.2 mm panel Cut-out with 0.25 quick connect terminal Rocker Switch

ORDER CODE
471023262152

SIZE/TYPE	BUSINESS UNIT	STATUS	PAGE
36.0x28.2mm	eiCan	Valid	9/9

This electronic component has been designed and developed for usage in general electronic equipment only. This product is not authorized for use in equipment where a higher safety standard and reliability standard is especially required or where a failure of the product is reasonably expected to cause severe personal injury or death, unless the parties have executed an agreement specifically governing such use. Moreover Würth Elektronik eiSos GmbH & Co KG products are neither designed nor intended for use in areas such as military, aerospace, aviation, nuclear control, submarine, transportation, transportation signal, disaster prevention, medical, public information network etc.. Würth Elektronik eiSos GmbH & Co KG must be informed about the intent of such usage before the design-in stage. In addition, sufficient reliability evaluation checks for safety must be performed on every electronic component which is used in electrical circuits that require high safety and reliability functions or performance.