chanhvinh.com
more than you expect

WLMDU9456001JT / 172946001

MagI³C Power Module
LDHM - LED Step Down High Current Module

4.5 - 60V / 450mA / 4.5 - 60V Output

DESCRIPTION

The LDHM type of the MagI³C Power Module family provides a fully integrated constant current LED driver including the buck switching regulator and inductor in a package.

The 172946001 offers high efficiency and delivers up to 450mA of LED current. It operates from 4.5V input voltage up to 60V and supports up to 16 LEDs in series. It is designed for fast PWM dimming for no color shift.

It is available in an innovative industrial high power density TO263-7EP (10.16 x 13.77 x 4.57mm) package that enhances thermal performance and allows for hand or machine soldering.

The LDHM regulator has an on-board protection circuitry to guard against thermal overstress and electrical damage featuring thermal shut-down, input under-voltage lockout and LED short-circuit protections.

TYPICAL APPLICATIONS

- Indoor lighting: Spot light, down light
- Outdoor lighting: Street light, security light, tunnel light
- Outdoor lighting: High-bay light, low-bay light

FEATURES

- Peak efficiency up to 95%
- Default LED current: 350mA
- Adjustable LED current up to 450mA
- Current sharing in parallel operation for higher output current
- Wide input voltage range: 4.5V to 60V
- Output voltage range: 4.5V to 60V
- Maximum output power: 27W
- PWM dimming / Analog dimming
- Integrated shielded inductor
- Single exposed pad for best-in-class thermal performance
- Typical LED Current Accuracy ±3.5 %
- LED short circuit protections
- Under voltage lockout Protection (UVLO)
- Fixed switching frequency at 800kHz
- Compatible with ceramic and Low ESR Capacitors
- Operating ambient temp. range up to 85°C
- Operating junction temp. range: -40 to 125°C
- RoHS & REACH compliant
- Mold compound UL 94 Class V0 (flammability testing) certified
- Complies with EN 55015 radiated emissions standard

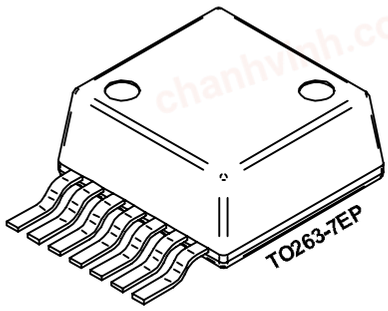

TYPICAL CIRCUIT DIAGRAM

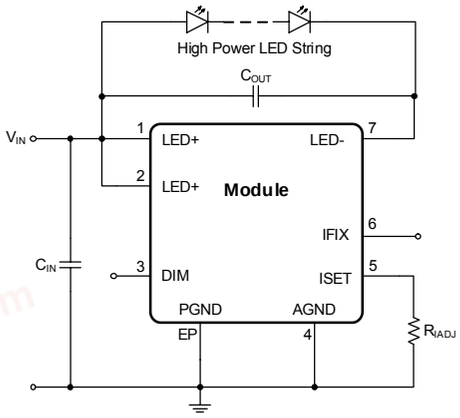

© May 2016

chanhvinh.com

WLMDU9456001JT / 172946001

MagI³C Power Module
LDHM - LED Step Down High Current Module

PACKAGE

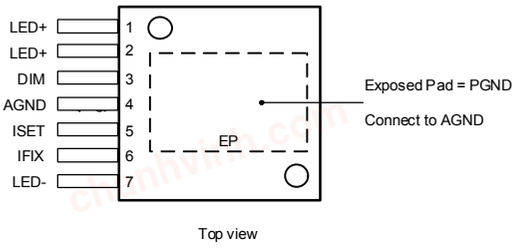

Top view

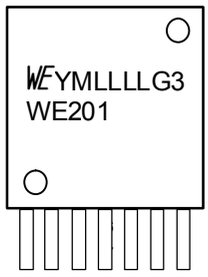

Package marking

MARKING DESCRIPTION

Marking	Description
WE	Würth Elektronik trade name
Y	Year
M	Month
LLLL	Lot trace code
G3	Lead finish code per JEDEC norm (green 3 mat sin)
WE201	Part identifier

PIN DESCRIPTION

SYMBOL	PIN #	TYPE	PIN DESCRIPTION
LED+	1, 2	Power	Supply input and rail connection to the anode of the LED string.
DIM	3	Input	Dimming control signal input. Left floating enables the driver. Optional: apply a logic level PWM signal to control the brightness of the LED string.
AGND	4	Supply	The analog ground pin is the reference point for all stated voltages and must be connected to the exposed pad (EP) externally.
ISET	5	Input	Connect a resistor between this pin and GND to adjust the LED current up to 450mA. If the default LED current of 350mA is desired, leave this pin floating.
IFIX	6	Input	Connect this pin to GND to set the default LED current of 350mA. In case a different value of LED current is required, leave this pin floating.
LED-	7	Power	The current return pin of the LED string. Connect to the cathode of the LED string.
PGND	EP	Power	Exposed Pad. Connect to copper plane(s) with thermal vias for thermal performance. Must be electrically connected to pin 4.

chanhvinh.com

WLMDU9456001JT / 172946001

MagI³C Power Module
LDHM - LED Step Down High Current Module

ORDERING INFORMATION

ORDER CODE	PART DESCRIPTION	PACKAGE	PACKING UNIT
172946001	WLMDU9456001JT	TO263-7EP	Tape and Reel with 250 Units
158998	Demonstration Board		1
178946001	Evaluation Board		1

SALES INFORMATION

SALES CONTACTS
Würth Elektronik eiSos GmbH & Co. KG EMC & Inductive Solutions Max-Eyth-Str. 1 74638 Waldenburg Germany Tel. +49 (0) 79 42 945 - 0 www.we-online.com powermodules@we-online.com

© May 2016

chanhvinh.com

WLMDU9456001JT / 172946001

MagI³C Power Module
LDHM - LED Step Down High Current Module

ABSOLUTE MAXIMUM RATINGS

Caution:
Exceeding the listed absolute maximum ratings may affect the device negatively and may cause permanent damage.

SYMBOL	PARAMETER	LIMITS		UNIT
		MIN	MAX	
LED+, LED-	LED Input and LED output to GND	-0.3	67	V
DIM	PWM Dimming input to GND	-0.3	6	V
IFIX, ISET	LED current Adjustment Pins to GND	-0.3	5	V
$V_{ESD-HBM}$	ESD, human body model (1) (All Pins except IFIX Pin 6)	-2000	2000	V
T_J	Junction temperature		150	°C
$T_{storage}$	Assembled, non operating storage temperature	0	150	°C
T_{SOLR}	Peak case/leads temperature during reflow soldering, max. 30sec (2) Maximum two cycles!		240 ±5°C	°C

OPERATING CONDITIONS

Operating conditions are conditions under which operation of the device is intended to be functional. All values are referenced to GND.
MIN and MAX limits are valid for the recommended ambient temperature range of **-40°C to 85°C.**

SYMBOL	PARAMETER	MIN (3)	TYP (4)	MAX (3)	UNIT
LED+	Input voltage	4.5	-	60	V
DIM	PWM Dimming input	0	-	5.5	V
T_A	Ambient temperature range	-40	-	85	°C
T_J	Junction temperature range	-40	-	125	°C
I_{LED}	Nominal LED current			450	mA

THERMAL SPECIFICATIONS

SYMBOL	PARAMETER	TYP	UNIT
θ_{JA}	Thermal resistance junction to ambient(5)	19.3	°C/W
θ_{JC}	Thermal resistance junction to case, no air flow	1.9	°C/W
T_{SD}	Thermal shut down, junction temperature, rising	170	°C
$T_{SD-HYST}$	Thermal shut down hysteresis, falling	10	°C

© May 2016

chanhvinh.com
more than you expect

ELECTRICAL SPECIFICATIONS

MIN and MAX limits are valid for the recommended junction temperature range of **-40°C to 125°C unless otherwise stated**. Typical values represent statistically the utmost probability at following conditions: V_{IN}=48V, I_{LED} = 350 mA.
V_{IN} is the voltage applied across LED+ and GND. I_{IN} is the input current flowing into the LED+ node. I_{LED} is a LED current flowing into the LED- pin. V_{LED} is the voltage applied across LED+ and LED-. V_{DIM} is the voltage applied across the DIM pin to GND. Resistor R_{IADJ} connect from ISET pin to GND.

SYMBOL	PARAMETER	TEST CONDITIONS	MIN (3)	TYP (4)	MAX (3)	UNIT
I_{IN}	Input current	V_{IN} = 4.5 to 60V V_{LED} = 0V; V_{DIM}=0V T_J = 25°C	2.1	2.65	3.0	mA
I_{LED}	LED current	V_{LED} = 24V; IFIX connected to GND; R_{IADJ} = not connected; T_J = -40°C to 125°C	337	350	371	mA
$I_{LED-60V}$	LED current V_{IN} = 60V	V_{IN} = 60V; V_{LED} = 36V; IFIX connected to GND; R_{IADJ} = not connected; T_J = -40°C to 125°C	338	350	374	mA
$I_{LED-ADJ450}$	Adjustment LED current	V_{LED} = 24V; IFIX floating; R_{IADJ} = 2.33kΩ; T_J = -40°C to 125°C	437	450	483	mA
$I_{LED-ADJ300}$	Adjustment LED current	V_{LED} = 24V; IFIX floating; R_{IADJ} = 3.5 kΩ; T_J = -40°C to 125°C	282	300	316	mA
$I_{LED-SHORT}$	LED short circuit current V_{IN} = 60V	V_{LED} = 0V; V_{IN} = 60V; DIM = open	800	920	1020	mA
$I_{LED-LEAK}$	"LED-" pin leakage current	V_{LED} = 0V; V_{IN} = operating max; DIM = 0V			1.2	µA
V_{DIM}	DIM pin threshold	V_{DIM} increasing		1.0	1.3	V
$V_{DIM-HYS}$	DIM pin hysteresis			0.25		V
f_{SW}	Switching frequency		0.72	0.8	0.92	MHz

NOTES

(1) The human body model is a 100pF capacitor discharged through a 1.5 kΩ resistor into each pin. The pin 6 (IFIX pin) passes ± 1 kV. Test method is per JESD22-AI14S.

(2) JEDEC J-STD020

(3) Min and Max limits are 100% production tested at 25°C. Limits over the operating temperature range are guaranteed through correlation using Statistical Quality Control (SQC) methods.

(4) Typical numbers are valid at 25°C ambient temperature and represent statistically the utmost probability assuming the Gaussian distribution.

(5) θ_{JA} measured on a 43.3 mm x 76.2 mm four layer board, with 35 µm copper , thirty five 0.3 mm thermal vias, no air flow, and 1 W power dissipation.

© May 2016

chanhvinh.com

WLMDU9456001JT / 172946001

MagI³C Power Module
LDHM - LED Step Down High Current Module

TYPICAL PERFORMANCE CURVES

If not otherwise specified, the following conditions apply: VIN = 48 V; CIN = 2.2 µF 100 V X7R ceramic capacitor for driving 5-13 power LEDs, I_{LED} = 350 mA; Single LED forward voltage used is 3.2 V; TAMB = 25 °C

Radiated Emissions EN55015 compliant: V_{IN} = 60V; I_{LED} = 350mA; C_{IN}/C_{OUT} = 2.2µF; LEDs = 16

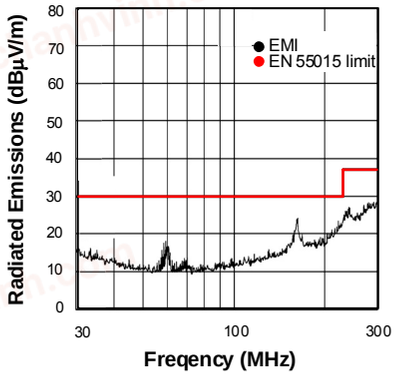

Conditions: horizontal; height = 3m; range = 10m

27D

Radiated Emissions EN55015 compliant: V_{IN} = 60V; I_{LED} = 350mA; C_{IN}/C_{OUT} = 2.2µF; LEDs = 16

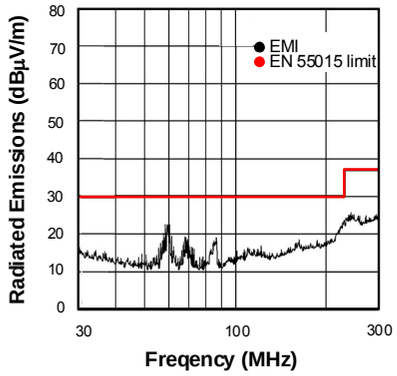

Conditions: vertical; height = 1m; range = 10m

28D

Efficiency: I_{LED} = 350mA; T_{AMB} = 25°C

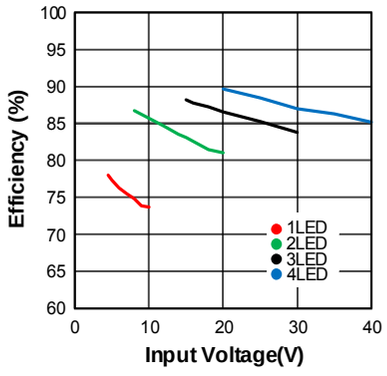

Efficiency: I_{LED} = 350mA; T_{AMB} = 25°C

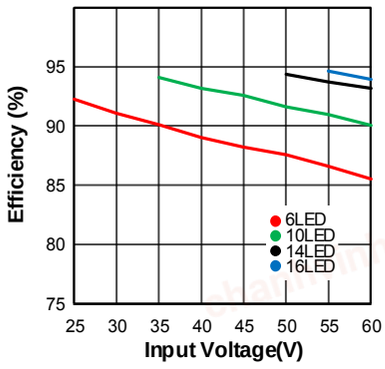

I_{LED} Regulation: 350mA; T_{AMB} = 25°C

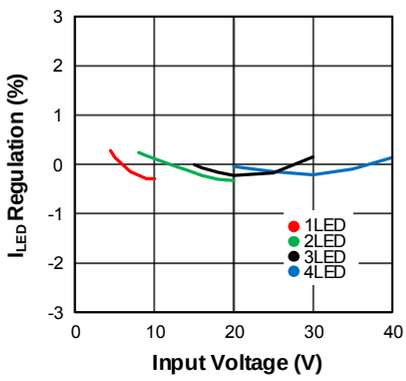

I_{LED} Regulation: 350mA; T_{AMB} = 25°C

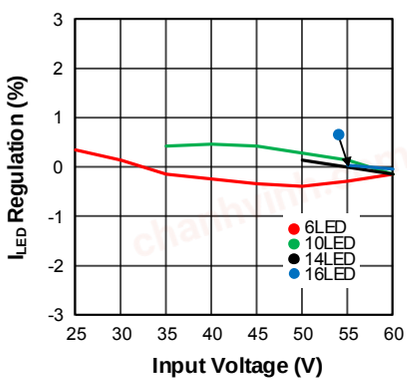

© May 2016

WLMDU9456001JT / 172946001

MagI³C Power Module
LDHM - LED Step Down High Current Module

TYPICAL PERFORMANCE CURVES

If not otherwise specified, the following conditions apply: VIN = 48 V; CIN = 2.2 µF 100 V X7R ceramic capacitor for driving 5-13 power LEDs, I_{LED} = 350 mA; Single LED forward voltage used is 3.2 V; TAMB = 25 °C

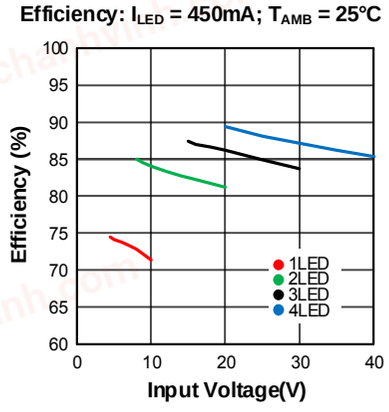

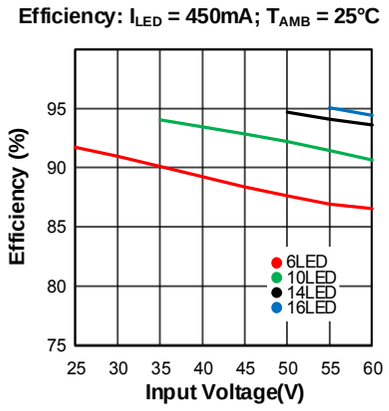

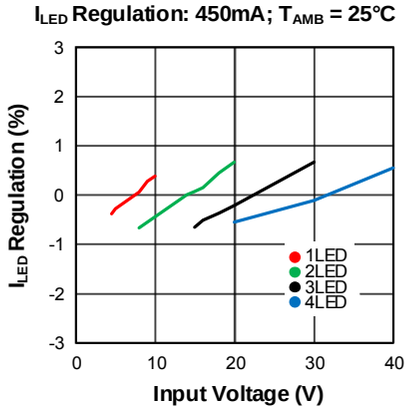

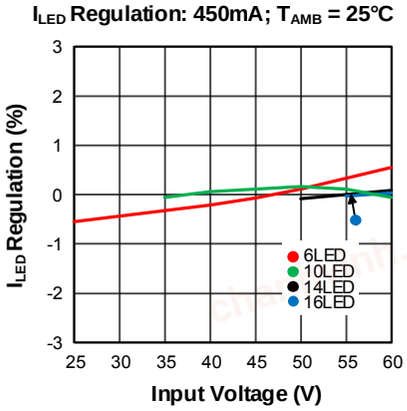

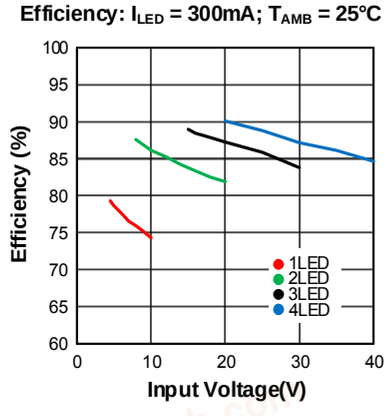

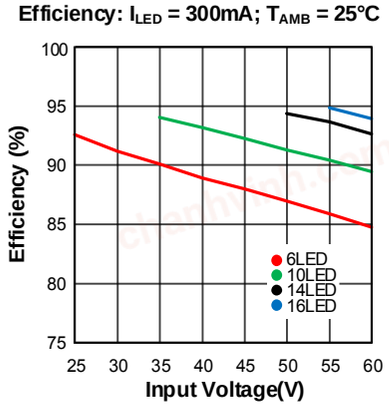

© May 2016

chanhvinh.com
more than you expect

WLMDU9456001JT / 172946001

MagI³C Power Module
LDHM - LED Step Down High Current Module

TYPICAL PERFORMANCE CURVES

If not otherwise specified, the following conditions apply: VIN = 48 V; CIN = 2.2 µF 100 V X7R ceramic capacitor for driving 5-13 power LEDs, I_{LED} = 350 mA; Single LED forward voltage used is 3.2 V; TAMB = 25 °C

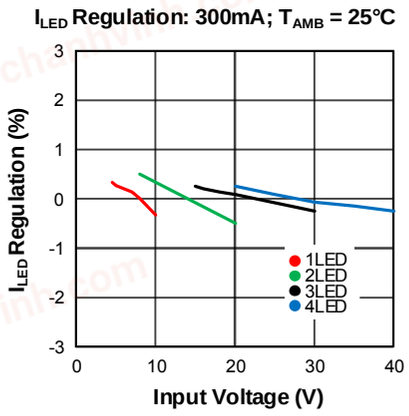

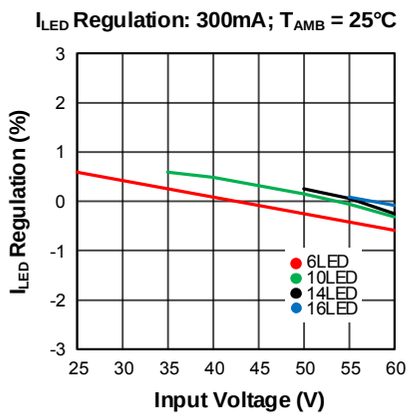

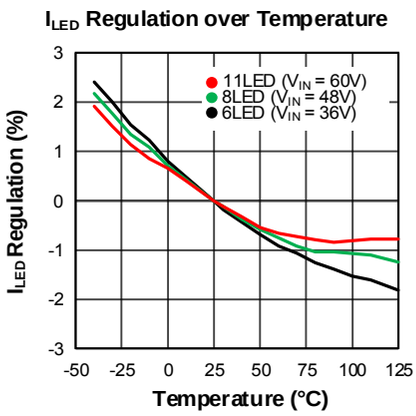

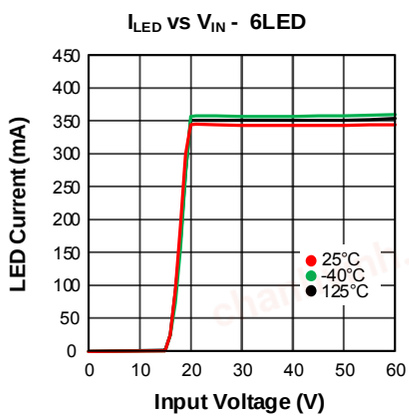

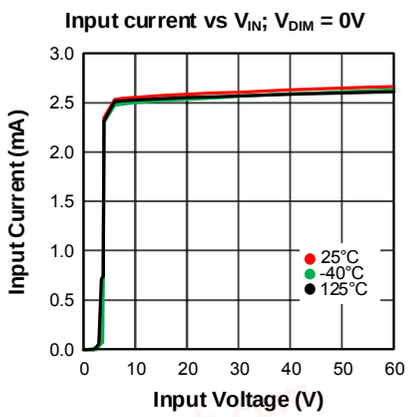

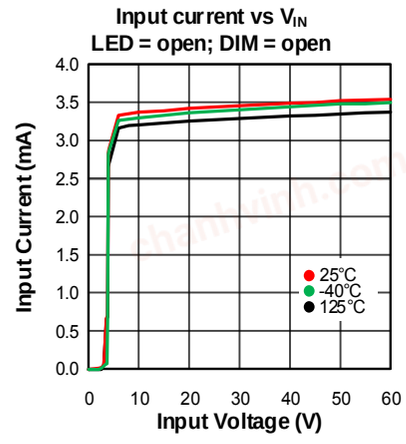

© May 2016

chanhvinh.com
more than you expect

WLMDU9456001JT / 172946001

MagI³C Power Module
LDHM - LED Step Down High Current Module

TYPICAL PERFORMANCE CURVES

If not otherwise specified, the following conditions apply: VIN = 48 V; CIN = 2.2 µF 100 V X7R ceramic capacitor for driving 5-13 power LEDs, I_{LED} = 350 mA; Single LED forward voltage used is 3.2 V; TAMB = 25 °C

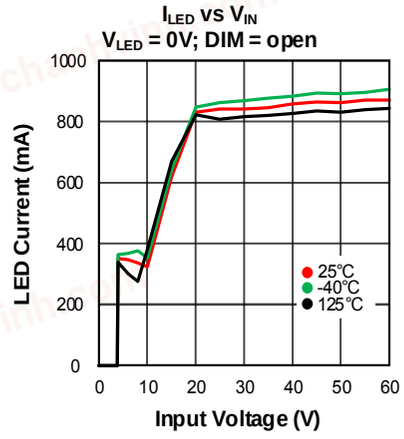

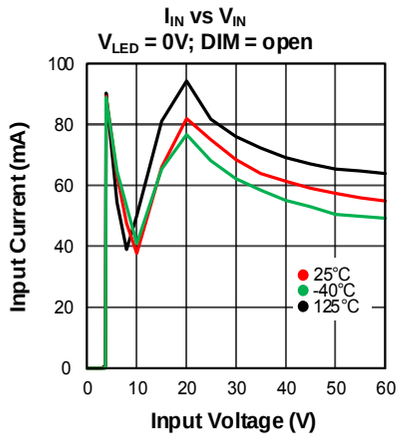

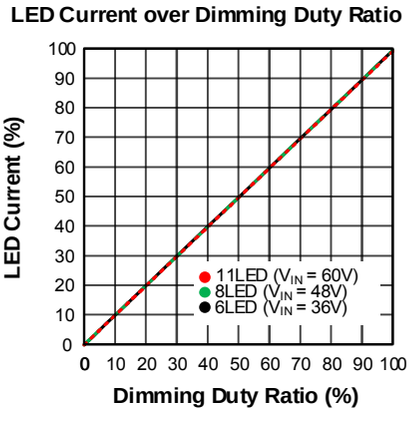

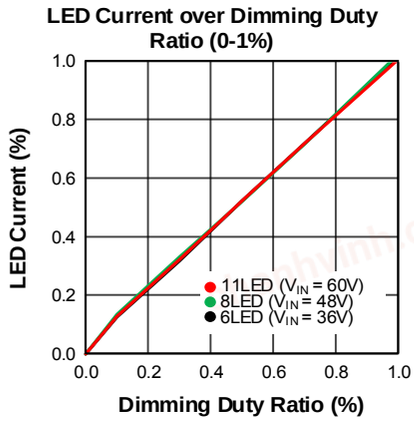

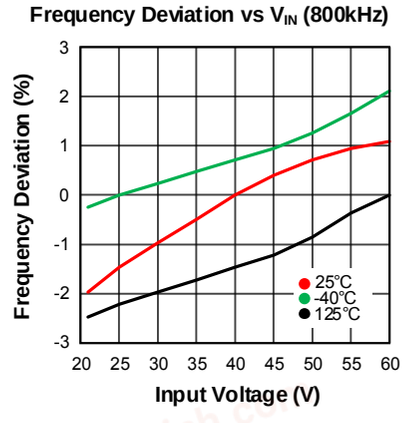

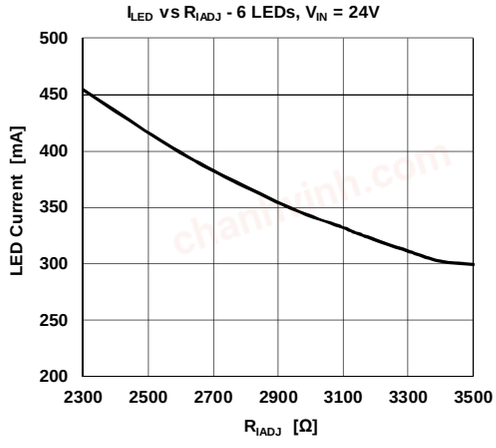

© May 2016

chanhvinh.com
more than you expect

WLMDU9456001JT / 172946001

MagI³C Power Module
LDHM - LED Step Down High Current Module

BLOCK DIAGRAM

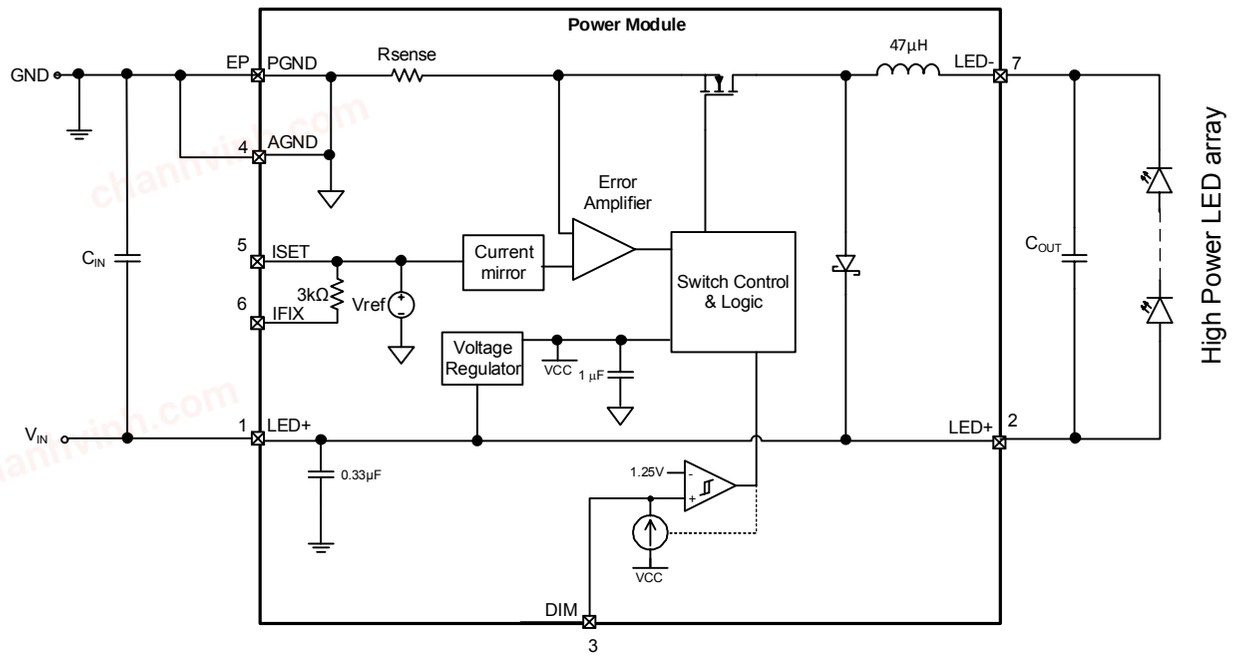

CIRCUIT DESCRIPTION

The MagI³C Power Module 172946001 is based on a non-synchronous **floating buck** regulator (simplified schematic below) with integrated MOSFET, integrated diode and a power inductor. Note that in a floating buck topology the load (LEDs) is not connected to GND. The control loop is based on a current mode control scheme with fixed switching frequency, assuring accurate constant current regulation and good EMI performance. High speed dimming is implemented by direct control of the PWM signal.

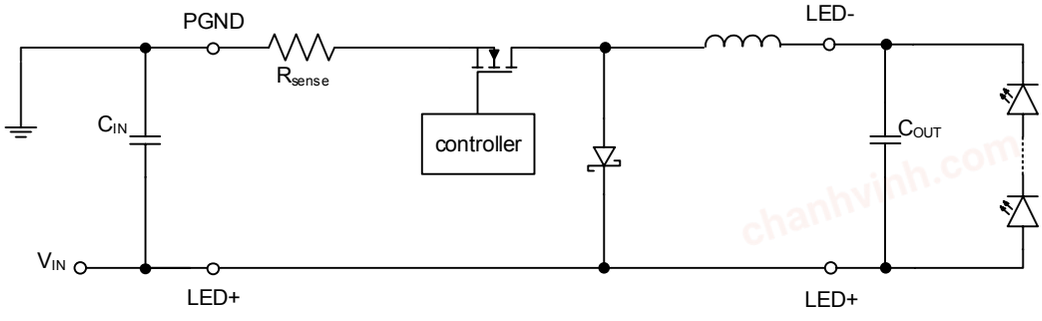

Floating buck

© May 2016

chanhvinh.com

WLMDU9456001JT / 172946001

MagI³C Power Module
LDHM - LED Step Down High Current Module

DESIGN FLOW

The next 4 simple steps will show how to select the external components to design your power application:

Essential Steps

1. **Set the LED driver module current**
2. **Select the appropriate number of LEDs**
3. **Layout and EMI considerations**

Optional Steps

4. **Dimming control**
5. **Parallel operation**

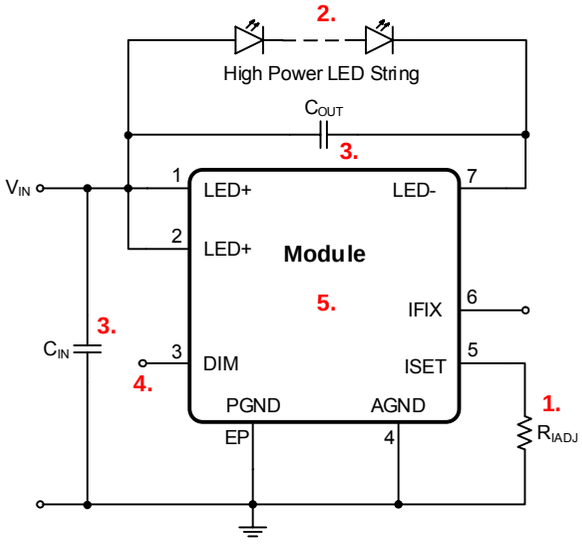

© May 2016

chanhvinh.com
more than you expect

WLMDU9456001JT / 172946001

MagI³C Power Module
LDHM - LED Step Down High Current Module

DESIGN FLOW

Step 1 Program the LED driver module current

The LED driver module requires no external current sensing resistor for LED current regulation. If the default LED current of 350mA is desired, no external resistor is necessary. It is enough to connect the IFIX pin to GND and to leave the ISET pin open, as shown in the picture below:

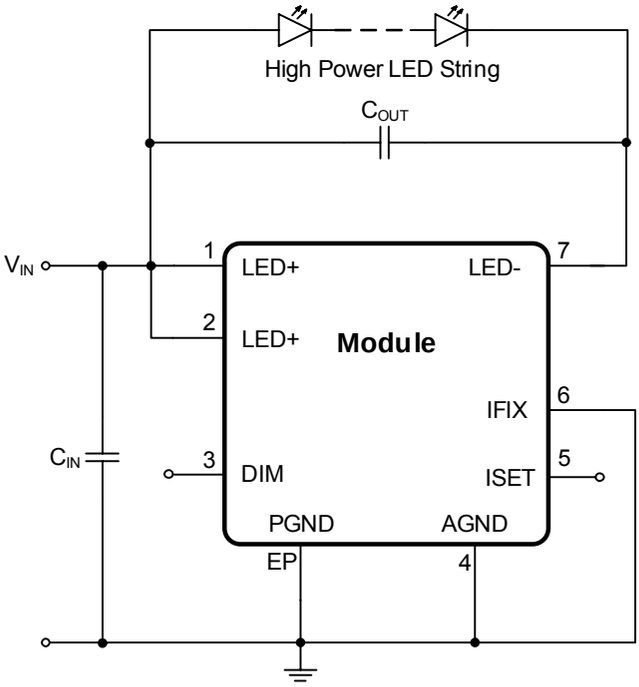

Setup for fixed 350mA LED current

If a different LED current is required, it can be adjusted from 300 mA to 450 mA by varying the value of the resistor R_{IADJ}, connected between ISET pin and GND, leaving the IFIX pin open, according to the following equation and as shown in the picture on the next page:

$$I_{LED} = \frac{V_{REF} \cdot k}{R_{IADJ}} = \frac{1{,}25V \cdot 840}{R_{IADJ}} \quad (1)$$

where V_{REF} is the internal voltage reference and k is the current mirror ratio between the LED current and the current flowing through R_{IADJ}. The factor k is fixed by design to 840.

© May 2016

chanhvinh.com

WLMDU9456001JT / 172946001

MagI³C Power Module
LDHM - LED Step Down High Current Module

DESIGN FLOW

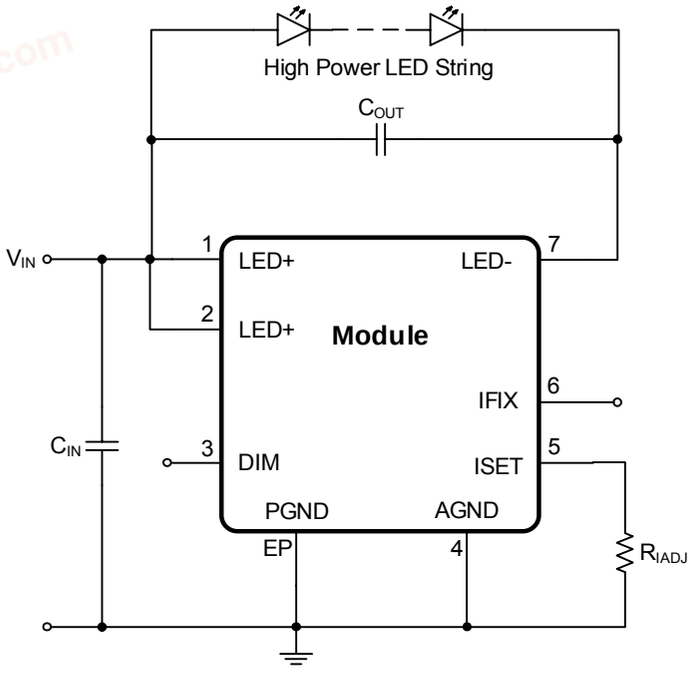

Setup for full adjustable LED current

According to equation (1) LED current values lower than 300mA can be also set. The minimum value of the LED current depends on the minimum current that keeps the device operating in CCM. This current is a function of the number of LEDs and the input voltage:

$$I_{LED,min_adj} = \frac{(V_{IN} - V_{LED}) \cdot V_{LED}}{2 \cdot L \cdot f_{SW} \cdot V_{IN}} \quad (2)$$

© May 2016

WLMDU9456001JT / 172946001

MagI³C Power Module
LDHM - LED Step Down High Current Module

DESIGN FLOW

The picture below shows the minimum adjustable LED current according to the number of LEDs (forward voltage assumed 3,2V) and the input voltage.

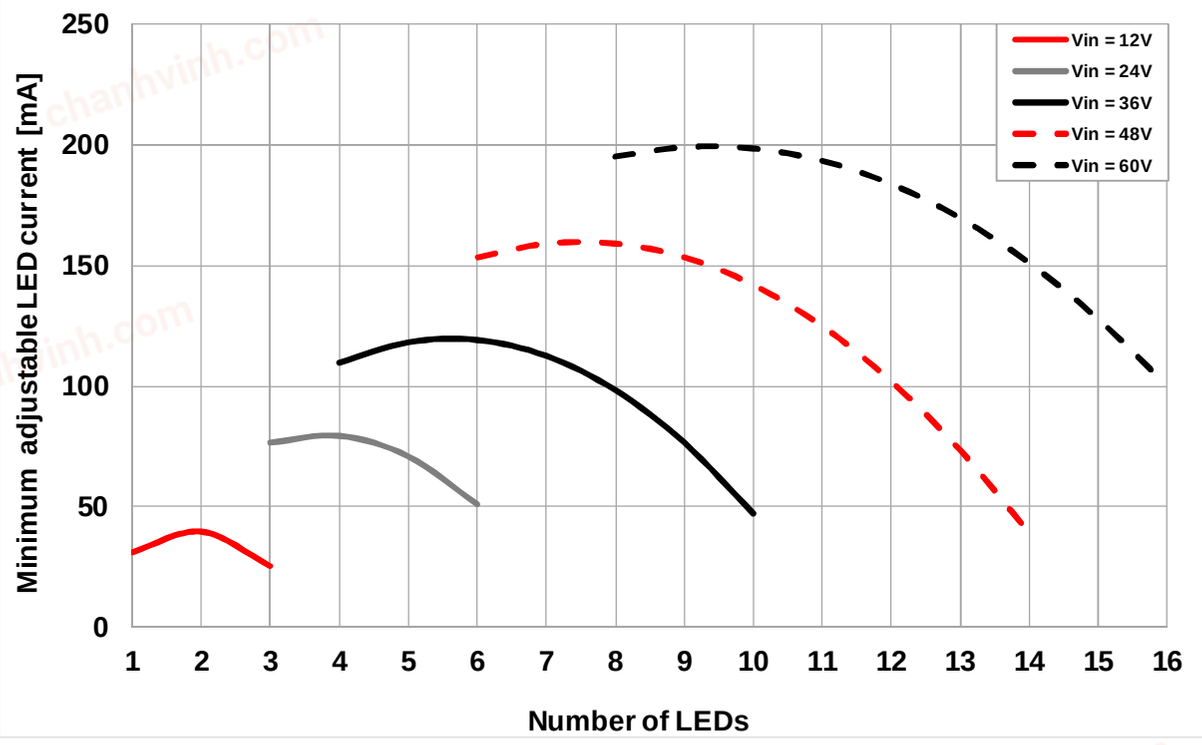

Maximum Switch Current Limit

The LED Driver Module features an integrated switch current limiting mechanism to prevent the LEDs from being overdriven. The switch current limiter is triggered when the switch current is three times exceeding the current level set by the resistor. Once the current limiter is triggered, the internal power switch turns OFF for 3.6 µs to demagnetize the inductor until inductor current reduces back to normal level. The current limiting feature is exceptionally important to avoid permanent damage of the LED driver module application circuit due to short circuit of the LED string.

Step 2 Select the appropriate number of LEDs

The on-time of the internal switch should not be shorter than 400 ns. The number of LEDs (typical forward voltage at 3.2 V) to input voltage is constrained by that as shown in the following table.

No. of LED	1	2	3	4	5	6-16
Max. V_{IN} (V)	12	20	30	40	50	60

© May 2016

WLMDU9456001JT / 172946001

MagI³C Power Module
LDHM - LED Step Down High Current Module

DESIGN FLOW

Step 3 Layout and EMI considerations

The overall performance of the LED driver module highly depends on the PCB layout. Poor board layout can disrupt the performance of the LED driver module and surrounding circuitry by contributing to EMI, ground bounce and resistive voltage drop in the traces. These can send incorrect signals to the LED driver module resulting in poor regulation and stability. Good layout can be implemented by following a few simple design rules.

- Place C_{IN} as close as possible to the LED+ pin (pin 1 + pin 2) and PGND exposed pad (EP).

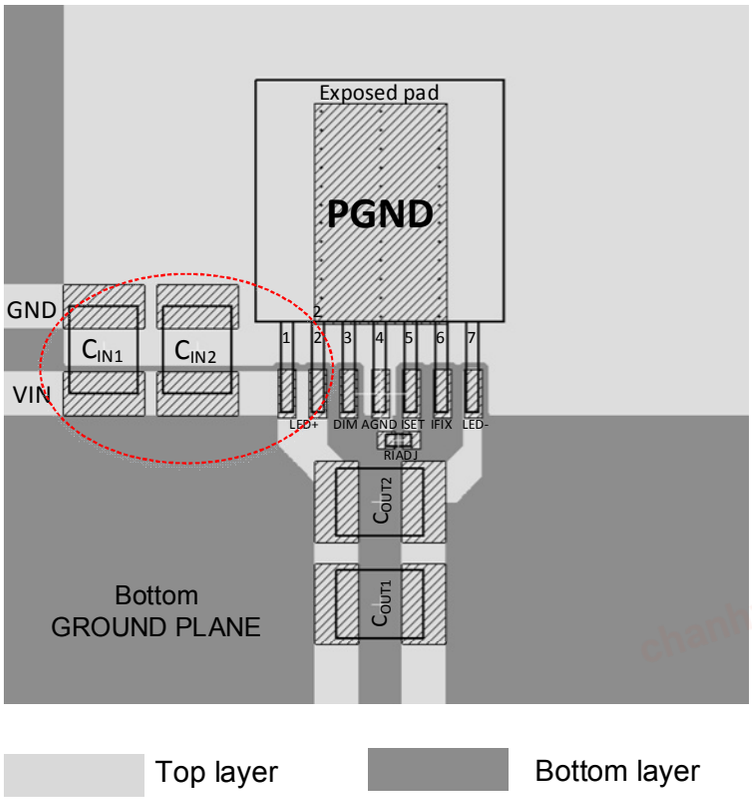

© May 2016

chanhvinh.com

WLMDU9456001JT / 172946001

MagI³C Power Module
LDHM - LED Step Down High Current Module

DESIGN FLOW

- Place C_{OUT} (for reduction of LED current ripple and EMI compliance) as close as possible to the LED+ pin (pin 1+pin 2) and LED- pin (pin 7).

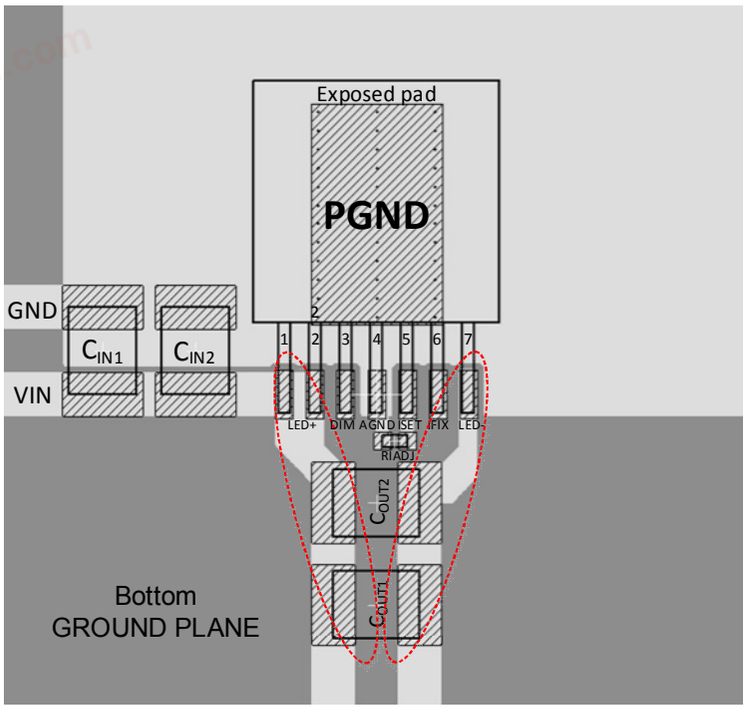

© May 2016

WLMDU9456001JT / 172946001

MagI³C Power Module
LDHM - LED Step Down High Current Module

- PGND exposed pad (EP) must be connected to the AGND pin (pin 4) directly.

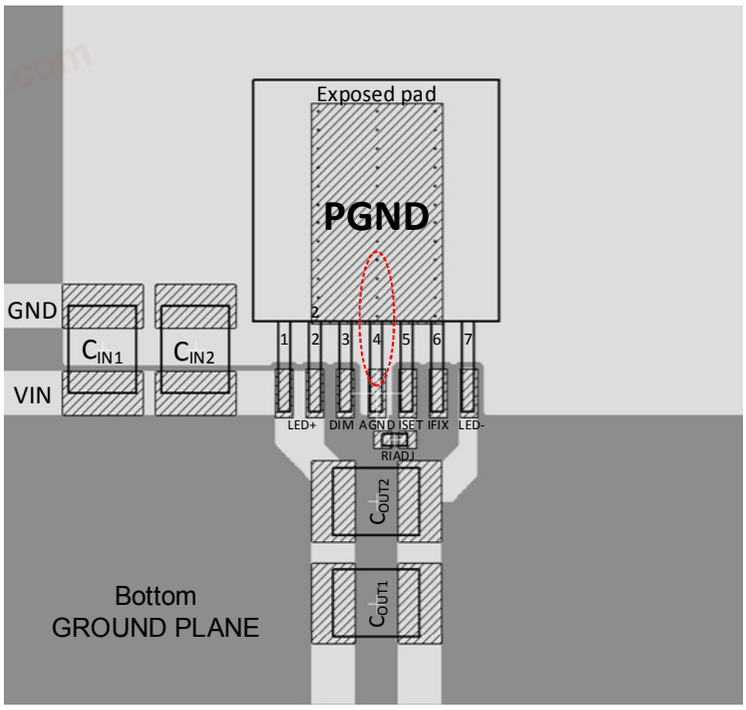

From an EMI reduction standpoint, it is imperative to minimize the di/dt current paths (refer to LED driver module current loops). Therefore, it is recommended to connect an 2.2 µF capacitor (C_{OUT}) across the LED+ pin and LED- pin. This will minimize the ripple current so that it can reduce radiated EMI.

LED driver module current loops

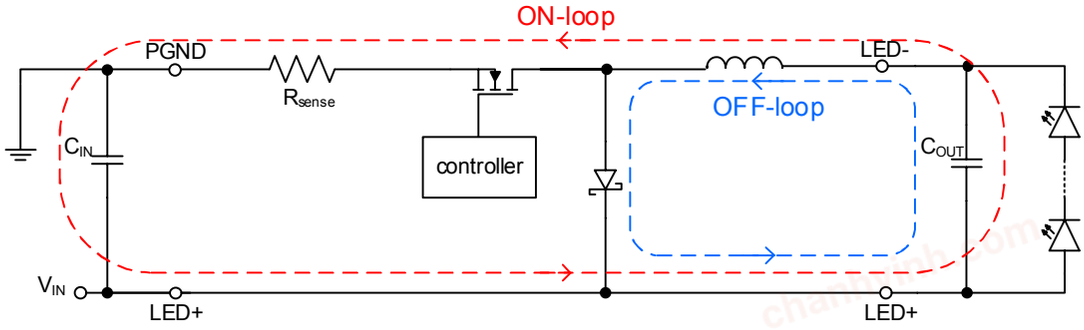

© May 2016

WLMDU9456001JT / 172946001

MagI³C Power Module
LDHM - LED Step Down High Current Module

The 172946001 could work properly also without any C_{OUT}. In this case the inductor ripple will be added to the LED current, as shown in the picture below.

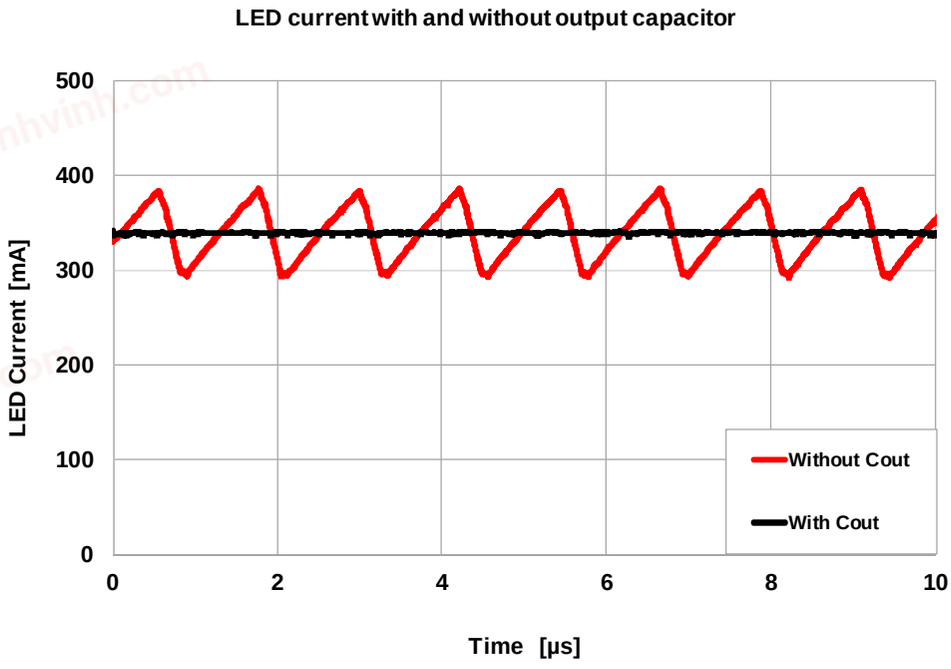

Considering the frequency range of the ripple oscillations (800kHz), it does not lead to any visible flickering of the emitted light. Nevertheless the presence of a certain ripple in the LED current increases the LED junction temperature. This accelerates the aging of the LED and reduces its lifetime. Higher LED temperature causes the efficiency of the LED to drop. In addition, electromagnetic emissions are increased due to the presence of the current ripple along the complete LED string and connection wires.
Therefore a small MLCC output capacitor of 2,2µF is anyway recommended.

© May 2016

chanhvinh.com

WLMDU9456001JT / 172946001

MagI³C Power Module
LDHM - LED Step Down High Current Module

Step 4 Dimming Control

Two ways to implement the LED dimming are offered: the analog dimming and the PWM dimming. Both methods control the average current flowing through the LEDs.

Analog dimming
The analog dimming can be achieved adjusting the LED current by using an external voltage source (V_{ADIM}), as shown in the schematic below:

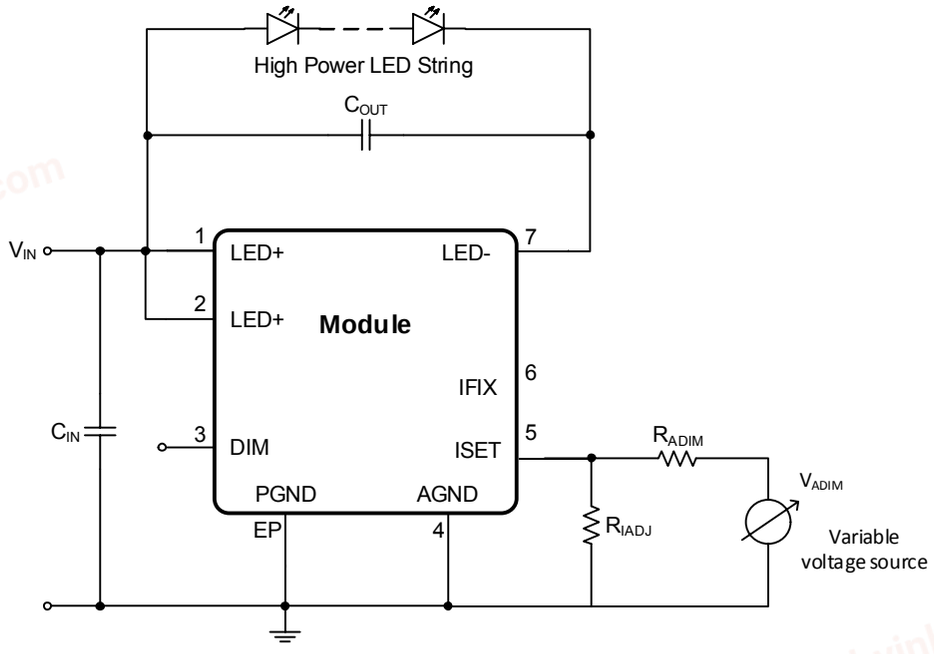

The LED current can be adjusted from I_{LEDmax} to I_{LEDmin} by selecting the resistor R_{IADJ} and R_{ADIM}, as described by the following equations:

$$R_{ADIM} = \frac{V_{ADIM} \cdot k}{I_{LED,max} - I_{LED,min}} \quad (3)$$

$$R_{IADJ} = \frac{V_{ADIM} \cdot V_{REF} \cdot k}{V_{ADIM} \cdot I_{LED,max} - V_{REF} \cdot (I_{LED,max} - I_{LED,min})} \quad (4)$$

where V_{REF} = 1.25V and k is the current mirror ratio (internally set to 840).

© May 2016

WLMDU9456001JT / 172946001

MagI³C Power Module
LDHM - LED Step Down High Current Module

Example. In the following table two possible external voltage sources and the required resistors are shown. In both cases a LED current from 300mA to 450mA can be adjusted

V_{ADIM} range [V]	R_{ADIM} [kΩ]	R_{IADJ} [kΩ]
0 to 3.3	18.48 (18.7 closest value 1% series)	2.67
0 to 5	28.00	2.55

The picture below shows how the LED current varies according to the analog dimming voltage, using the above mentioned resistors.

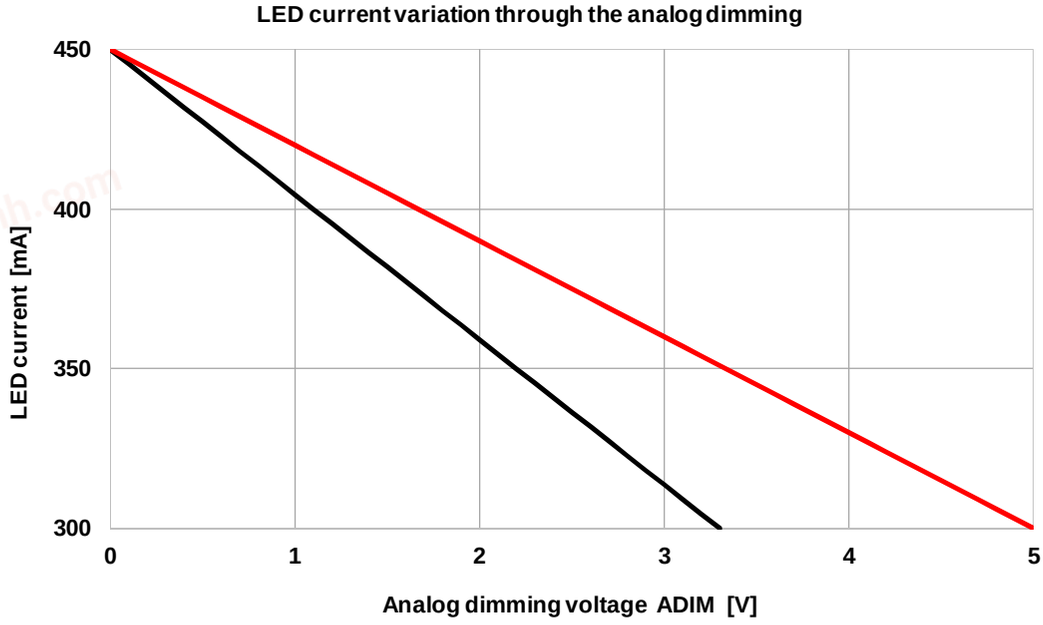

Since the color temperature of the LED depends on the current flowing through the LED, the analog dimming does not allow to keep constant the color of the emitted light. For applications where the color of the emitted light plays a crucial role, a PWM (following section) is strongly recommended.

© May 2016

WLMDU9456001JT / 172946001

MagI³C Power Module
LDHM - LED Step Down High Current Module

PWM Dimming

Controlling the brightness of the LED emitted light while keeping the same color can be achieved by properly driving the LED. A well-known limitation of the human eye is not to distinguish light flickering with frequency above 100-120Hz. The idea of the PWM dimming of LEDs means simply switching on and off the LED above this frequency. The human eye will perceive the color corresponding to the current flowing through the LED during the switch-on phase. It will implement a kind of integration of the perceived brightness, corresponding to the average current flowing through the LED, as described in the picture below:

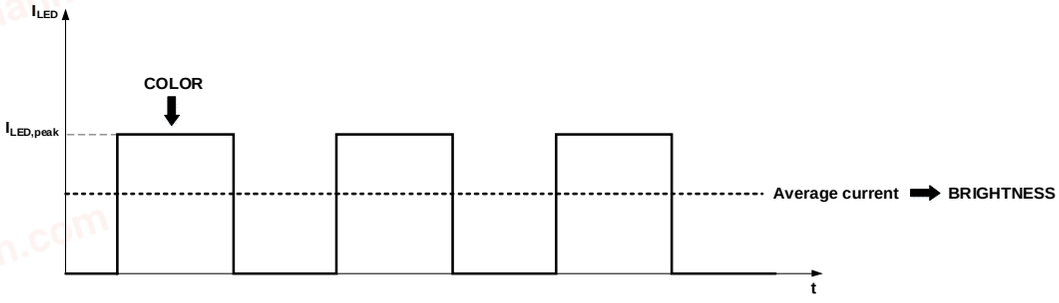

The 172946001 offers the possibility to implement a PWM dimming by using the dedicated pin DIM.
The DIM pin of the LED driver module is an input with internal pull-up that accepts logic signals for average LED current control. Applying a logic high (above 1.3 V) signal to the DIM pin or leaving the DIM pin open will enable the device. Applying a logic low signal (below 0.7 V) to the DIM pin will disable the switching activity of the device but maintain the operation of the internal voltage regulator (VCC).

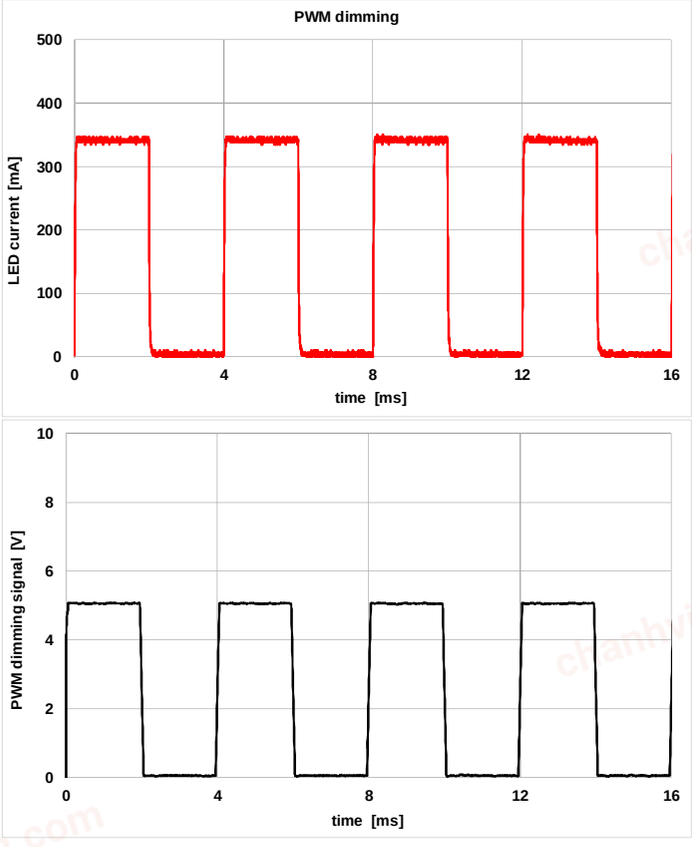

Example with PWM dimming frequency of 250Hz

© May 2016

WLMDU9456001JT / 172946001

MagI³C Power Module
LDHM - LED Step Down High Current Module

The maximum frequency of the PWM dimming signal ($f_{DIM,max}$) should not exceed, as rule of thumb,1/10 of the switching frequency:

$$f_{SW} = 800\text{kHz} \Rightarrow f_{DIM,max} = 80\text{kHz} \quad (5)$$

The minimum dimming on-time pulse (t_{DIM,on_min}) is around 16µs. The frequency of the dimming signal must be adjusted according to the required dimming contrast ratio (CR). The contrast ratio is defined as the number of steps between the minimum (dark) and maximum (full light) brightness of a lighting source.

The higher the CR, the lower is the frequency, as described by the equation below:

$$f_{DIM,max} = \frac{1}{t_{DIM,on_min} \cdot CR} \quad (6)$$

Example 1. If a PWM signal is generated by a 8 bit timer of a microcontroller, 256 different steps are available (the achievable contrast ratio would be 256:1). According to the equation (6), the following dimming frequency is calculated:

$$f_{DIM} = \frac{1}{16\mu s \cdot 256} = 244\text{Hz} \quad (7)$$

A PWM dimming frequency of 250Hz can be used. Varying the duty cycle of the PWM signal, 256 different level of brightness of the LEDs can be achieved, as shown in the picture below:

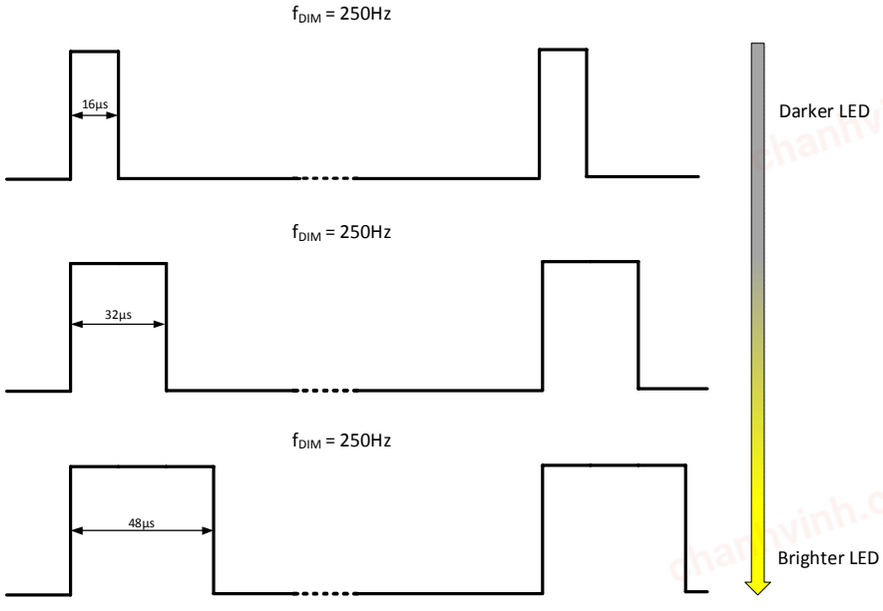

© May 2016

chanhvinh.com

WLMDU9456001JT / 172946001

MagI³C Power Module
LDHM - LED Step Down High Current Module

Example 2. Assuming to keep the on-time of the PWM signal always equal to the t_{DIM,on_min}, varying the frequency of the PWM signal (PFM LED brightness control), the LED brightness can be adjusted as well as different contrast ratios can be achieved (see picture below):

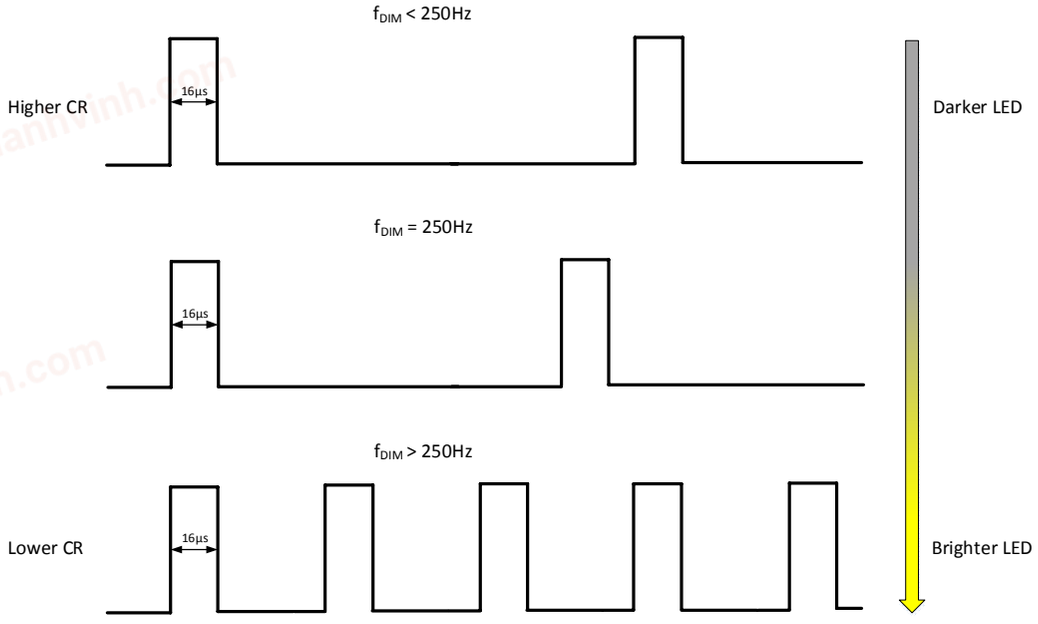

The constant duration of the LED on-time limits the LED junction temperature increase during dimming. As consequence, the efficiency of this brightness control is higher compared to the PWM control.

© May 2016

chanhvinh.com

WLMDU9456001JT / 172946001

MagI³C Power Module
LDHM - LED Step Down High Current Module

Example 3. The schematic below shows a possible combination of analog and PWM dimming in order to set the color temperature of the emitted light and, at the same time, to adjust the brightness.

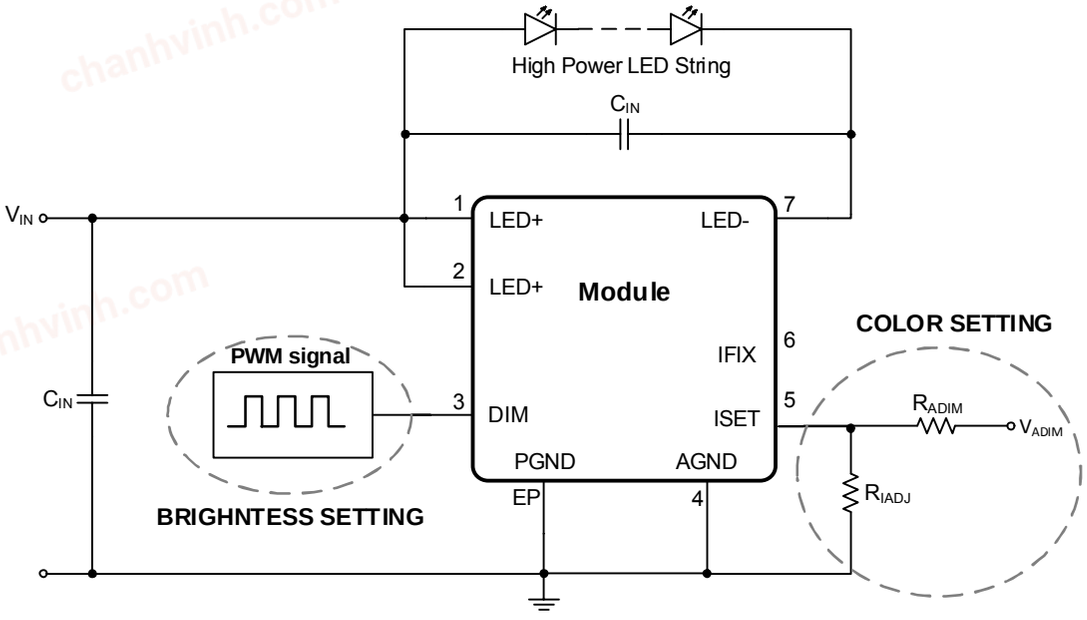

© May 2016

WLMDU9456001JT / 172946001

MagI³C Power Module
LDHM - LED Step Down High Current Module

Step 5 Parallel operation

When a load current higher than 450 mA is required by the application, LED driver modules can be used in parallel to deliver higher current. With common V_{IN} and GND pins, each LED driver module will operate as independent asynchronous current source driving the same current. The total DC current of the modules will be additive; however, low frequency sub-harmonic current ripple may be present and its frequency and magnitude will depend upon the phase relationship between the internal clocks as there is no possibility for synchronizing driver clocks. Current sharing modules should have a local C_{IN} capacitor of minimum 2.2 µF located as close to V_{IN} and GND as possible.

Parallel operation circuit schematic

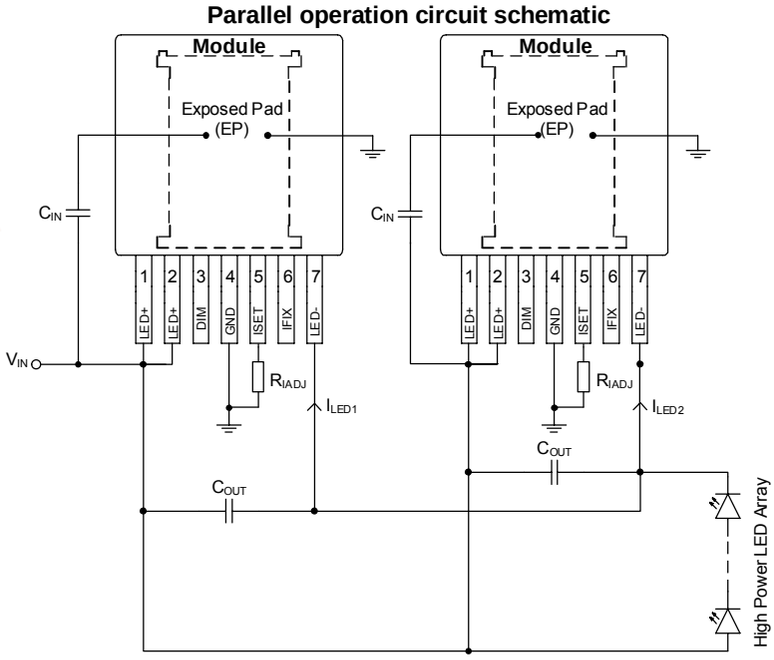

Parallel operation result; I_{LED} = 900mA

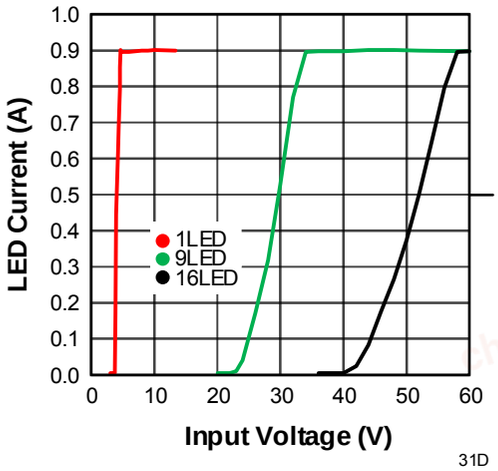

© May 2016

WLMDU9456001JT / 172946001

MagI³C Power Module
LDHM - LED Step Down High Current Module

PROTECTIVE FEATURES

Shorted LED protection

Example

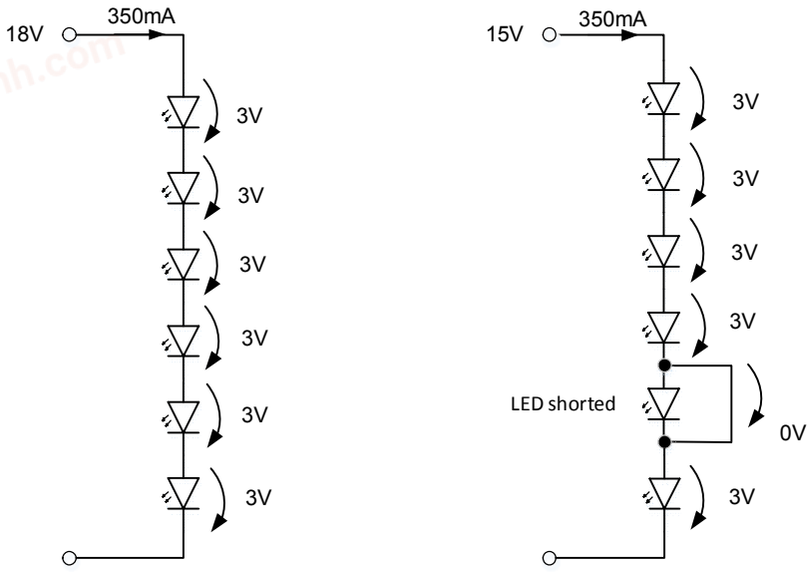

In case of a short circuit of one or more LEDs, the loop will react in order to adapt the voltage across the LED string, as shown in the picture below.

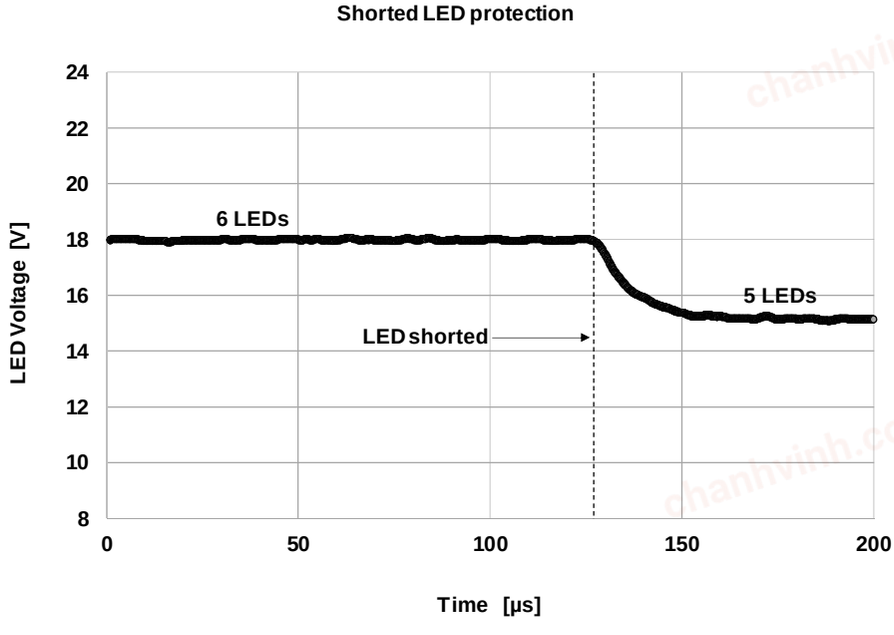

© May 2016

WLMDU9456001JT / 172946001

MagI³C Power Module
LDHM - LED Step Down High Current Module

Similarly, in case the LED is only temporary shorted and then again normally working, the voltage across the LED string will be adapted accordingly. In any case the current through the LED string is not affected, keeping the programmed value.

Open LED behavior

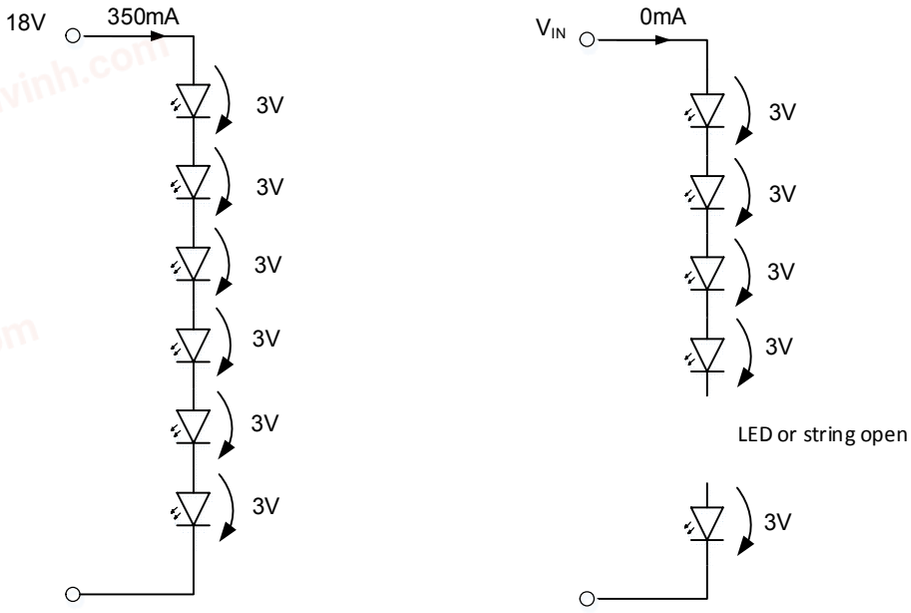

When a LED becomes an open circuit or simply the LED string is disconnected by the LED driver, the current stops flowing through the LED string. As consequence the control loop will set the voltage between LED+ and LED- to the input voltage (V_{IN}), as shown below:

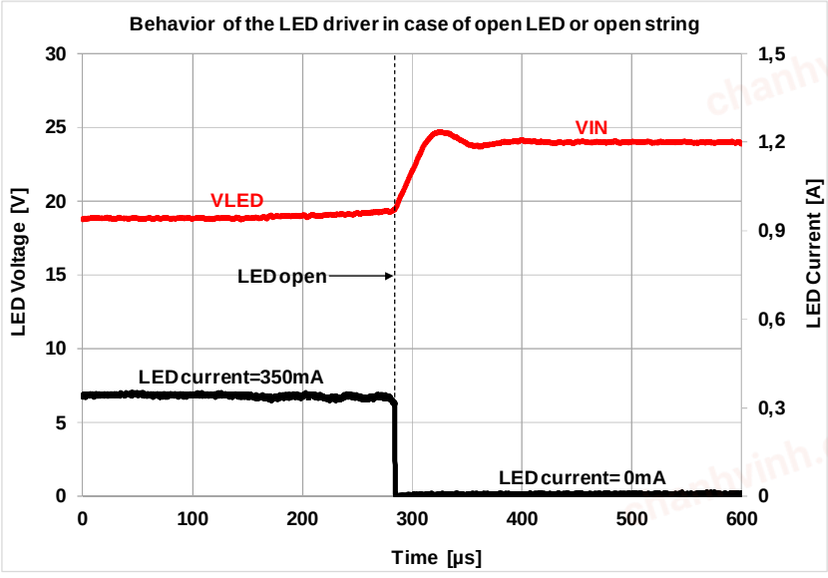

Monitoring the LED string voltage by an external microcontroller allows the detection of defective strings.

© May 2016

chanhvinh.com

WLMDU9456001JT / 172946001

MagI³C Power Module
LDHM - LED Step Down High Current Module

APPLICATIONS

The MagI³C LED driver module for constant current is easy-to-use for current solutions capable of driving up to a 450 mA load with exceptional power conversion efficiency. They are available in an innovative package that enhances thermal performance and allows for hand or machine soldering. Following application circuits show possible operating configurations.

Application Circuit

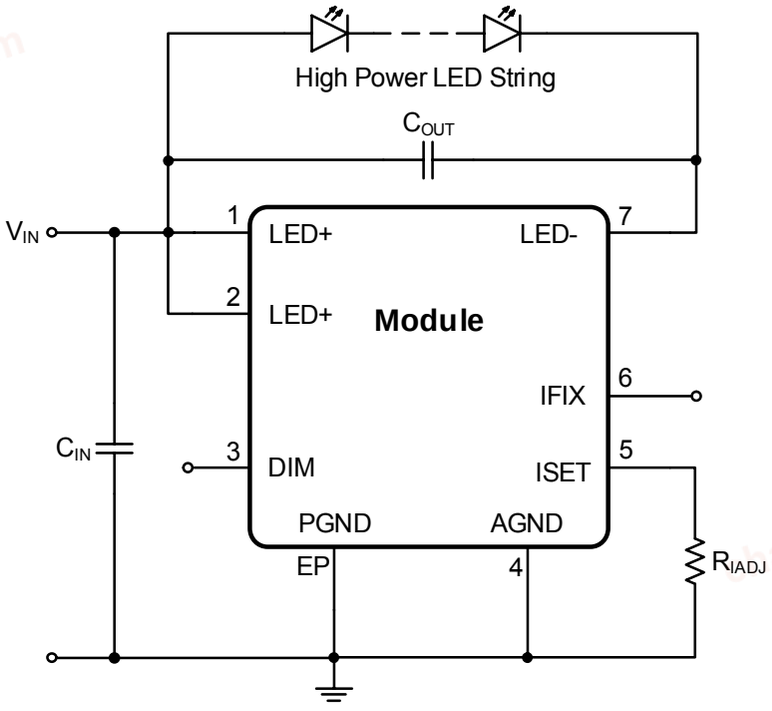

In the table below the recommended component values, under the following conditions: TA = 25°C; VIN = up to 60V; up to 16 LEDs.

I_{LED}	300mA	350mA	450mA
R_{IADJ}	3.5kΩ	Not connected	2.33kΩ
IFIX pin	open	to GND	open
C_{IN}	2.2 µF ; 100 V ; X7R		
C_{OUT}	2.2 µF ; 100 V ; X7R		

© May 2016

WLMDU9456001JT / 172946001

MagI³C Power Module
LDHM - LED Step Down High Current Module

HANDLING RECOMMENDATIONS

1. The power module is classified as MSL3 (JEDEC Moisture Sensitivity Level 3) and requires special handling due to moisture sensitivity (JEDEC J-STD033).
2. The parts are delivered in a sealed bag (Moisture Barrier Bags = MBB) and should be processed within one year.
3. When opening the moisture barrier bag check the Humidity Indicator Card (HIC) for color status. Bake parts prior to soldering in case indicator color has changed according to the notes on the card .
4. Parts must be processed after 168 hour (7 days) of floor life. Once this time has been exceeded, bake parts prior to soldering per JEDEC J-STD033 recommendation.

SOLDER PROFILE

1. Only Pb-Free assembly is recommended according to JEDEC J-STD020.
2. Measure the peak reflow temperature of the MagI³C power module in the middle of the top view.
3. Ensure that the peak reflow temperature does not exceed 240°C ±5°C as per JEDEC J-STD020.
4. The reflow time period during peak temperature of 240°C ±5°C must not exceed 20 seconds.
5. Reflow time above liquidus (217°C) must not exceed 60 seconds.
6. Maximum ramp up is rate 3°C per second
7. Maximum ramp down rate is 6°C per second
8. Reflow time from room (25°C) to peak must not exceed 8 minutes as per JEDEC J-STD020.
9. **Maximum numbers of reflow cycles is two**.
10. **For minimum risk, solder the module in the last reflow cycle of the PCB production.**
11. For soldering process please consider lead material copper (Cu) and lead finish tin (Sn).
12. For solder paste use a standard SAC Alloy such as SAC 305, type 3 or higher.
13. Below profile is valid for convection reflow only
14. Other soldering methods (e.g.vapor phase) are not verified and have to be validated by the customer on his own risk

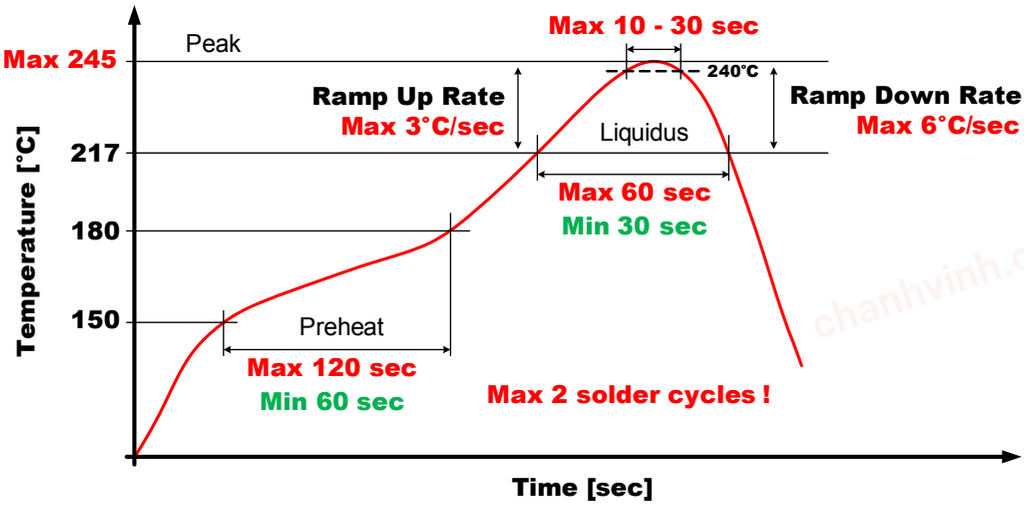

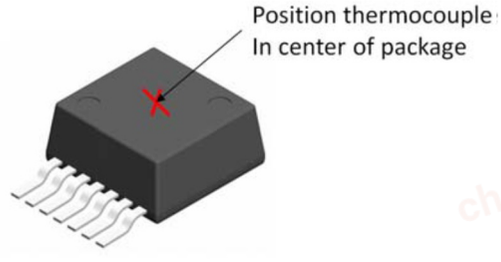

© May 2016

chanhvinh.com

WLMDU9456001JT / 172946001

MagI³C Power Module
LDHM - LED Step Down High Current Module

PHYSICAL DIMENSIONS (mm)

Package Type: TO263-7

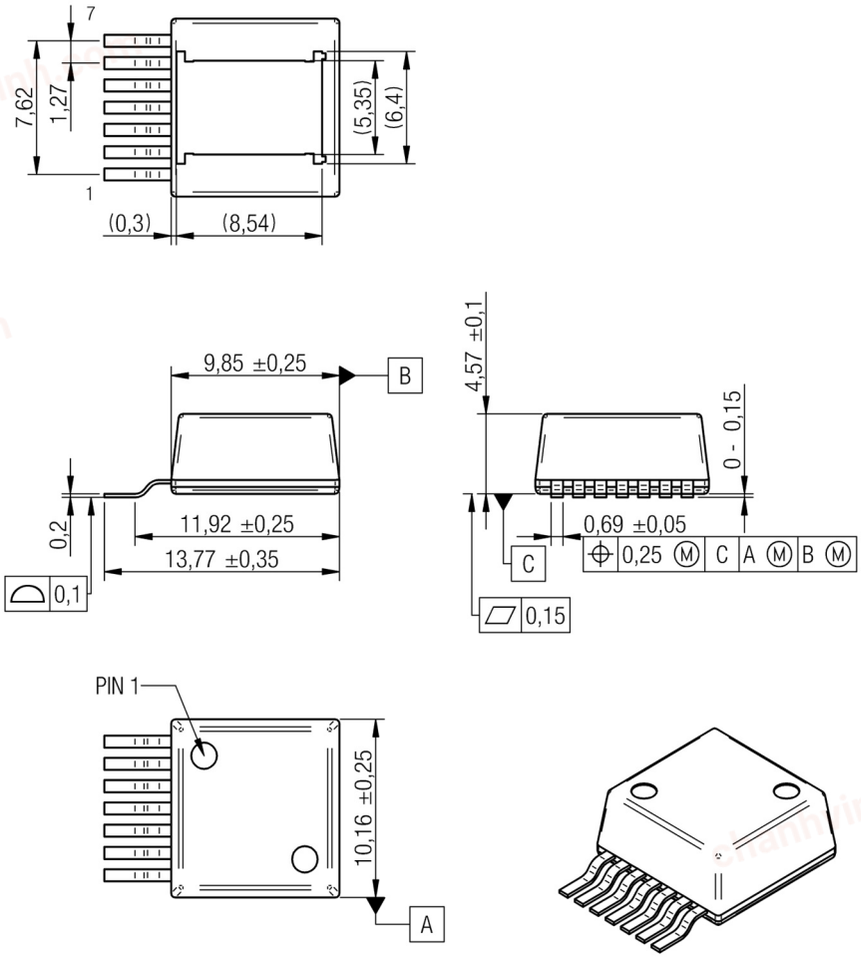

© May 2016

chanhvinh.com

WLMDU9456001JT / 172946001

MagI³C Power Module

LDHM - LED Step Down High Current Module

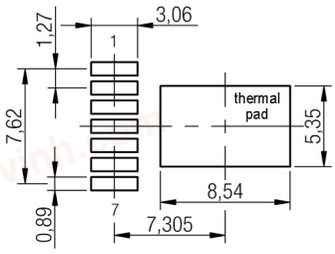

recommended soldering pad

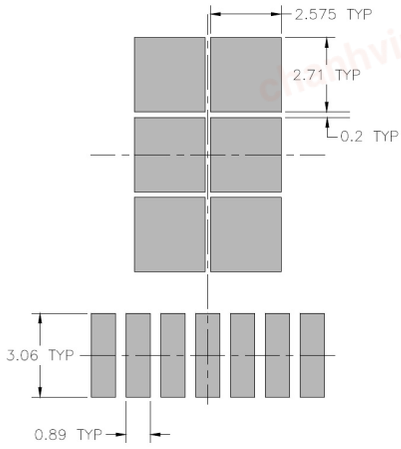

recommended stencil design
solder paste recommendation 150µm

© May 2016

chanhvinh.com

WLMDU9456001JT / 172946001

MagI³C Power Module
LDHM - LED Step Down High Current Module

PACKAGING

Reel (mm)

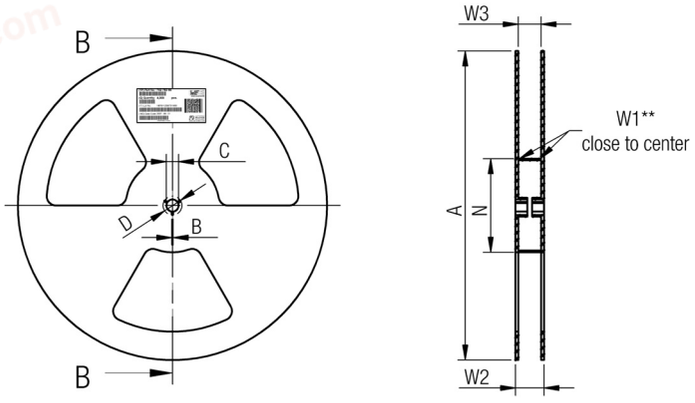

		A	B	C	D	N	W1	W2	W3	W3
tolerance		± 2,0	min.	± 0,8	min.	± 2,0	+ 2	max.	min.	max.
Tape width	**24mm**	330,00	1,50	13,00	20,20	60,00	24,40	30,40	23,90	27,40

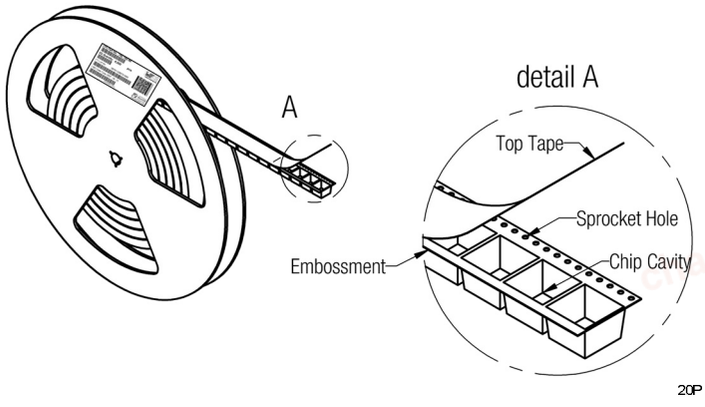

© May 2016

chanhvinh.com
more than you expect

WLMDU9456001JT / 172946001

MagI³C Power Module
LDHM - LED Step Down High Current Module

Tape (mm)

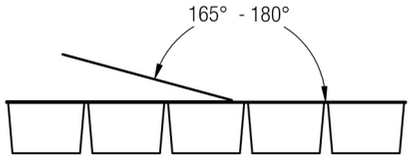

		Pull-of force
Tape width	**24 mm**	0,1 N - 1,3 N

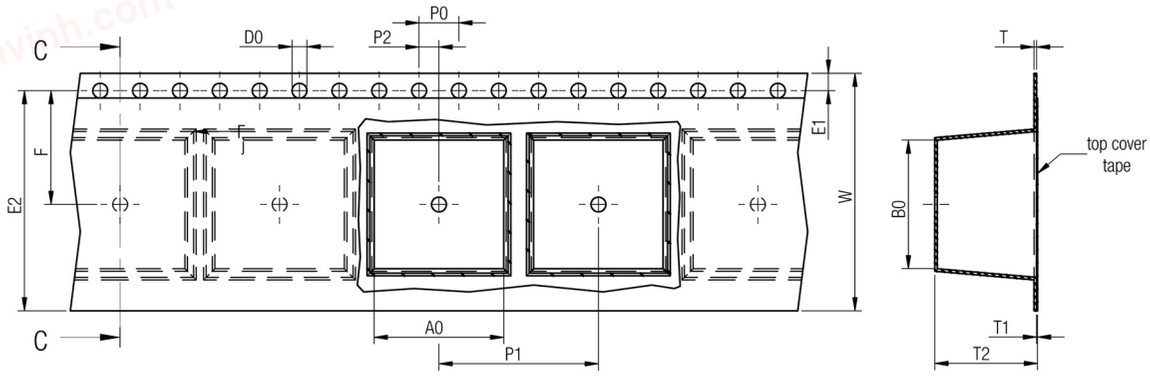

		A0	B0	W	P1	T	T1	T2	D0	E1	E2	F	P0	P2	Tape	VPE / packaging unit
tolerance		typ.	typ.	+0,3 -0,1	± 0,1	± 0,1	max.	typ.	+0,3 -0,1	± 0,1	min.	± 0,05	± 0,1	± 0,05		
size	TO263-7EP	10,60	14,22	24,00	16,00	0,50	0,10	5,00	1,50	1,75	22,25	11,50	4,00	2,00	Polystyrene	250

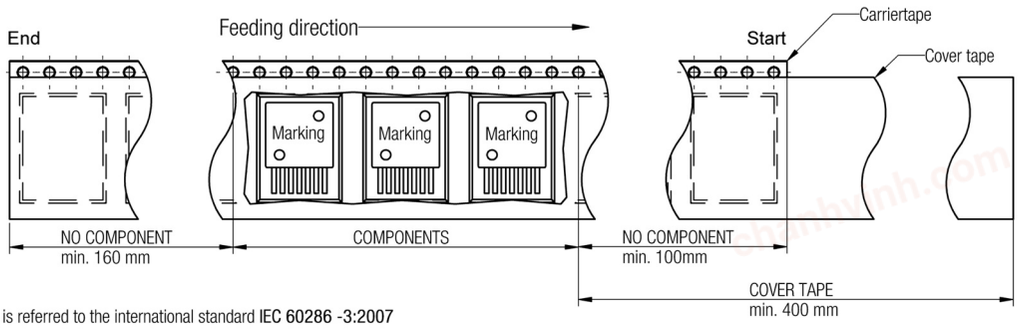

Packaging is referred to the international standard IEC 60286 -3:2007

© May 2016

chanhvinh.com

WLMDU9456001JT / 172946001

MagI³C Power Module
LDHM - LED Step Down High Current Module

DOCUMENT HISTORY

Revision	Date	Description	Comment
1.0	May 2016	Release of final version	

CAUTIONS AND WARNINGS

The following conditions apply to all goods within the product series of MagI³C of Würth Elektronik eiSos GmbH & Co. KG:

General:
All recommendations according to the general technical specifications of the data-sheet have to be complied with.

The usage and operation of the product within ambient conditions which probably alloy or harm the component surface has to be avoided.

The responsibility for the applicability of customer specific products and use in a particular customer design is always within the authority of the customer. All technical specifications for standard products do also apply for customer specific products.

Residual washing varnish agent that is used during the production to clean the application might change the characteristics of the body, pins or termination. The washing varnish agent could have a negative effect on the long term function of the product.
Direct mechanical impact to the product shall be prevented as the material of the body, pins or termination could flake or in the worst case it could break. As these devices are sensitive to electrostatic discharge customer shall follow proper IC Handling Procedures.

Customer acknowledges and agrees that it is solely responsible for compliance with all legal, regulatory and safety-related requirements concerning its products, and any use of Würth Elektronik eiSos GmbH & Co. KG components in its applications, notwithstanding any applications-related information or support that may be provided by Würth Elektronik eiSos GmbH & Co. KG. Customer represents and agrees that it has all the necessary expertise to create and implement safeguards which anticipate dangerous consequences of failures, monitor failures and their consequences lessen the likelihood of failures that might cause harm and take appropriate remedial actions. Customer will fully indemnify Würth Elektronik eiSos and its representatives against any damages arising out of the use of any Würth Elektronik eiSos GmbH & Co. KG components in safety-critical applications.

Product specific:
Follow all instructions mentioned in the datasheet, especially:
- The solder profile has to comply with the technical reflow or wave soldering specification, otherwise this will void the warranty.
- All products are supposed to be used before the end of the period of 12 months based on the product date-code.
- Violation of the technical product specifications such as exceeding the absolute maximum ratings will void the warranty.
- It is also recommended to return the body to the original moisture proof bag and reseal the moisture proof bag again.
- ESD prevention methods need to be followed for manual handling and processing by machinery.

© May 2016

WLMDU9456001JT / 172946001

MagI³C Power Module
LDHM - LED Step Down High Current Module

IMPORTANT NOTES

The following conditions apply to all goods within the product range of Würth Elektronik eiSos GmbH & Co. KG:

1. General Customer Responsibility
Some goods within the product range of Würth Elektronik eiSos GmbH & Co. KG contain statements regarding general suitability for certain application areas. These statements about suitability are based on our knowledge and experience of typical requirements concerning the areas, serve as general guidance and cannot be estimated as binding statements about the suitability for a customer application. The responsibility for the applicability and use in a particular customer design is always solely within the authority of the customer. Due to this fact it is up to the customer to evaluate, where appropriate to investigate and decide whether the device with the specific product characteristics described in the product specification is valid and suitable for the respective customer application or not. Accordingly, the customer is cautioned to verify that the datasheet is current before placing orders.

2. Customer Responsibility related to Specific, in particular Safety-Relevant Applications
It has to be clearly pointed out that the possibility of a malfunction of electronic components or failure before the end of the usual lifetime cannot be completely eliminated in the current state of the art, even if the products are operated within the range of the specifications. In certain customer applications requiring a very high level of safety and especially in customer applications in which the malfunction or failure of an electronic component could endanger human life or health it must be ensured by most advanced technological aid of suitable design of the customer application that no injury or damage is caused to third parties in the event of malfunction or failure of an electronic component.

3. Best Care and Attention
Any product-specific notes, warnings and cautions must be strictly observed.

4. Customer Support for Product Specifications
Some products within the product range may contain substances which are subject to restrictions in certain jurisdictions in order to serve specific technical requirements. Necessary information is available on request. In this case the field sales engineer or the internal sales person in charge should be contacted who will be happy to support in this matter.

5. Product R&D
Due to constant product improvement product specifications may change from time to time. As a standard reporting procedure of the Product Change Notification (PCN) according to the JEDEC-Standard we inform about minor and major changes. In case of further queries regarding the PCN, the field sales engineer or the internal sales person in charge should be contacted. The basic responsibility of the customer as per Section 1 and 2 remains unaffected.

6. Product Life Cycle
Due to technical progress and economical evaluation we also reserve the right to discontinue production and delivery of products. As a standard reporting procedure of the Product Termination Notification (PTN) according to the JEDEC-Standard we will inform at an early stage about inevitable product discontinuance. According to this we cannot guarantee that all products within our product range will always be available. Therefore it needs to be verified with the field sales engineer or the internal sales person in charge about the current product availability expectancy before or when the product for application design-in disposal is considered. The approach named above does not apply in the case of individual agreements deviating from the foregoing for customer-specific products.

7. Property Rights
All the rights for contractual products produced by Würth Elektronik eiSos GmbH & Co. KG on the basis of ideas, development contracts as well as models or templates that are subject to copyright, patent or commercial protection supplied to the customer will remain with Würth Elektronik eiSos GmbH & Co. KG. Würth Elektronik eiSos GmbH & Co. KG does not warrant or represent that any license, either expressed or implied, is granted under any patent right, copyright, mask work right, or other intellectual property right relating to any combination, application, or process in which Würth Elektronik eiSos GmbH & Co. KG components or services are used.

8. General Terms and Conditions
Unless otherwise agreed in individual contracts, all orders are subject to the current version of the “General Terms and Conditions of Würth Elektronik eiSos Group”, last version available at www.we-online.com.

© May 2016