chanhvinh.com
more than you expect

171010550

MagI³C Power Module
VDMM – Variable Step Down MicroModule

2.5V – 5.5V / 1.2A / 0.8V – 5.5V Output

DESCRIPTION

The VDMM 171010550 MagI³C MicroModule provides a fully integrated DC-DC power supply including the switching regulator with integrated MOSFETs, compensation, and shielded inductor in one package.

The 171010550 offers high efficiency and delivers up to 1.2A of output current. It operates with an input voltage from 2.5V to 5.5V and is designed for a small solution size.

The selectable forced PWM or PFM/PWM mode allows for the choice between high efficiency and low output voltage ripple at light load.

It is available in an LGA-6EP package (2.5 x 2.5 x 1.2mm).

This module has integrated protection circuitry that guards against thermal overstress with thermal shutdown and protects against electrical damage using overcurrent, short-circuit and undervoltage protections.

TYPICAL APPLICATIONS

- General point of load power supply for low power systems
- Replacement of linear regulators
- DSP and FPGA power supply auxiliary voltages
- Portable instruments
- Battery powered equipment

FEATURES

- Peak efficiency up to 96%
- Output current up to 1.2A
- Input voltage range: 2.5V to 5.5V
- Output voltage range: 0.8V to 5.5V
- 25 µA typical quiescent current
- Integrated shielded inductor
- Low output voltage ripple: ±6mV typ.
- Output voltage accuracy over temperature: 2% max.
- Fixed switching frequency: 4 MHz
- Constant On-Time control
- Synchronous operation
- Selectable forced PWM or PFM/PWM mode
- Undervoltage lockout protection (UVLO)
- Embedded soft-start
- Thermal shutdown
- Short-circuit protection
- Cycle-by-cycle current limit
- RoHS and REACh compliant
- Operating ambient temperature up to 85°C
- Operating junction temp. range: -40 to 125°C
- Complies with EN55032 class B radiated emissions standard



TYPICAL CIRCUIT DIAGRAM

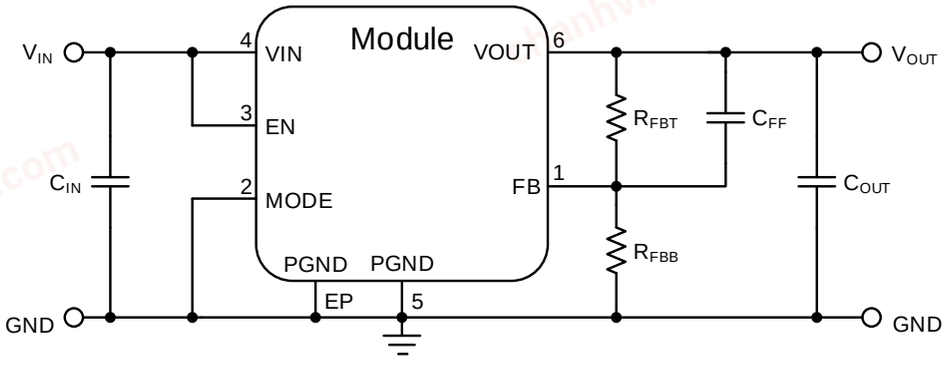

© July 2019

chanhvinh.com
more than you expect

171010550

MagI³C Power Module
VDMM – Variable Step Down MicroModule

PACKAGE

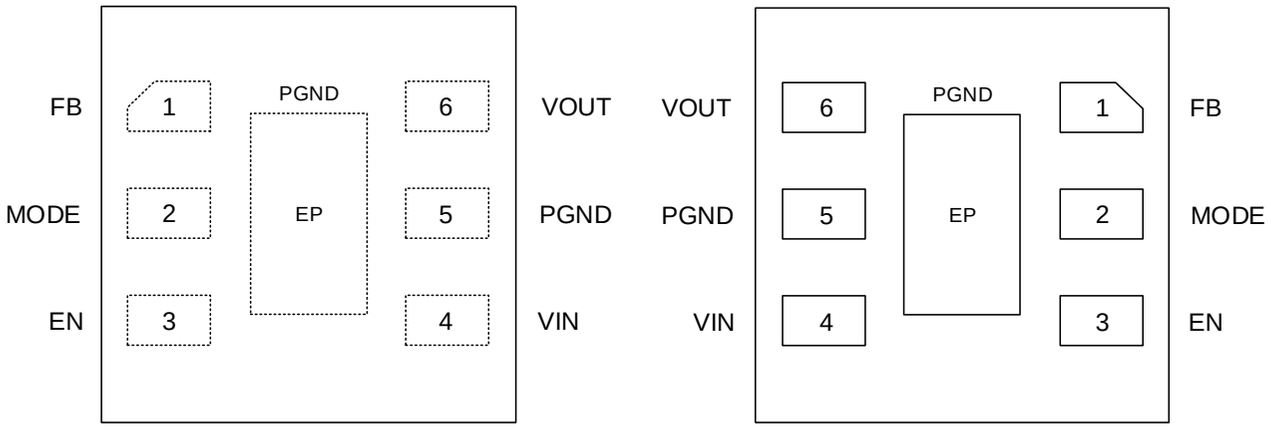

Top View

Bottom View

MARKING DESCRIPTION

MARKING	DESCRIPTION
°WE	Pin 1 Indicator + Logo
010550	Order Code
XXYYZ	Year + Week + Lot Number

PIN DESCRIPTION

SYMBOL	NUMBER	TYPE	DESCRIPTION
FB	1	Input	Feedback pin. This pin must be connected to the external resistor divider (between VOUT and GND) to adjust the output voltage.
MODE	2	Input	Forced PWM or PFM/PWM mode selection pin. Setting this pin high, the forced PWM mode is selected for any load current. Setting this pin low, PFM/PWM is selected, with the transition automatically between the two operations according to the load. This pin must not be left floating.
EN	3	Input	Enable pin. Setting this pin high enables the device, while setting this pin low shuts down the device. This pin must not be left floating.
VIN	4	Power	Input voltage. Place the input capacitor as close as possible.
PGND	5	Power	Power Ground. It must be connected to the ground plane and the Thermal Pad.
VOUT	6	Power	Output voltage. Place output capacitors as close as possible. For best thermal performance use copper plane(s) at this pin.
PGND	EP	Exposed Pad	Exposed Pad. This pin is internally electrically connected to PGND. It is recommended to connect it to the ground plane for device heat dissipation.

© July 2019

chanhvinh.com

171010550

MagI³C Power Module
VDMM – Variable Step Down MicroModule

ORDERING INFORMATION

ORDER CODE	SPECIFICATIONS	PACKAGE	PACKAGING UNIT
171010550	1.2A / 0.8-5.5Vout version	LGA-6EP	7” Reel (1000 pieces)
178010550	1.2A / 0.8-5.5Vout version	Eval Board	

SALES INFORMATION

SALES CONTACTS
Würth Elektronik eiSos GmbH & Co. KG EMC & Inductive Solutions Max-Eyth-Str. 1 74638 Waldenburg Germany Tel. +49 (0) 7942 945 0 www.we-online.com/powermodules Technical support: powermodules@we-online.com

© July 2019

chanhvinh.com
more than you expect

ABSOLUTE MAXIMUM RATINGS

Caution:
Exceeding the listed absolute maximum ratings may affect the device negatively and may cause permanent damage.

SYMBOL	PARAMETER	LIMITS		UNIT
		MIN (1)	MAX (1)	
VIN	Input voltage	-0.3	6	V
VOUT	Output voltage	-0.3	V_{IN}+0.3	V
FB	Feedback pin	-0.3	V_{IN}+0.3	V
EN	Enable pin	-0.15	V_{IN}+0.3	V
MODE	Mode pin	-0.3	V_{IN}+0.3	V
$T_{storage}$	Assembled, non-operating storage temperature	-65	150	°C
V_{ESD}	ESD voltage (HBM), all pins (C=100pF, R= 1.5kΩ)	-4	4	kV

OPERATING CONDITIONS

Operating conditions are conditions under which the device is intended to be functional. All values are referenced to GND.

MIN and MAX limits are valid for the recommended ambient temperature range of **-40°C to 85°C**. Typical values represent statistically the utmost probable values at the following conditions: V_{IN} = 5V, V_{OUT} = 1.8V, C_{IN} = 4.7µF ceramic, C_{OUT} =10µF ceramic, unless otherwise noted.

SYMBOL	PARAMETER	MIN (1)	TYP (2)	MAX (1)	UNIT
V_{IN}	Input voltage	2.5	-	5.5	V
V_{OUT}	Output voltage (depending on the external resistor divider)	0.8	-	5.5	V
T_A	Ambient temperature range	-40	-	85 (3)	°C
T_{JOP}	Junction temperature range	-40	-	125	°C
I_{OUT}	Nominal output current			1.2	A

THERMAL SPECIFICATIONS

SYMBOL	PARAMETER	TYP (2)	UNIT
Θ_{JA}	Junction-to-ambient thermal resistance (4)	110	K/W
Θ_{JC}	Junction-to-case (exposed pad) thermal resistance (4)	82	K/W
TSD	Thermal shutdown, rising	160	°C
	Thermal shutdown hysteresis, falling	10	°C

© July 2019

chanhvinh.com
more than you expect

ELECTRICAL SPECIFICATIONS

MIN and MAX limits are valid for the recommended ambient temperature range of **-40°C to 85°C**. Typical values represents statistically the utmost probable values at the following conditions: V_{IN} = 5V, V_{OUT} = 1.8V, C_{IN} = 4.7µF ceramic, C_{OUT} =10µF ceramic, unless otherwise noted.

SYMBOL	PARAMETER	TEST CONDITIONS	MIN (1)	TYP (2)	MAX (1)	UNIT
Output current						
I_{OCP}	Overcurrent protection	T_A = 25°C	1.5	2.3	3.0	A
Output accuracy						
V_{FB}	Reference voltage	T_A = 25°C	0.784	0.8	0.816	V
	Reference voltage over temperature	-40°C ≤ T_A ≤ 85°C	0.784	0.8	0.816	V
I_{FB}	Feedback input bias current		-	0	50	nA
V_{OUT}	Line regulation	V_{IN} = V_{OUT}+1V to 5.5V, MODE = low	-	0.04	0.2	%/V
	Load regulation	500mA < I_{LOAD} < 1A	-	-0.9	-	%/A
	Output voltage ripple	V_{IN} = 3.6V, V_{OUT} = 1.8V, I_{OUT} = 100mA MODE = high, 20MHz BW, T_A = 25°C(5)	-	6	-	mV
		V_{IN} = 3.6V, V_{OUT} = 1.8V, I_{OUT} = 100mA MODE = low, 20MHz BW, T_A = 25°C(5)	-	65	-	mV
Switching frequency						
f_{SW}	Switching frequency		3.6	4	4.4	MHz
Enable and undervoltage lockout						
V_{UVLO}	V_{IN} undervoltage threshold	V_{IN} increasing	2	2.25	2.4	V
		V_{IN} decreasing	-	2	-	V
	V_{IN} undervoltage hysteresis	T_A = 25°C	-	175	-	mV
V_{ENABLE}	Enable threshold trip point	Enable logic high voltage T_A = 25°C	-	0.85	-	V
		Enable logic low voltage T_A = 25°C	-	0.75	-	V
I_{ENABLE}	Enable pin input current	Enable = high, T_A = 25°C	-	0.1	-	µA
		Enable = low, T_A = 25°C	-	0.1	-	µA
MODE selection						
V_{MODE}	MODE threshold trip point	Mode logic high voltage T_A = 25°C	-	0.85	-	V
		Mode logic low voltage T_A = 25°C	-	0.75	-	V
I_{MODE}	MODE pin input current	MODE = high, T_A = 25°C	-	0.1	-	µA
		MODE = low, T_A = 25°C	-	0.1	-	µA
Soft-Start						
t_{SS}	Soft-start time	T_A = 25°C (rising edge to 95% of V_{OUT})		128		µs

© July 2019

chanhvinh.com
more than you expect

ELECTRICAL SPECIFICATIONS

MIN and MAX limits are valid for the recommended ambient temperature range of **-40°C to 85°C**. Typical values represents statistically the utmost probable values at the following conditions: V_{IN} = 5V, V_{OUT} = 1.8V, C_{IN} = 4.7µF ceramic, C_{OUT} =10µF ceramic, unless otherwise noted.

SYMBOL	PARAMETER	TEST CONDITIONS	MIN (1)	TYP (2)	MAX (1)	UNIT
Efficiency						
η	Efficiency	V_{IN} = 3.6V, V_{OUT} = 1.8V, I_{OUT} = 50mA MODE = low	-	87	-	%
		V_{IN} = 5V, V_{OUT} = 3.3V, I_{OUT} = 50mA MODE = low	-	90	-	%
		V_{IN} = 3.6V, V_{OUT} = 1.8V, I_{OUT} = 200mA, MODE = high	-	88	-	%
		V_{IN} = 5V, V_{OUT} = 3.3V, I_{OUT} = 200mA, MODE = high	-	90	-	%
		V_{IN} = 3.6V, V_{OUT} = 3.3V, I_{OUT} = 200mA, MODE = low	-	96	-	%
Input quiescent/shutdown current						
I_{SD}	Shutdown quiescent current	V_{ENABLE} = low, T_A = 25°C, V_{IN} = 5V	-	0.1	-	µA
I_{SD}	Shutdown quiescent current	V_{ENABLE} = low, T_A = 25°C, V_{IN} = 2.5V	-	0.09	-	µA
I_{IN}	No load input current	MODE = high, EN = high, switching with no load, V_{IN} = 2.5V, T_A = 25°C	-	21	-	µA
		MODE = low, EN = high, switching with no load, V_{IN} = 2.5V, T_A = 25°C	-	0.03	-	µA
		MODE = high, EN = high, no switching, V_{IN} = 5V, T_A = 25°C	-	11	-	µA
		MODE = low, EN = high, no switching, V_{IN} = 5V, T_A = 25°C	-	0.03	-	µA

© July 2019

171010550

MagI³C Power Module
VDMM – Variable Step Down MicroModule

RoHS, REACh

RoHS directive	COMPLIANT RoHS&REACh WÜRTH ELEKTRONIK	Directive 2011/65/EU of the European Parliament and the Council of June 8th, 2011 on the restriction of the use of certain hazardous substances in electrical and electronic equipment.
REACh directive		Directive 1907/2006/EU of the European Parliament and the Council of June 1st, 2007 regarding the Registration, Evaluation, Authorization and Restriction of Chemicals (REACh).

PACKAGE SPECIFICATIONS

ITEM	PARAMETER	TYP(2)	UNIT
Mold Compound	EME-A382, UL94V-0	-	-
Weight	-	0.0204	g

NOTES

(1) Min and Max limits are 100% production tested at 25°C. Limits over the operating temperature range are guaranteed through correlation using Statistical Quality Control (SQC) methods.
(2) Typical numbers are valid at 25°C ambient temperature and represent statistically the utmost probable values assuming a Gaussian distribution.
(3) Depending on heat sink design, number of PCB layers, copper thickness and air flow.
(4) Measured on the 178010550 evaluation board, a 40 x 40 mm two layer board, with 35µm (1 ounce) copper.
(5) The industry standard for comparison of the output voltage ripple between switching regulators or modules requires a 10µF ceramic (sometimes additional 1µF ceramic in parallel) at the point of load where the voltage measurement is done using an oscilloscope with its probe and probe jack designed for low voltage/high frequency (low impedance) measurement. The oscilloscopes bandwidth is limited at 20MHz.

© July 2019

171010550

MagI³C Power Module
VDMM – Variable Step Down MicroModule

TYPICAL PERFORMANCE CURVES

If not otherwise specified, the following conditions apply: V_{IN} = 5V; C_{IN} = 4.7µF X5R ceramic; C_{OUT} = 10µF X5R ceramic, C_{FF} = 22pF, T_{AMB} = 25°C.

RADIATED EMISSIONS EN55032 (CISPR-32) CLASS B COMPLIANT

Measured with module on an Evaluation Board 178010550 in a Fully Anechoic Room (FAR) at 3m antenna distance.

TEST SETUP

Input wire length:
- Radiated Emission: 160cm (80cm Horizontal + 80cm Vertical)

Output wire length (Radiated Emission):
- Short wire (without input filter) : Load directly on evaluation board
- Long wire (with input filter) : 1m

SHORT WIRE (without input filter)

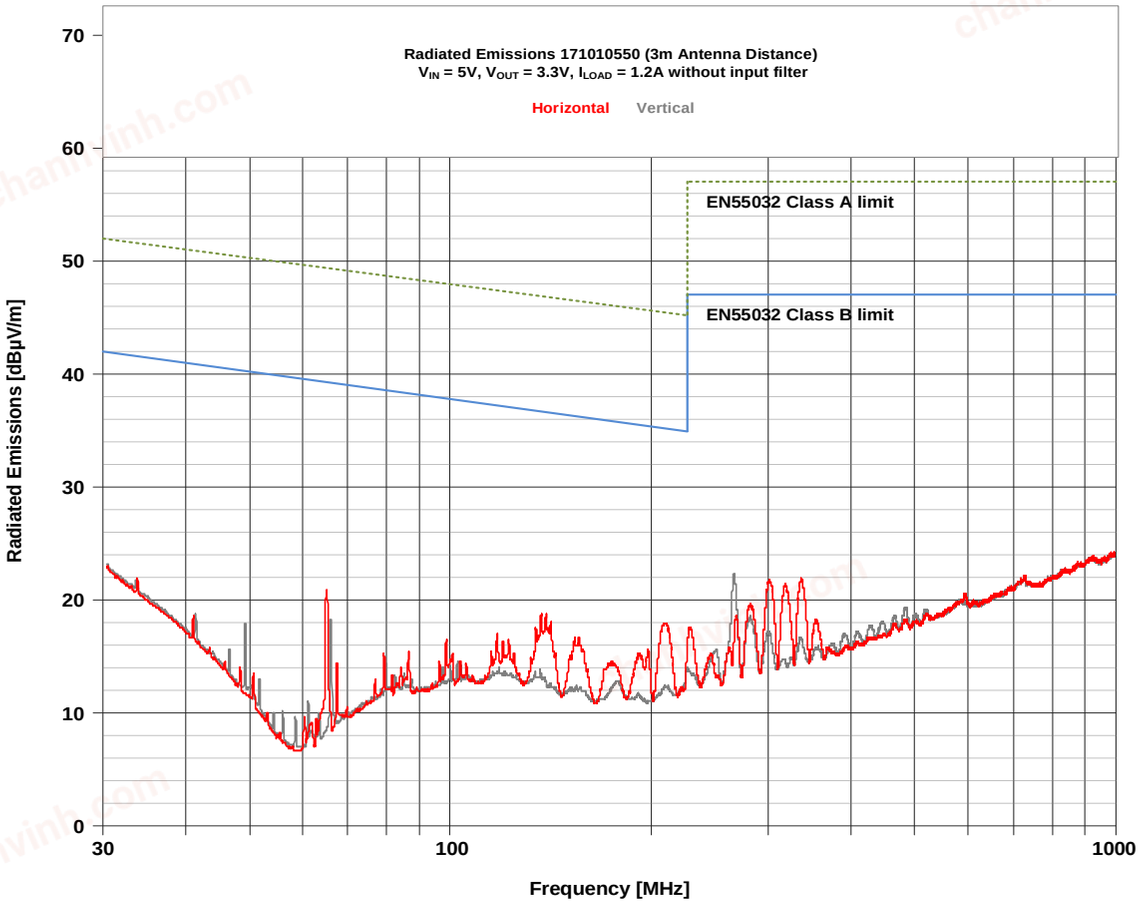

© July 2019

171010550

MagI³C Power Module
VDMM – Variable Step Down MicroModule

LONG WIRE (with input filter)

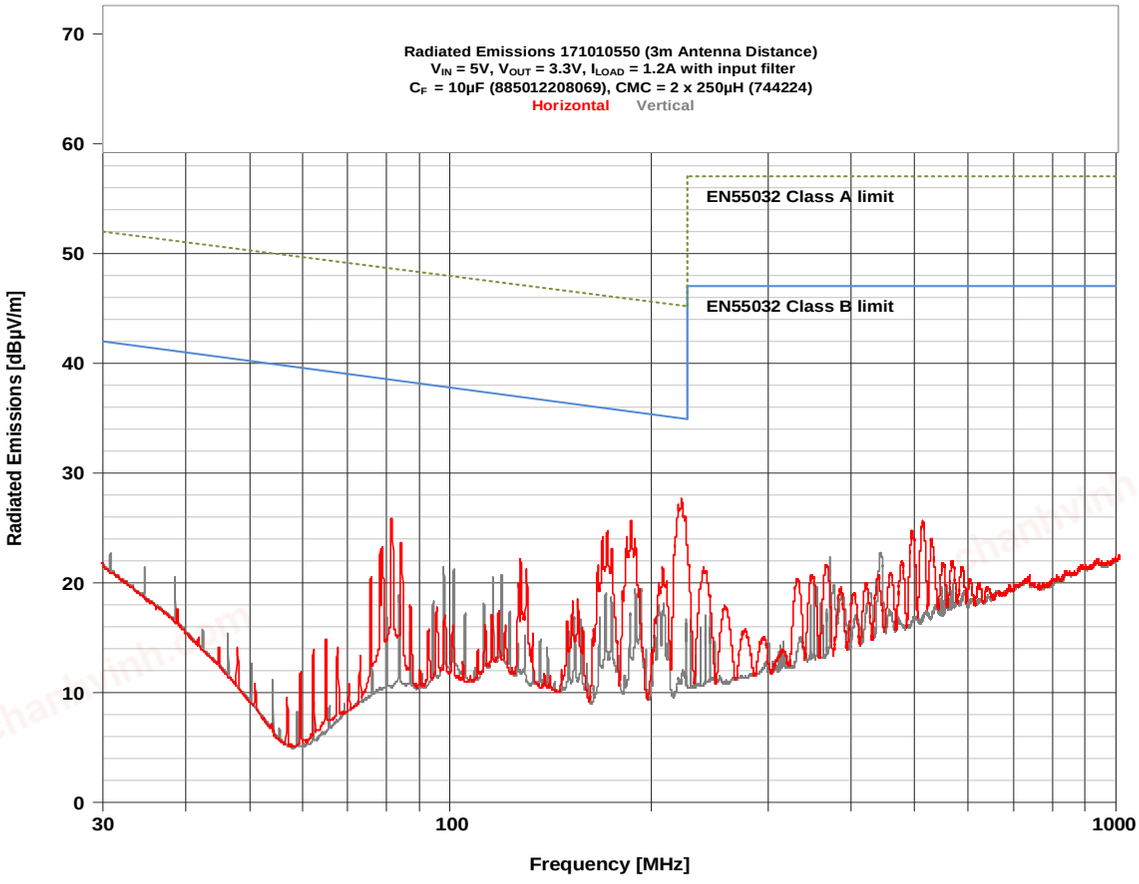

The diagram above refers only to forced PWM mode. Nevertheless similar results would be obtained in PFM/PWM mode because at this load current (1.2A) there is no difference between the two modes.

When using long wires at the output, common mode current occur and contribute to the radiated interference. To reduce this aspect a common mode choke at the input wires is placed. It also avoids radiation from the input wires. In a practical point of load application, the common mode choke is not necessary as the module is placed directly at the load. In case the application cannot avoid long wires at input or output, the common mode choke is a practical solution to meet the meet the EMI standard limit.

© July 2019

chanhvinh.com

171010550

MagI³C Power Module
VDMM – Variable Step Down MicroModule

EFFICIENCY

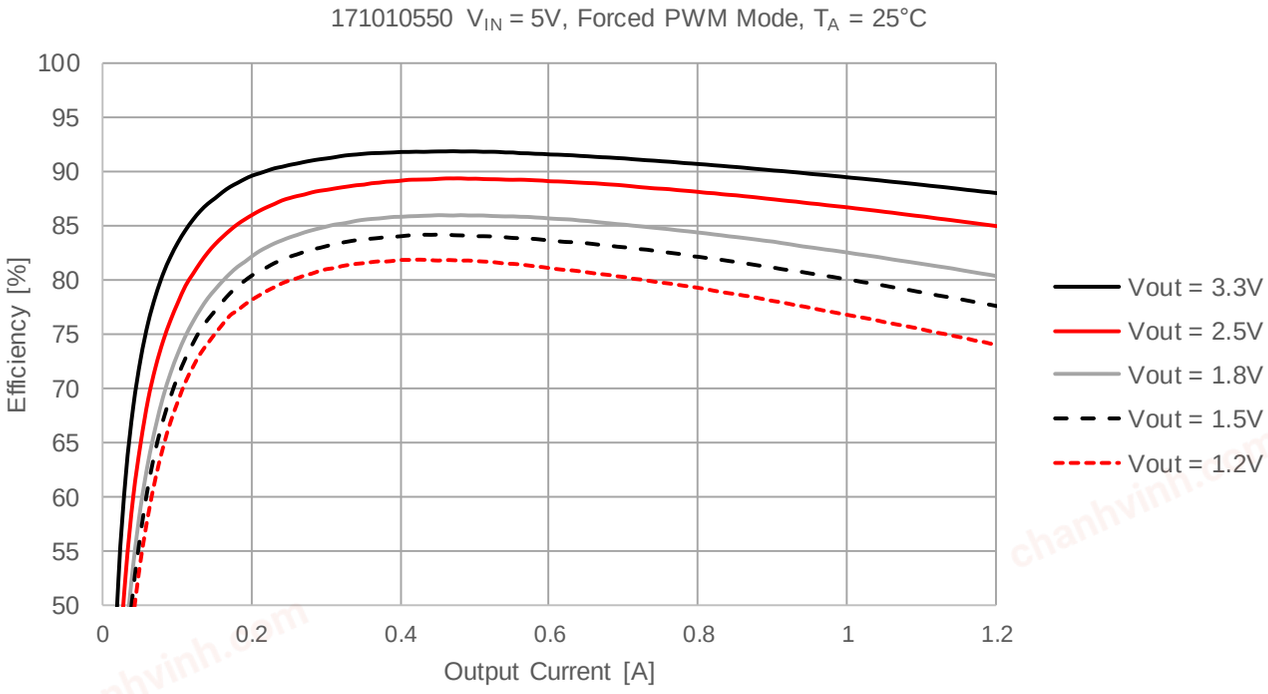

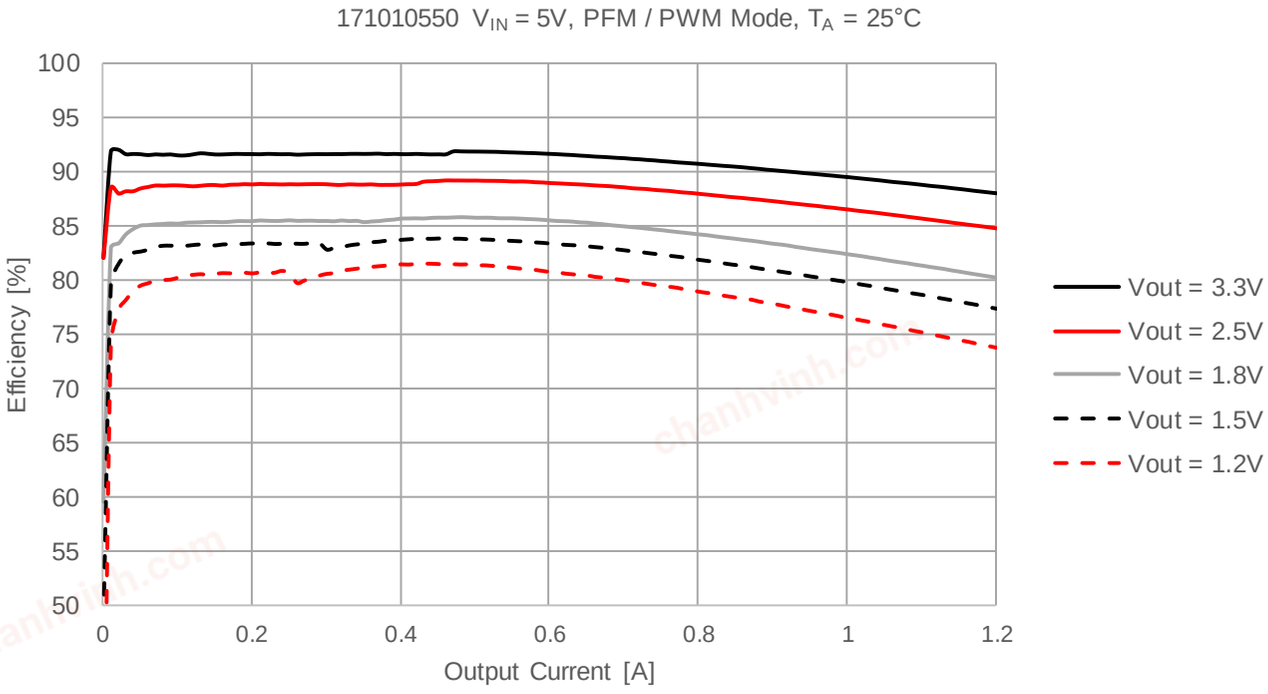

© July 2019

171010550

MagI³C Power Module
VDMM – Variable Step Down MicroModule

EFFICIENCY

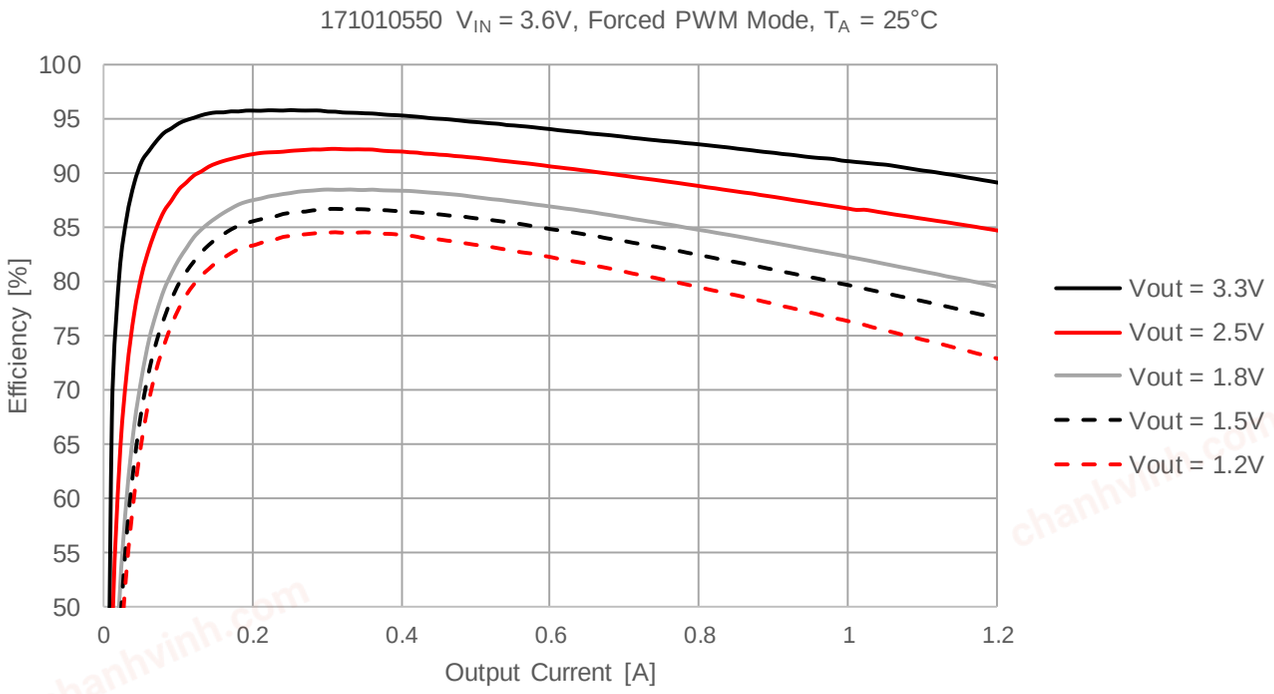

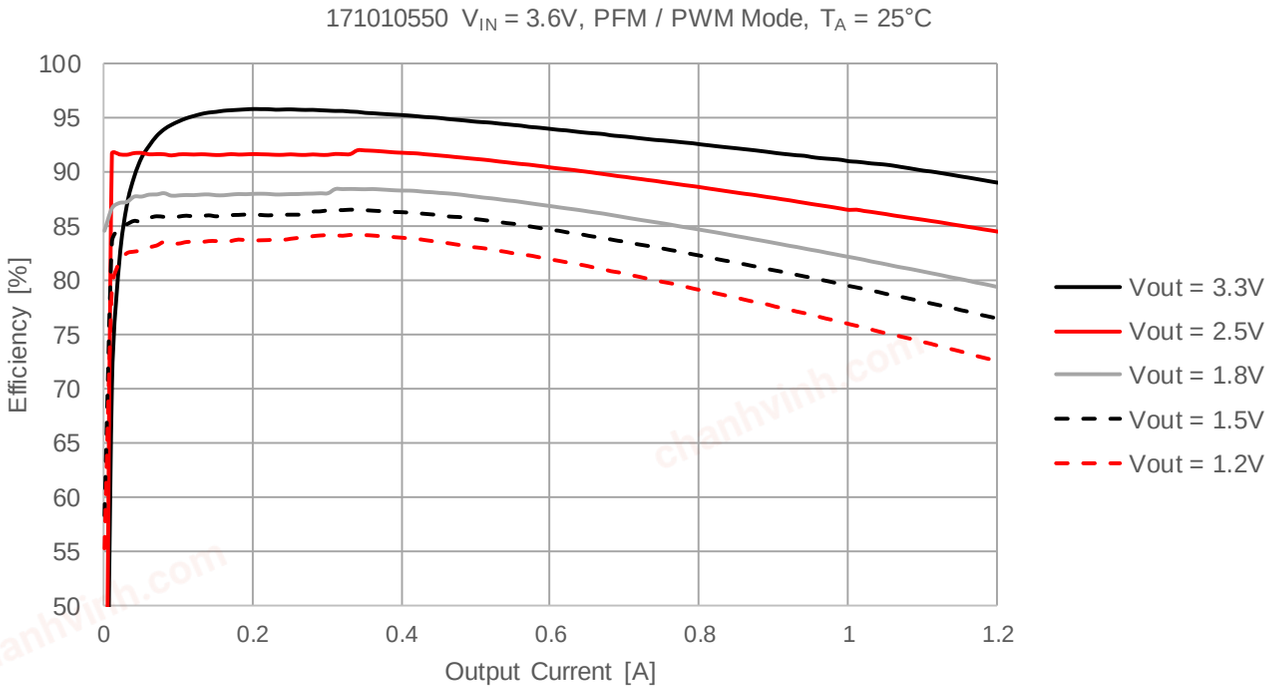

© July 2019

chanhvinh.com

171010550

MagI³C Power Module
VDMM – Variable Step Down MicroModule

EFFICIENCY

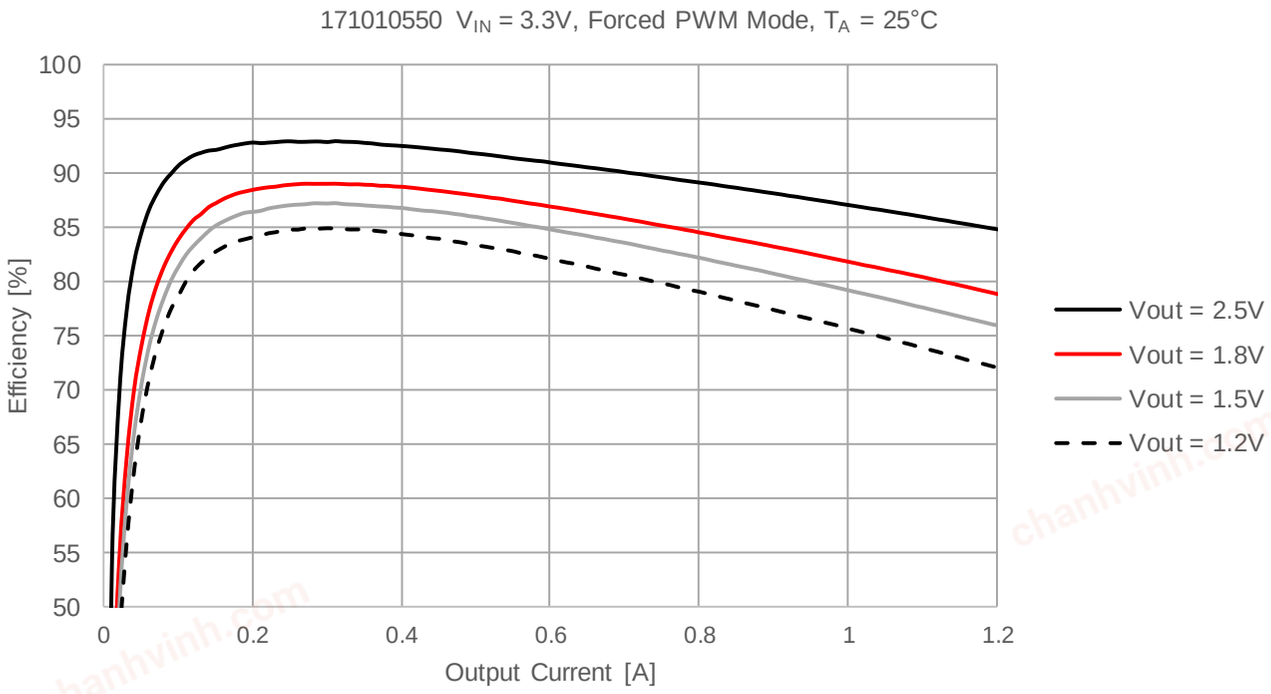

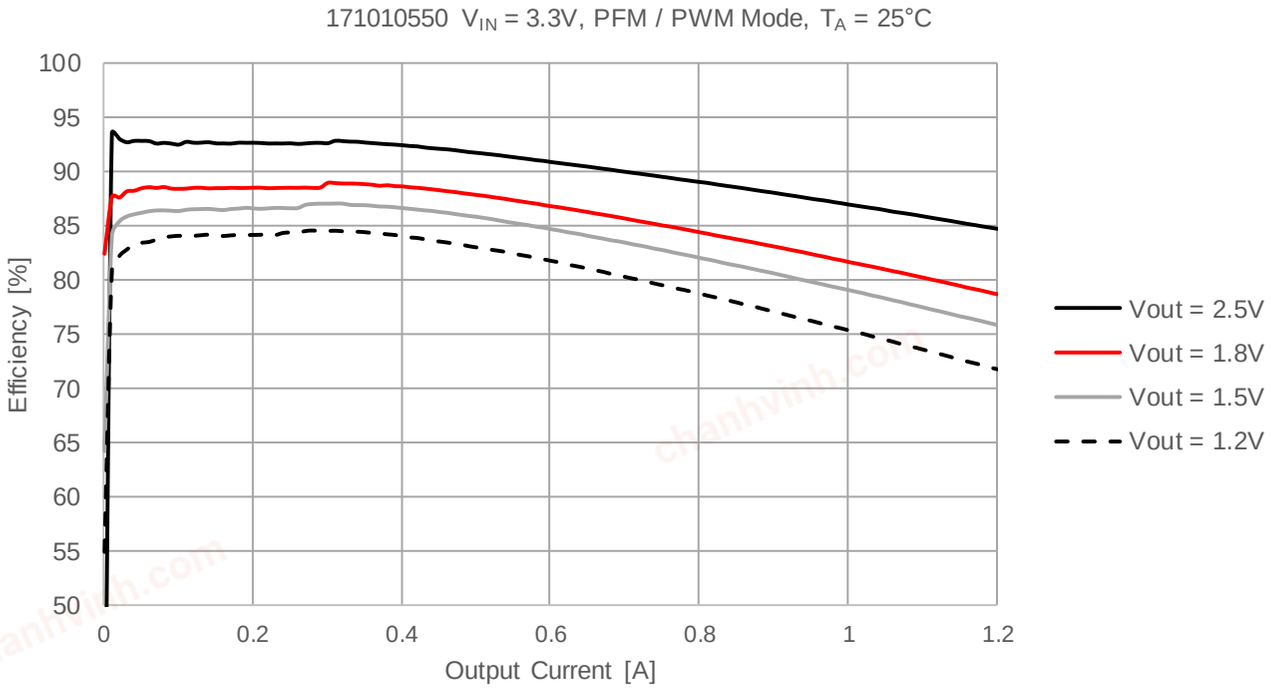

© July 2019

chanhvinh.com
more than you expect

EFFICIENCY

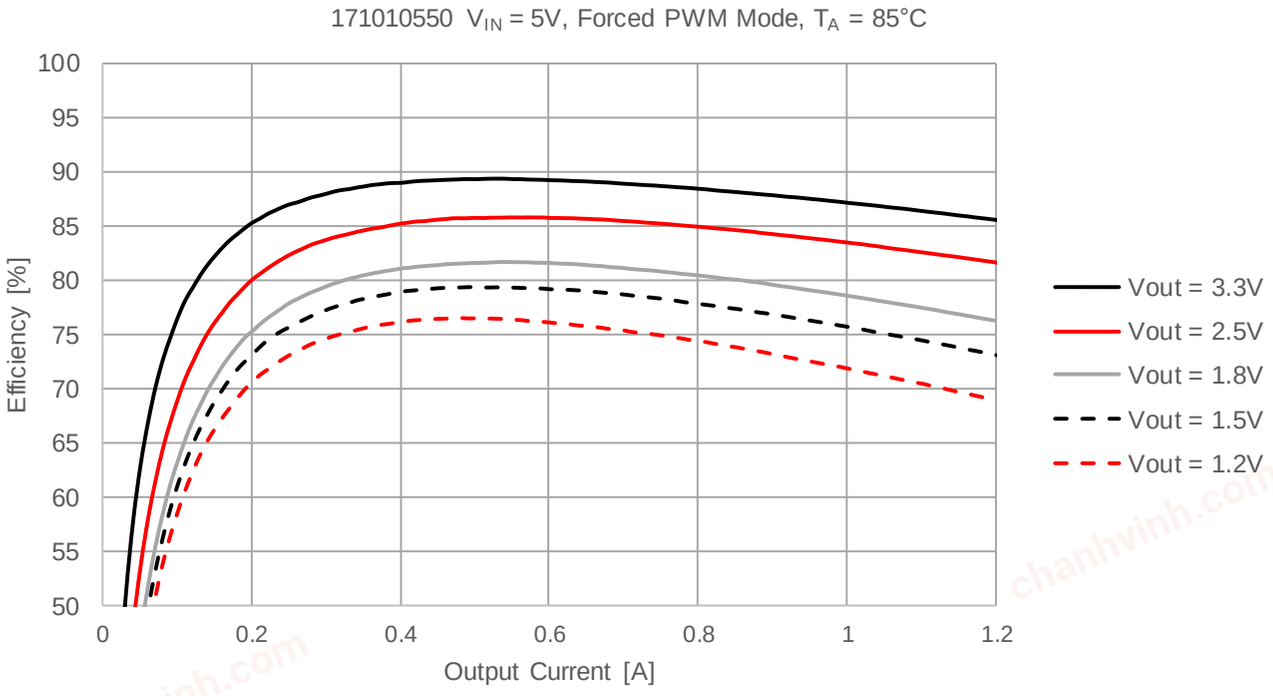

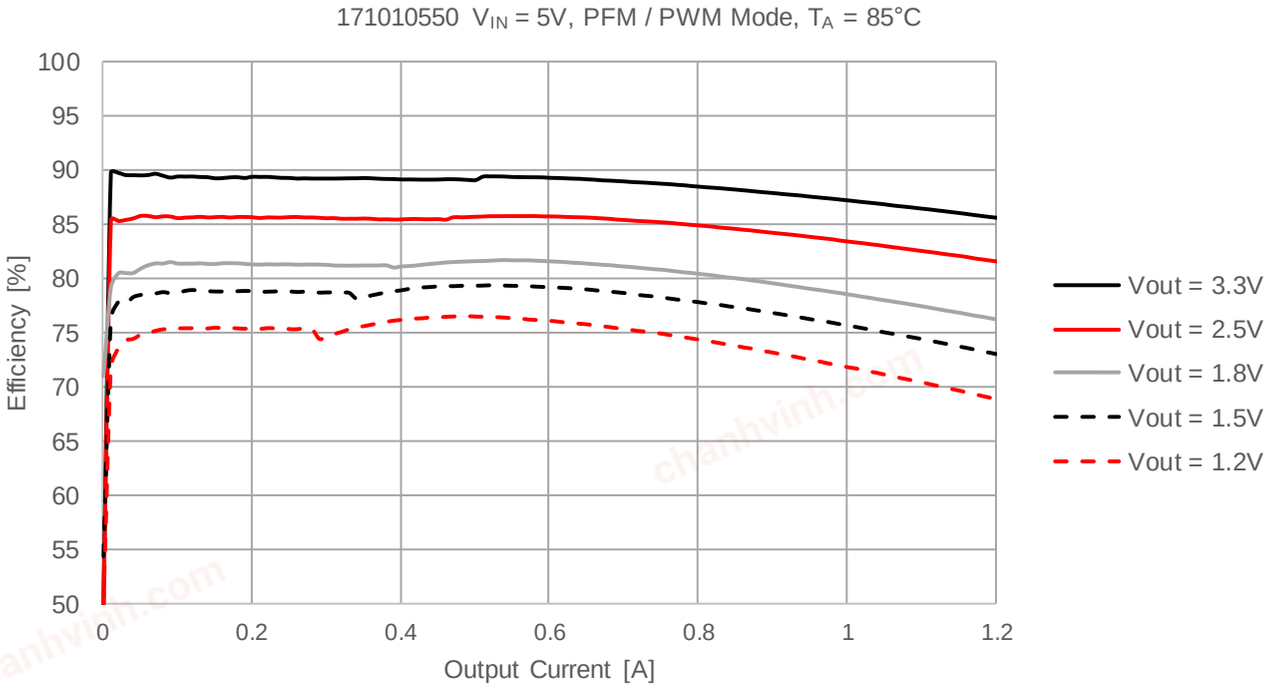

© July 2019

171010550

MagI³C Power Module
VDMM – Variable Step Down MicroModule

EFFICIENCY

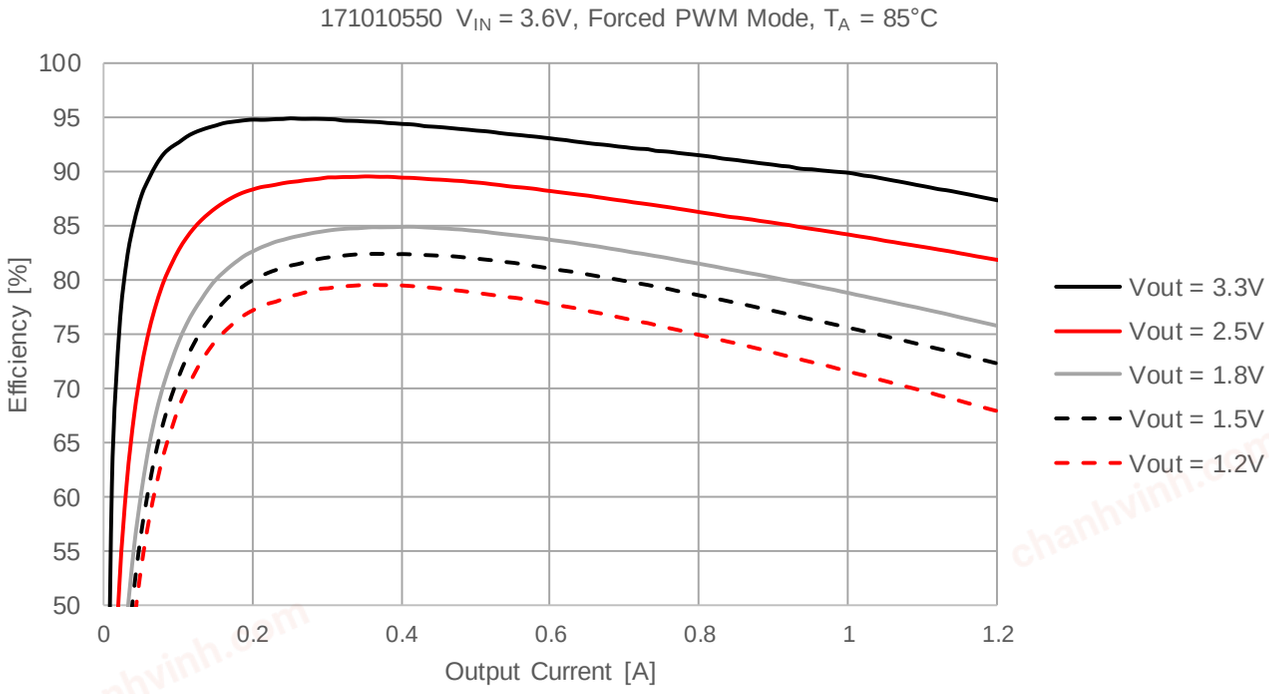

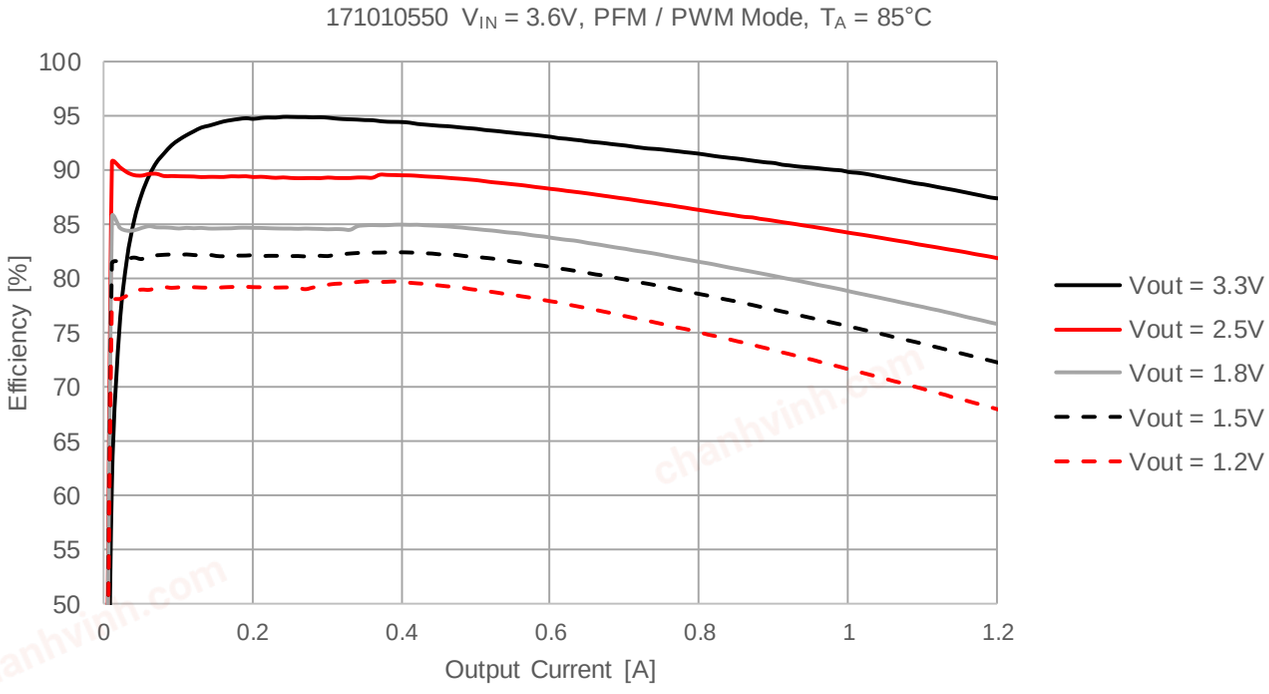

© July 2019

171010550

MagI³C Power Module
VDMM – Variable Step Down MicroModule

EFFICIENCY

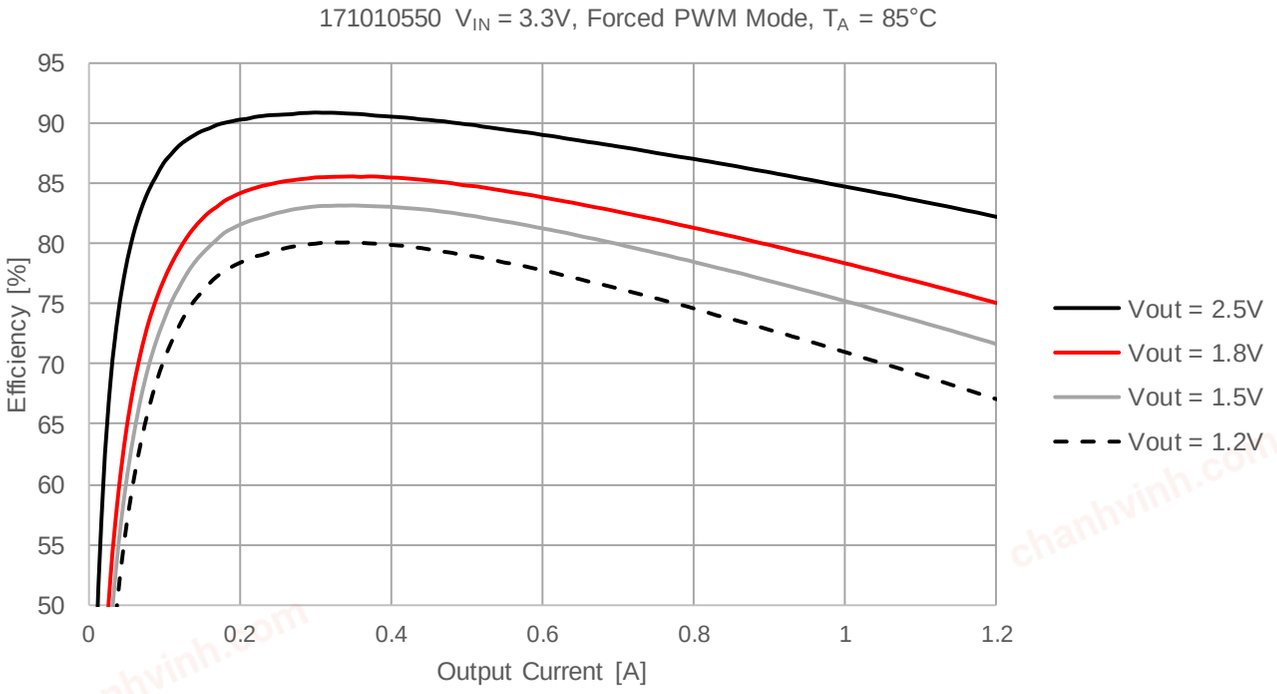

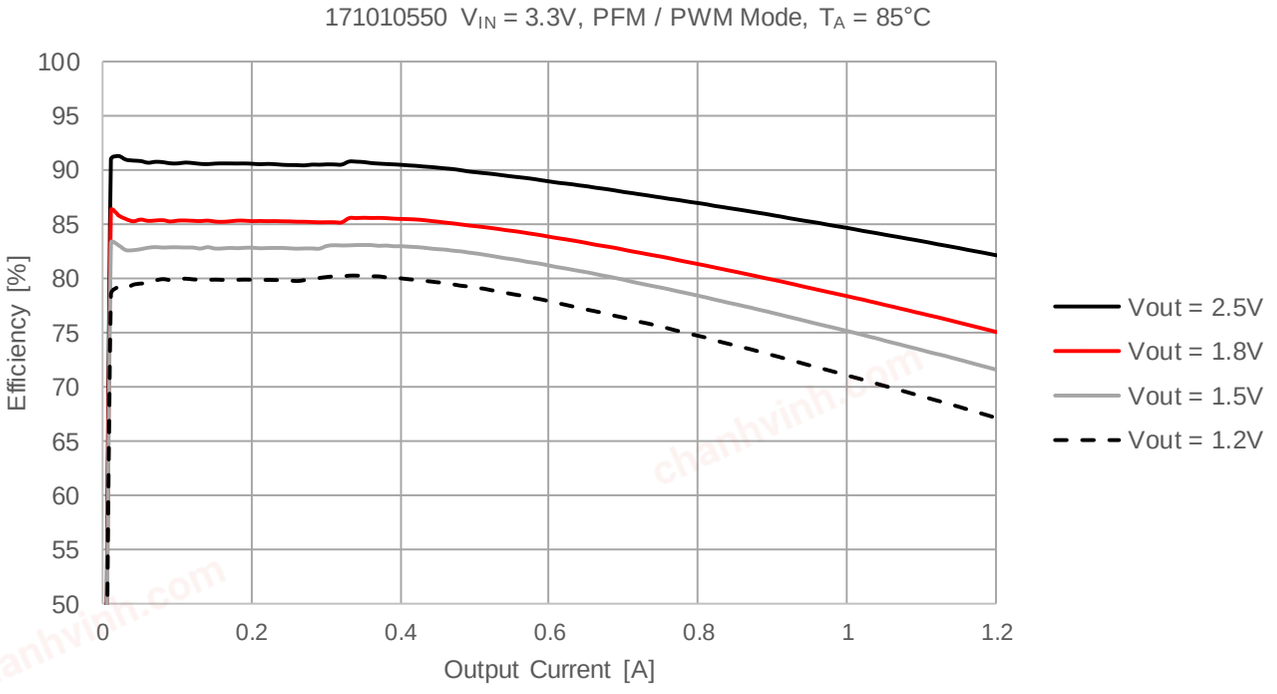

© July 2019

171010550

MagI³C Power Module
VDMM – Variable Step Down MicroModule

POWER DISSIPATION

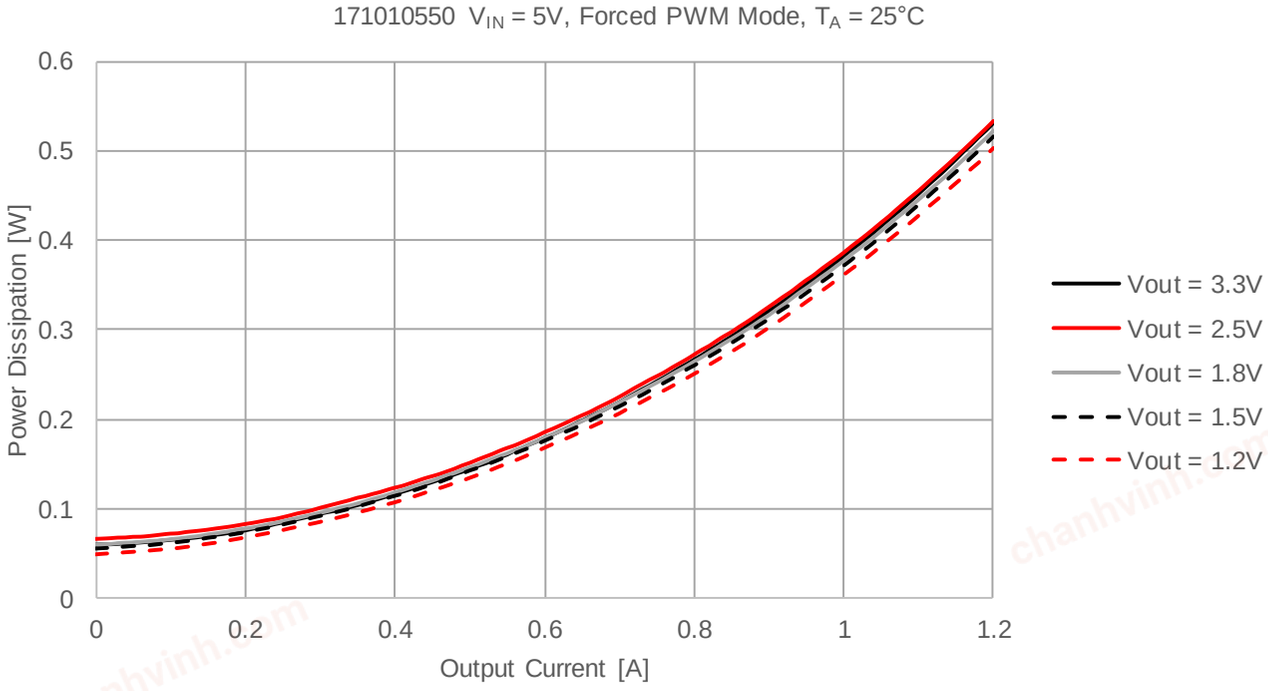

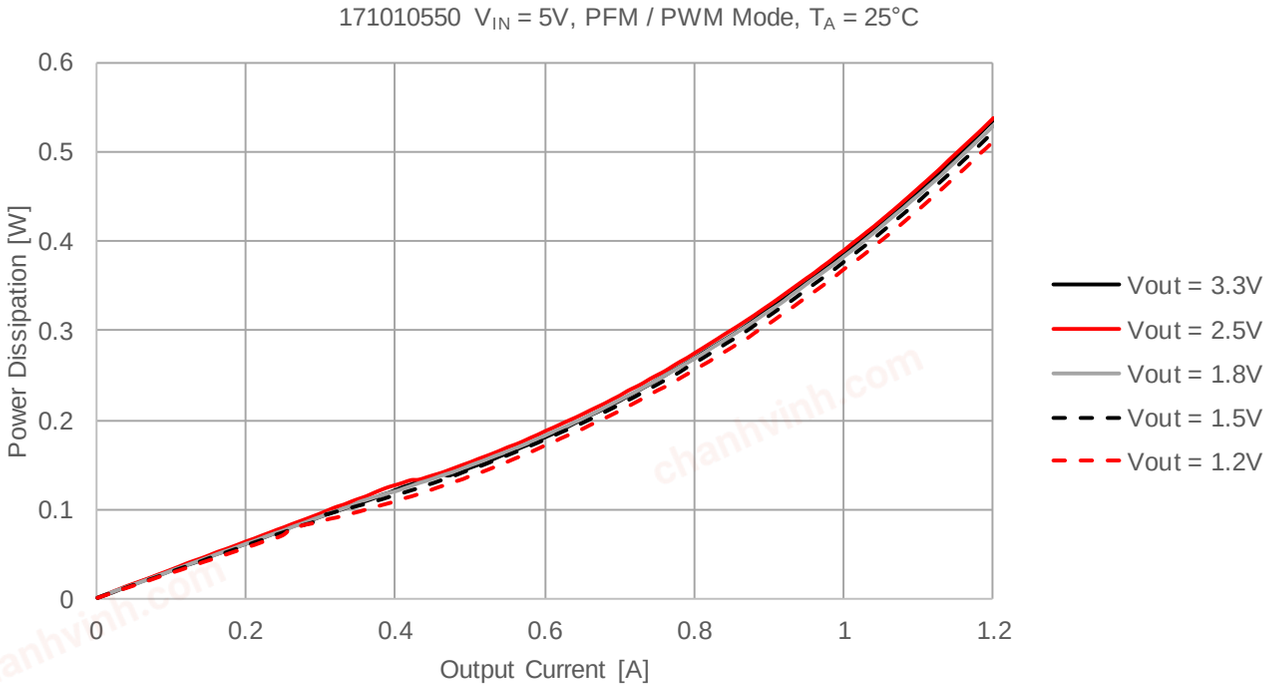

© July 2019

171010550

MagI³C Power Module
VDMM – Variable Step Down MicroModule

POWER DISSIPATION

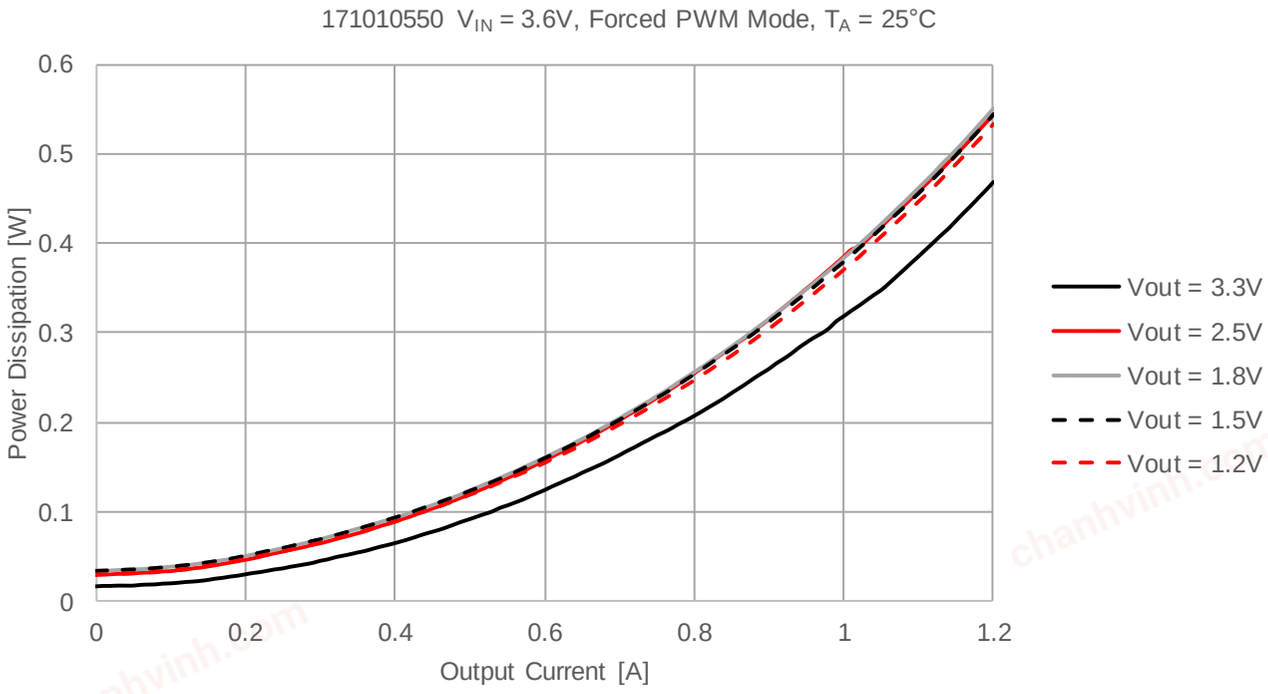

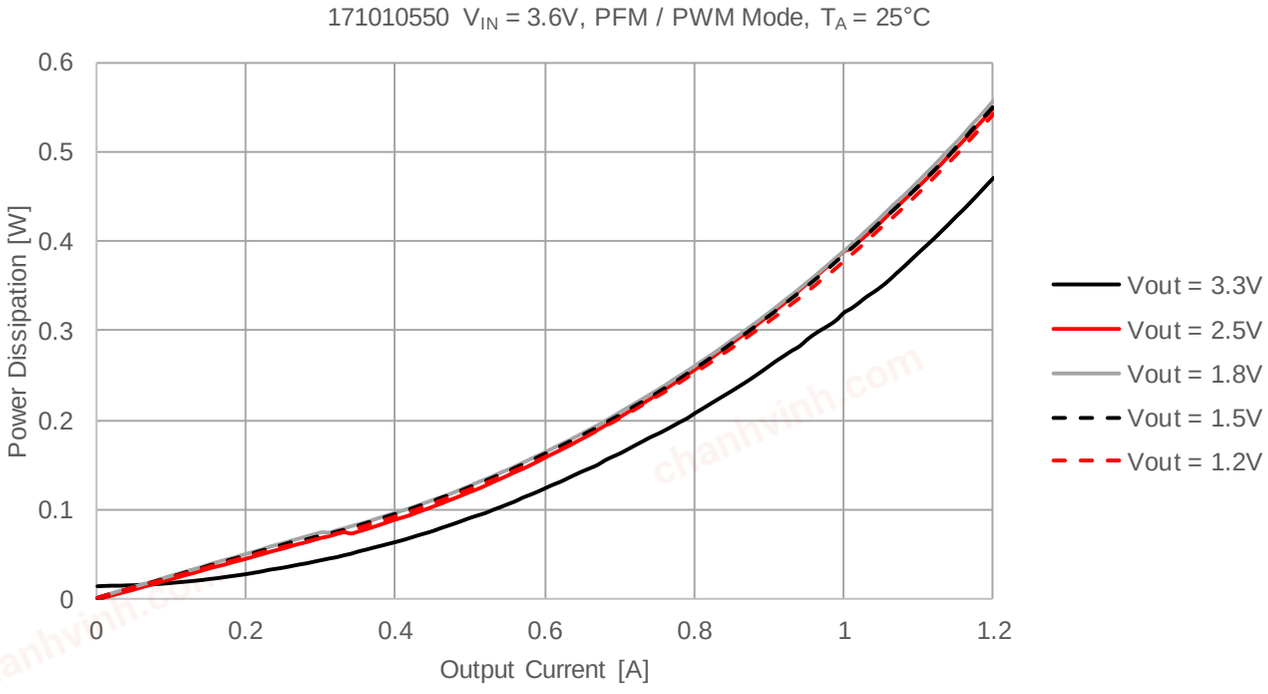

© July 2019

171010550

MagI³C Power Module
VDMM – Variable Step Down MicroModule

POWER DISSIPATION

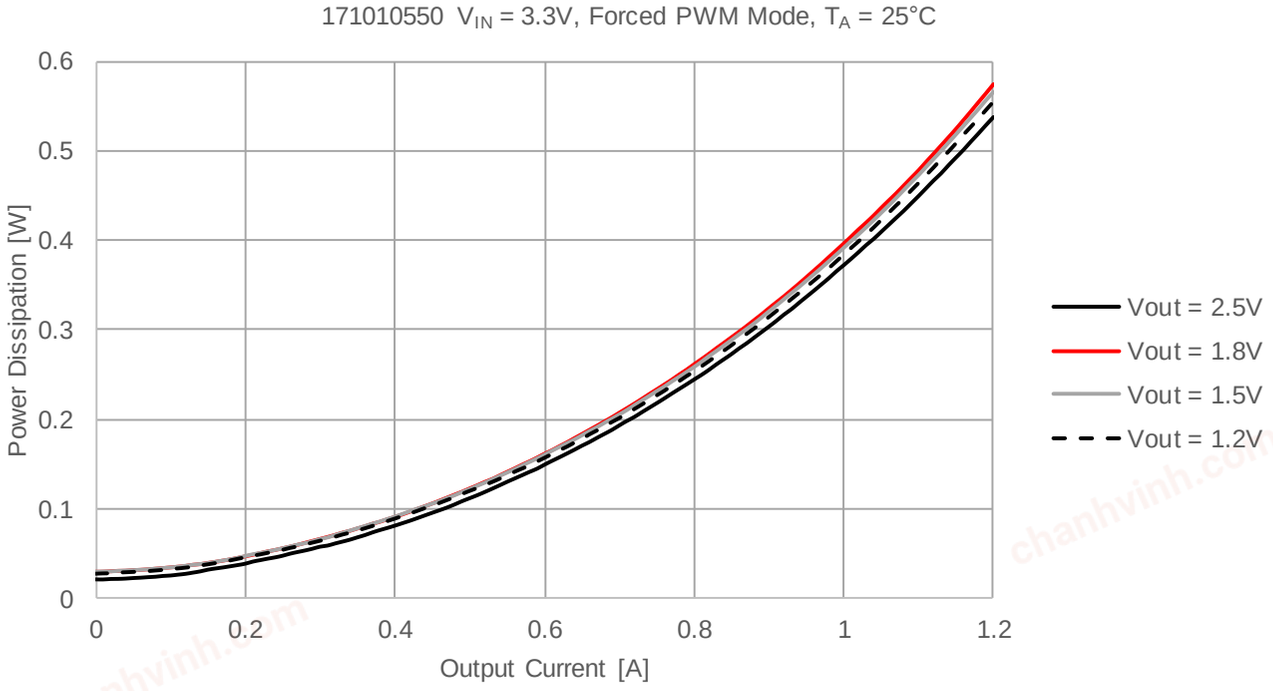

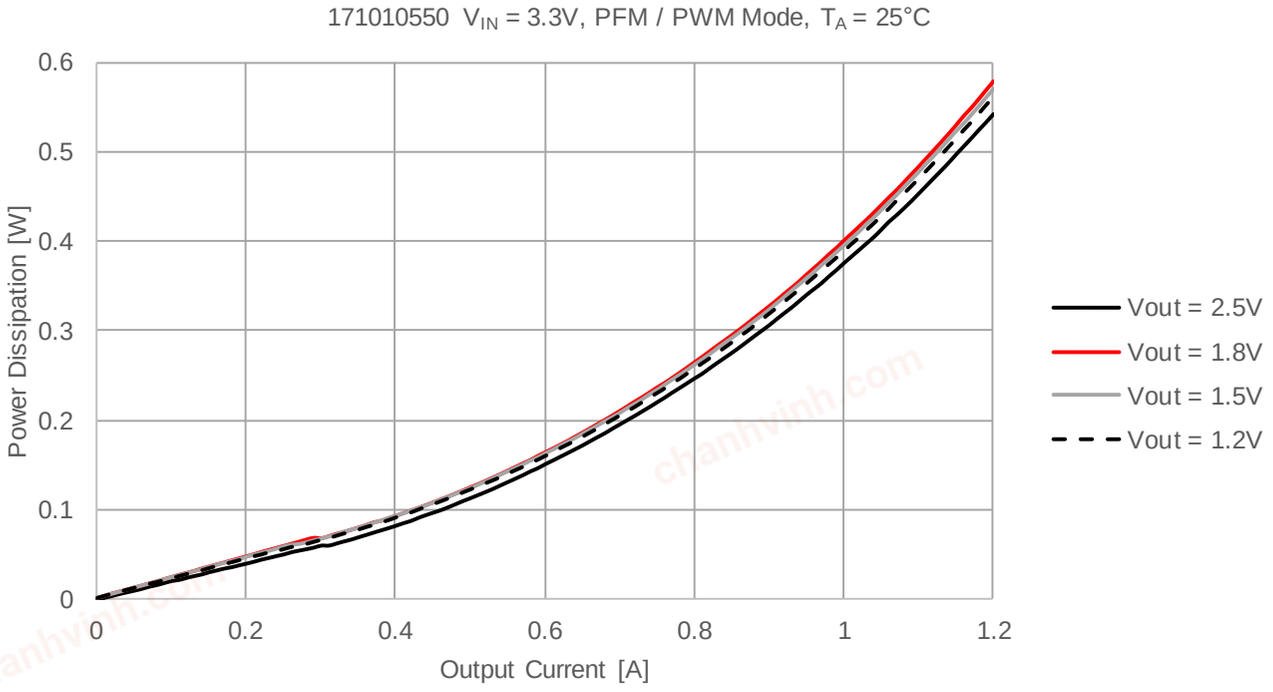

© July 2019

chanhvinh.com
more than you expect

POWER DISSIPATION

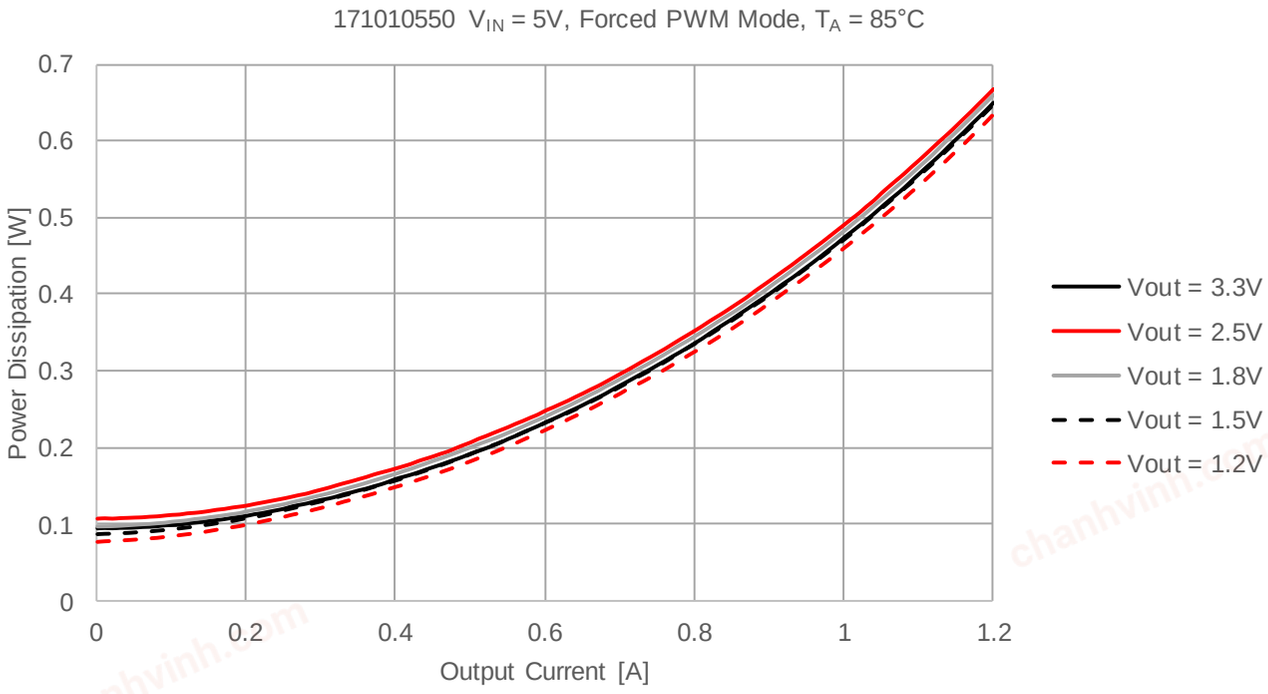

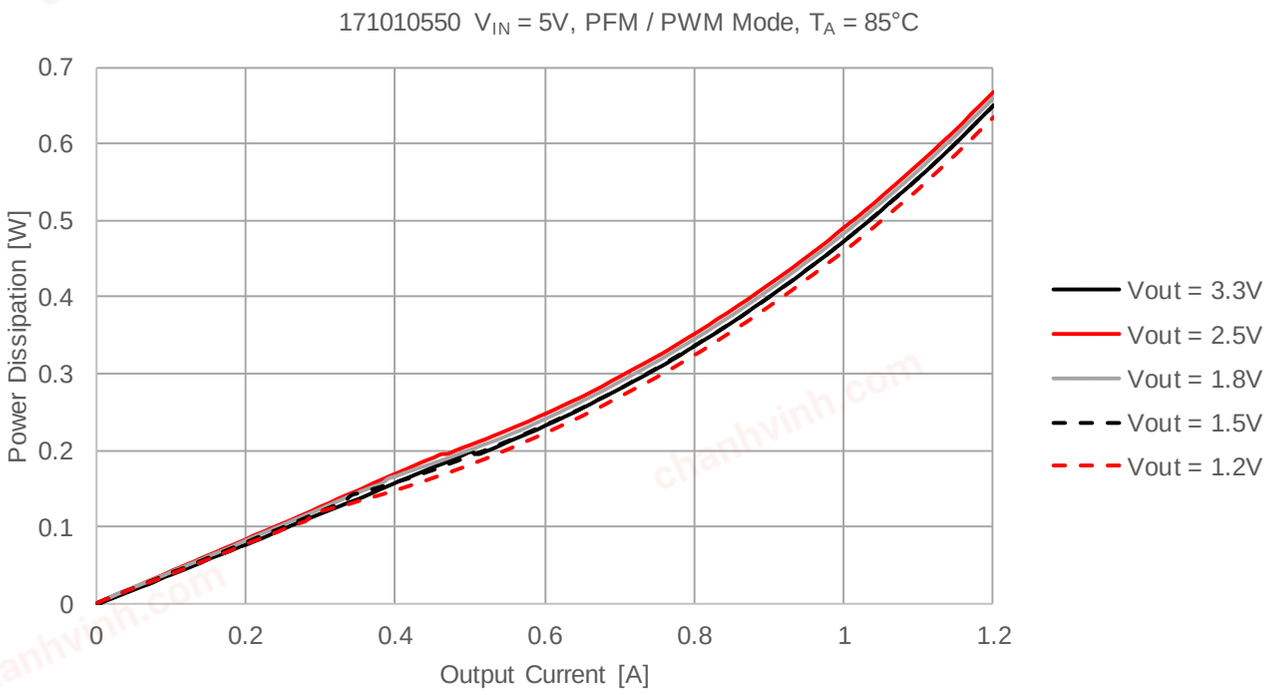

© July 2019

171010550

MagI³C Power Module
VDMM – Variable Step Down MicroModule

POWER DISSIPATION

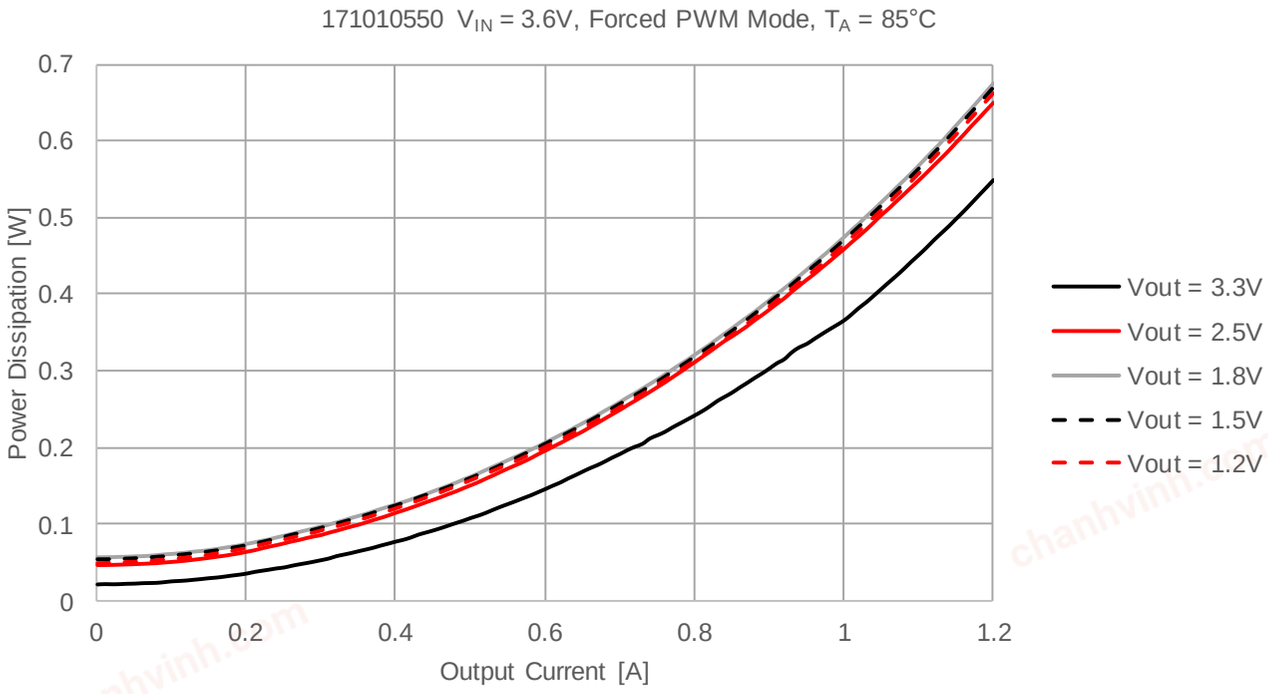

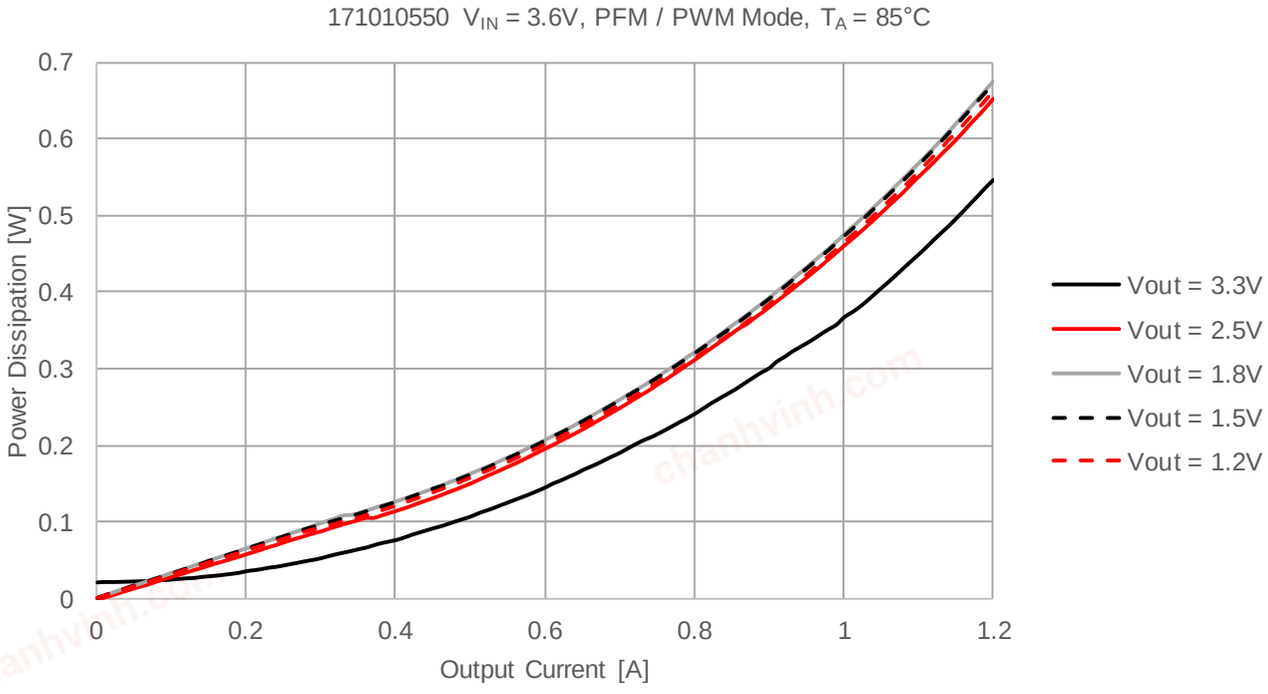

© July 2019

171010550

MagI³C Power Module
VDMM – Variable Step Down MicroModule

POWER DISSIPATION

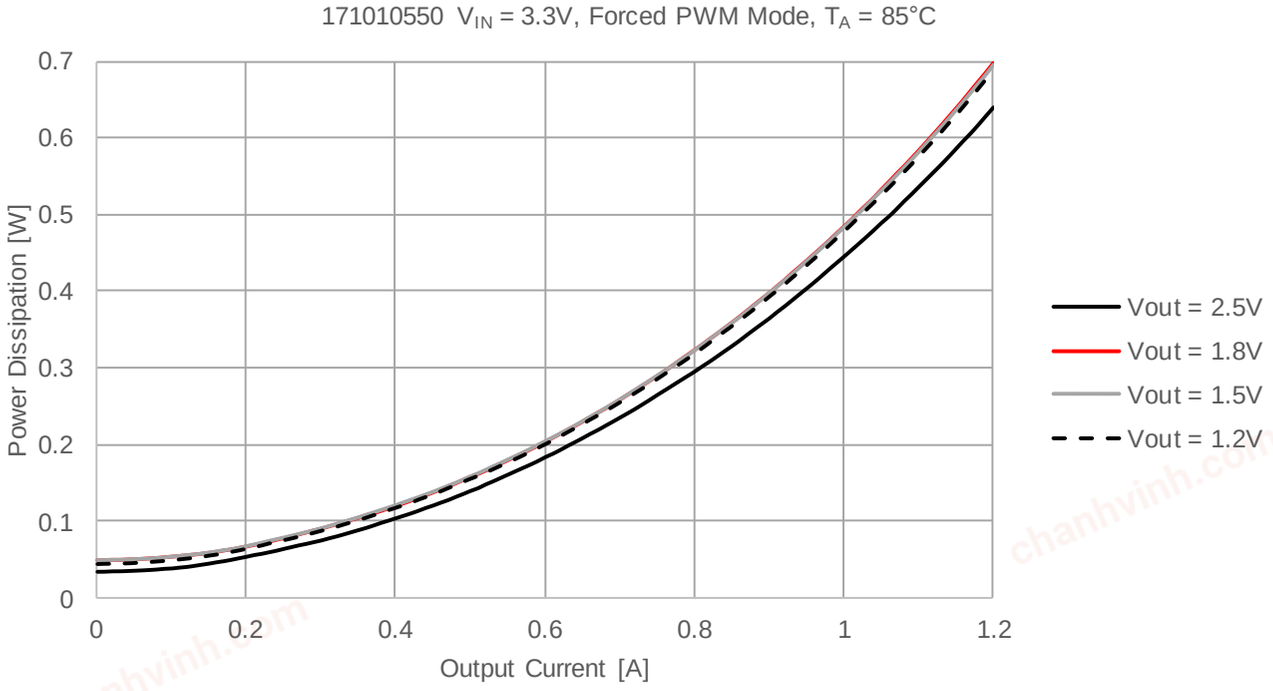

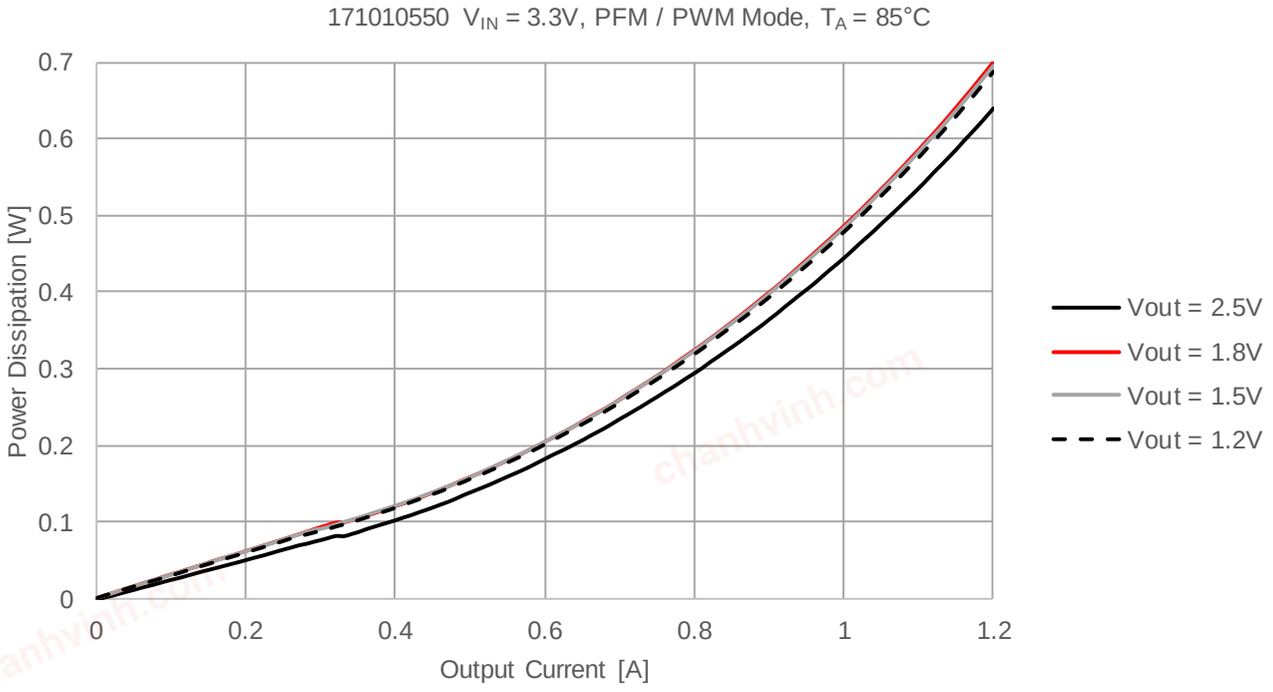

© July 2019

171010550

MagI³C Power Module
VDMM – Variable Step Down MicroModule

OUTPUT POWER DERATING

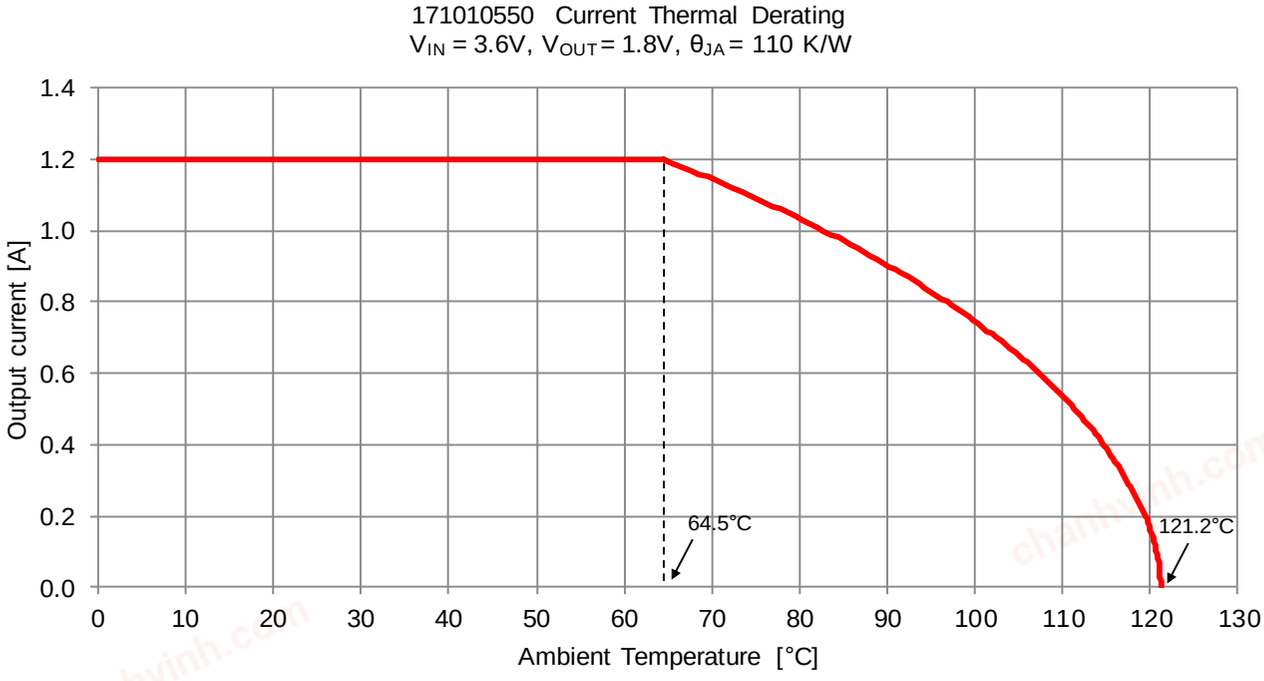

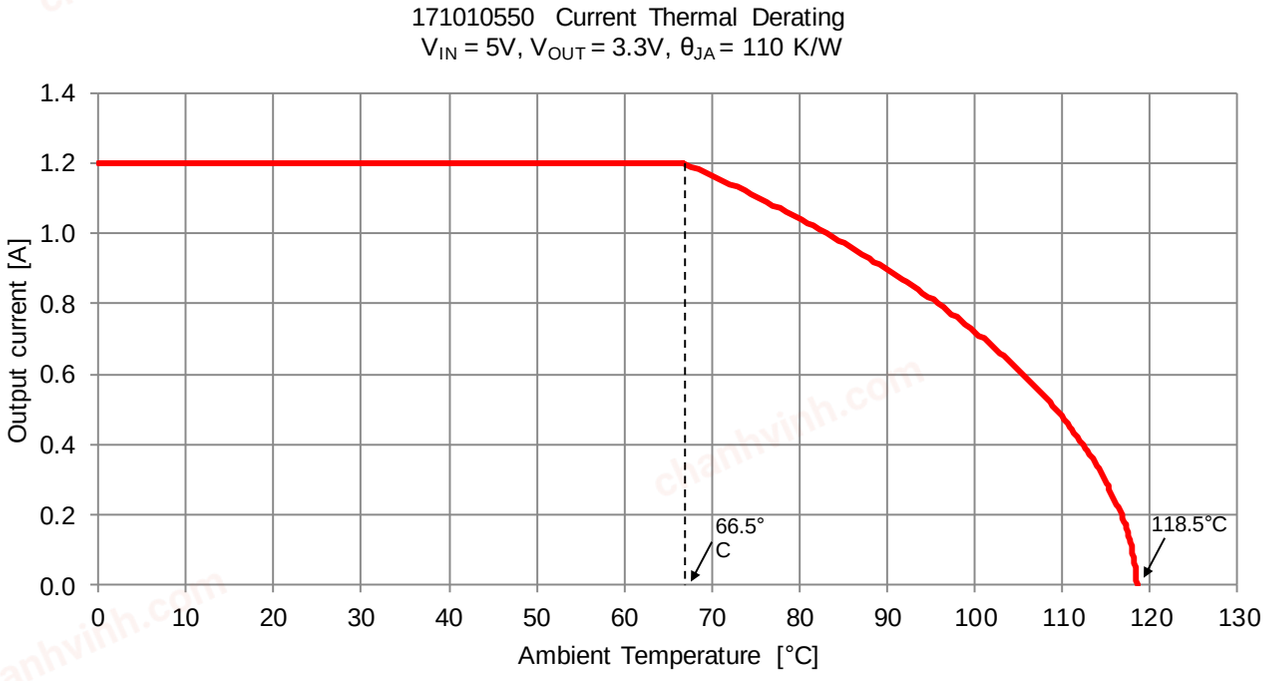

Note: Both thermal derating graphs were measured on the 178010550 evaluation board (40mm x 40mm, two layers, 35µm copper thickness). Please see T_A limits in Operating Conditions on page 4.

© July 2019

chanhvinh.com

171010550

MagI³C Power Module
VDMM – Variable Step Down MicroModule

LOAD REGULATION

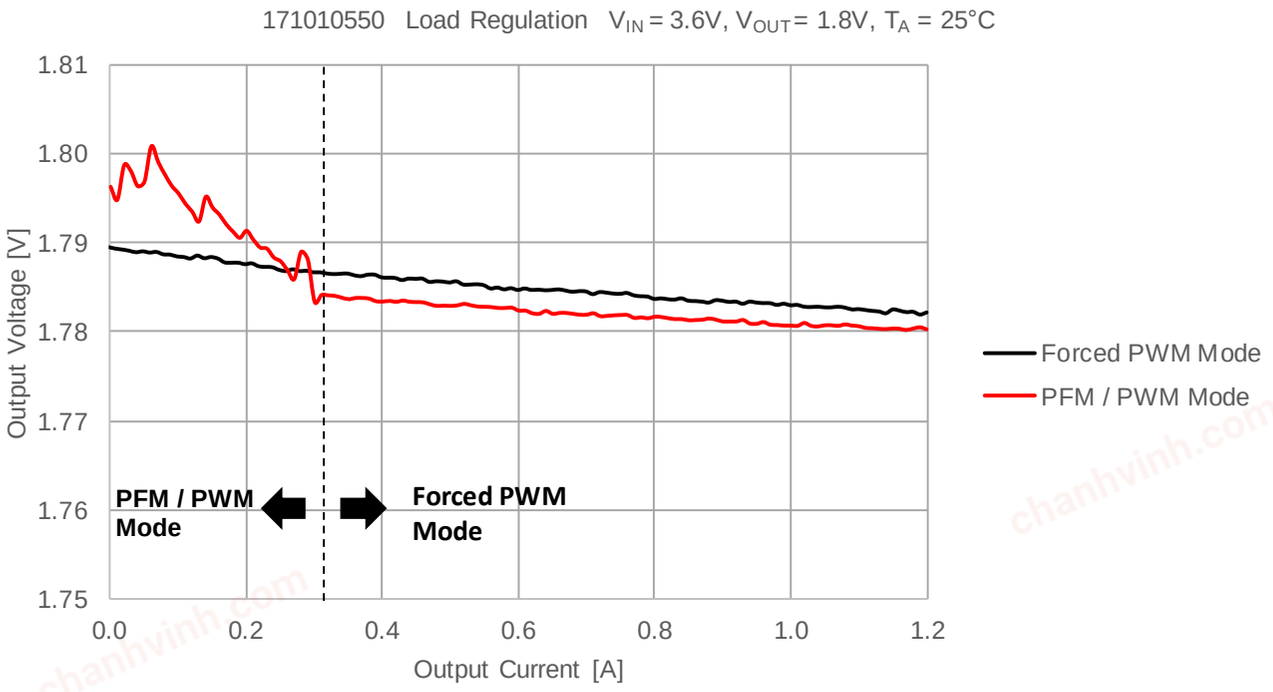

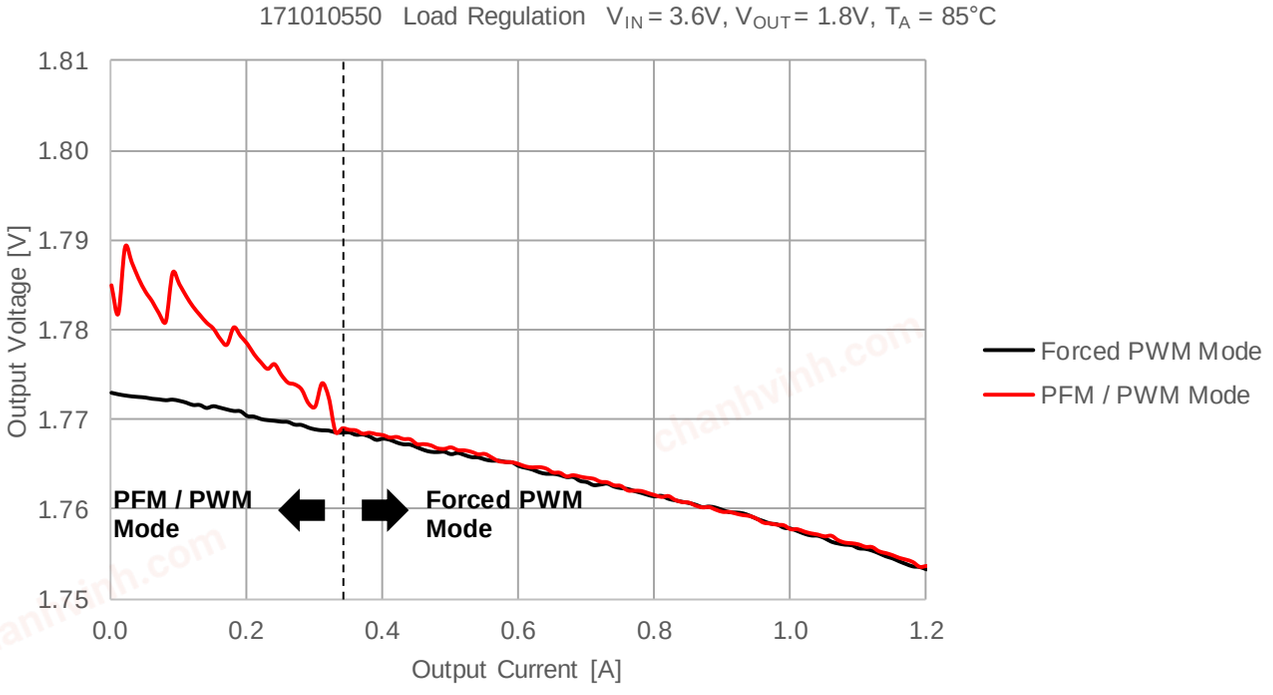

© July 2019

171010550

MagI³C Power Module
VDMM – Variable Step Down MicroModule

LINE REGULATION

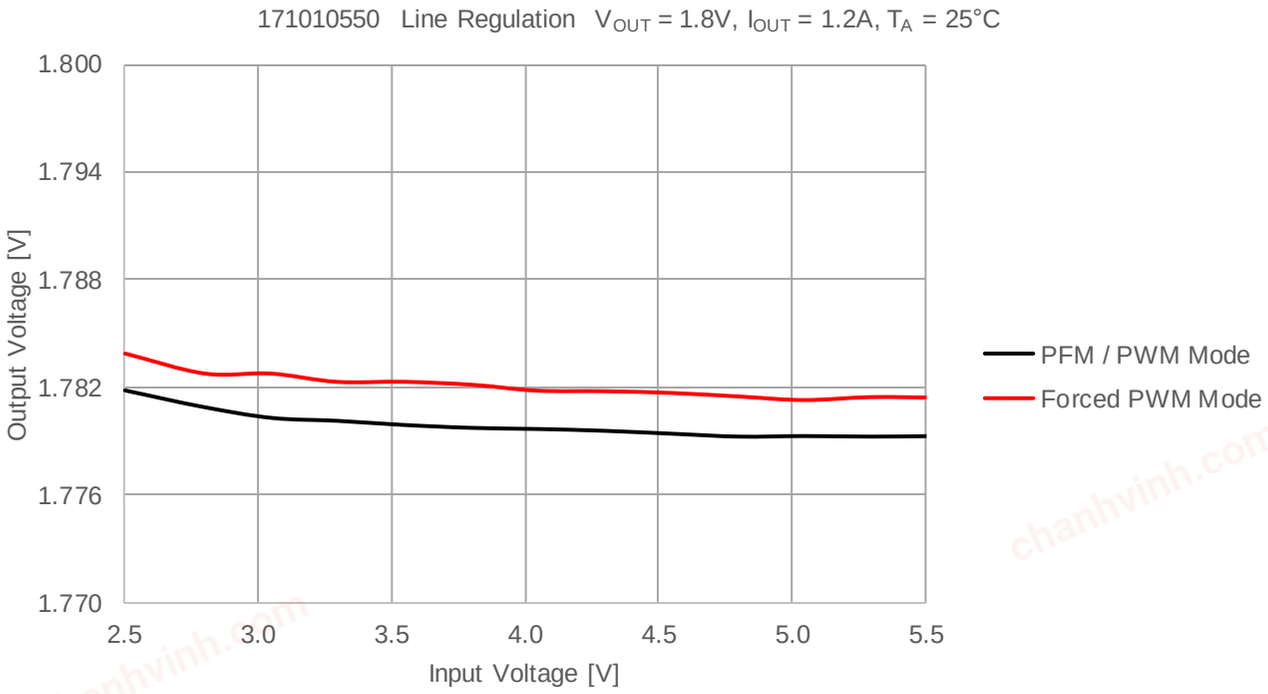

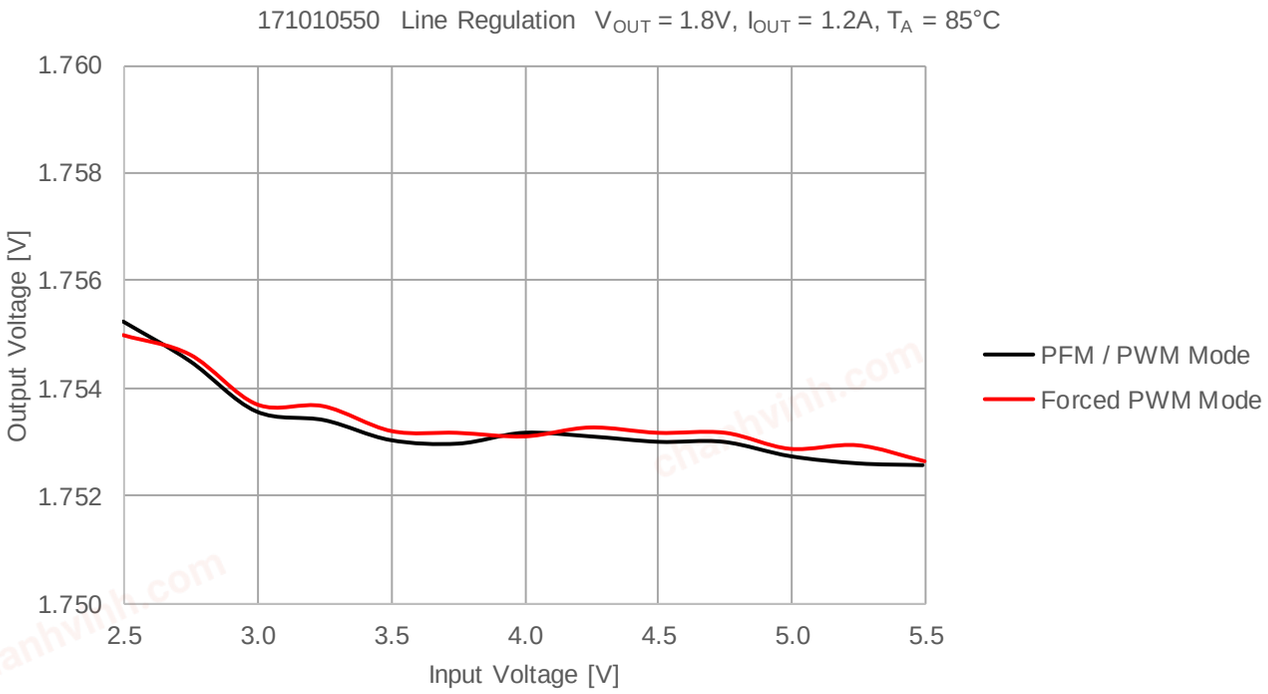

© July 2019

171010550

MagI³C Power Module
VDMM – Variable Step Down MicroModule

BLOCK DIAGRAM

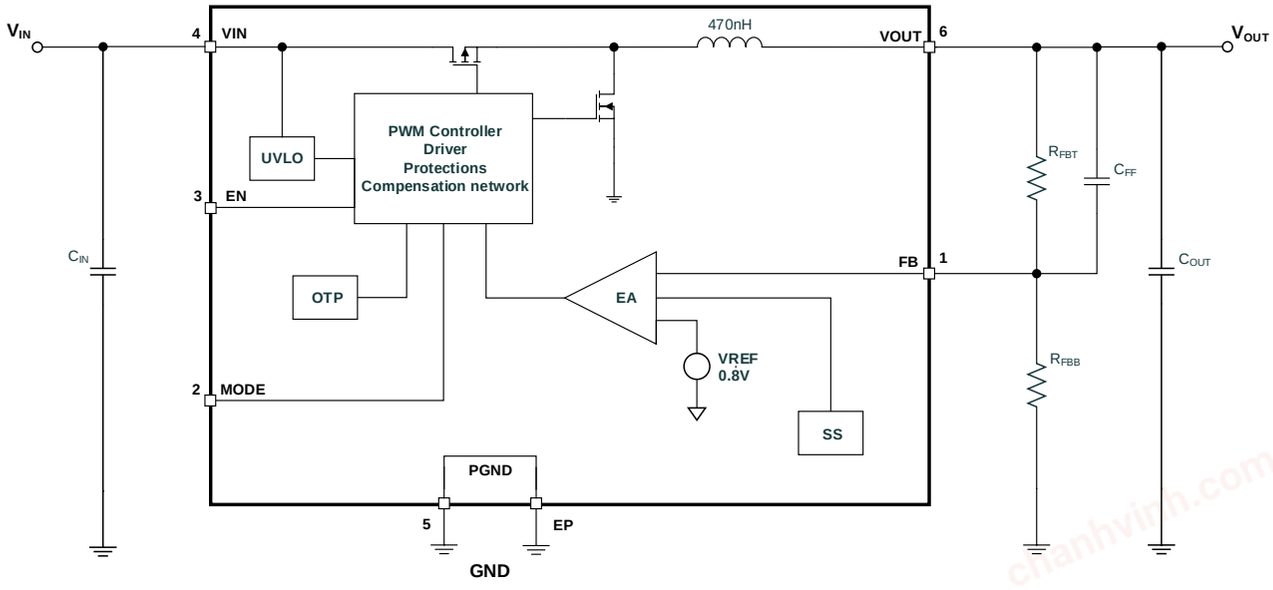

CIRCUIT DESCRIPTION

The MagI³C MicroModule 171010550 is a synchronous step down regulator with integrated MOSFETs, control circuitry and power inductor. The control scheme is based on a Constant On-Time (COT) regulation loop. An additional mode for light load operation can be engaged based on the condition applied to the MODE pin.

The V_{OUT} of the regulator is divided by the feedback resistor network R_{FBT} and R_{FBB} and fed into the FB pin. The internal comparator compares this signal with the internal 0.8V reference. If the feedback voltage is below the reference, the high side MOSFET is turned on for a fixed on-time.

The constant on-time control scheme does not require compensation circuitry which makes the overall design very simple. Nevertheless, it requires a certain minimum ripple at the feedback pin. The MagI³C Power Module 171010550 generates this ripple internally and is supported by the C_{FF} capacitor which bypasses AC ripple directly to the feedback pin from the output. With this architecture very small output ripple values under 10mV (similar to current or voltage mode devices) can be achieved.

© July 2019

chanhvinh.com

171010550

MagI³C Power Module
VDMM – Variable Step Down MicroModule

DESIGN FLOW

The next four simple steps will show how to select the external components to design the 171010550 application.

Essential Steps

1. Set output voltage
2. Select input capacitor
3. Select output capacitor
4. Select the feed-forward capacitor

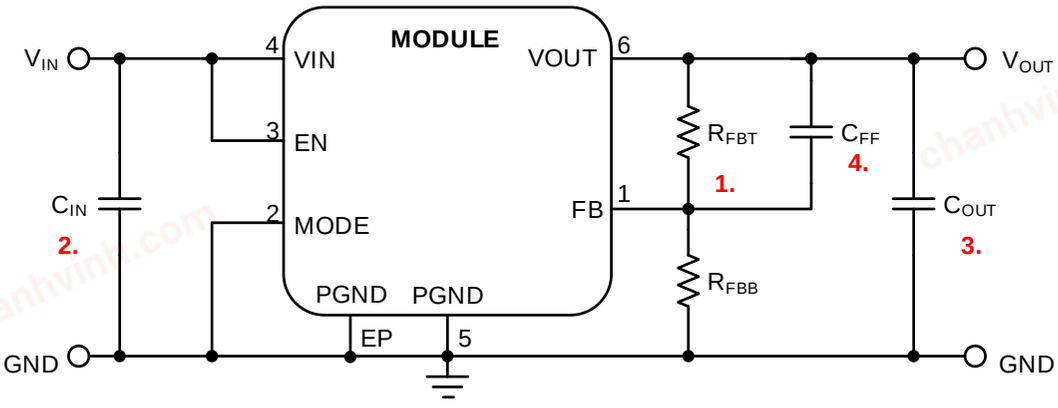

© July 2019

chanhvinh.com

171010550

MagI³C Power Module
VDMM – Variable Step Down MicroModule

Step 1 Setting the output voltage (V_{OUT})

The output voltage is selected with an external resistor divider between VOUT and GND (see circuit below). The voltage across the lower resistor of the divider is provided to the FB pin and compared with a reference voltage of 0.8V (V_{FB}). The output voltage adjustment range is from 0.8V to 5.5V. The output voltage can be calculated according to the following formula:

$$V_{OUT} = V_{FB} \cdot \left(\frac{R_{FBT}}{R_{FBB}} + 1\right) \quad (1)$$

One resistor must be chosen and then the other resistor can be calculated. For example, if R_{FBT} = 100kΩ then the resistance value of the lower resistor in the feedback network is indicated in the table below for common output voltages.

V_{OUT}	1.2V	1.5V	1.8V	2.5V	3.3V	3.6 V	4.2V
R_{FBB} (E96)	200kΩ	115kΩ	80.6kΩ	47.5kΩ	32.4kΩ	28.7kΩ	23.7kΩ

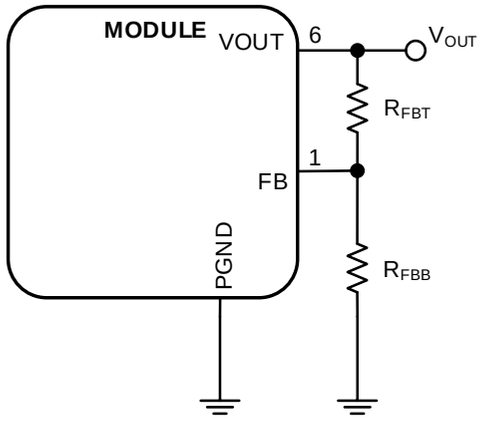

© July 2019

chanhvinh.com

171010550

MagI³C Power Module
VDMM – Variable Step Down MicroModule

Step 2 Select input capacitor (C_{IN})

The energy at the input of the MicroModule is stored in the input capacitor. An input capacitor (4.7µF) is required externally to provide cycle-by-cycle switching current and to support load transients. The external input capacitor must be placed directly at the VIN pin. For this MagI³C MicroModule it is recommended to use a MLCC (multi-layer ceramic capacitor) of 4.7µF. Attention must be paid to the voltage, frequency and temperature deratings of the selected capacitor.

Step 3 Select output capacitor (C_{OUT})

The output capacitor should be selected in order to minimize the output voltage ripple and to provide a stable voltage at the output. It also affects the loop stability. An external MLCC of 10µF is recommended for all application conditions. Attention must be paid to the voltage, frequency and temperature deratings of the selected capacitor.

In general, the output voltage ripple can be calculated using the following equation:

$$V_{OUT\ ripple} = \Delta I_L \cdot ESR + \Delta I_L \cdot \frac{1}{8 \cdot f_{SW} \cdot C_{OUT}} \quad (2)$$

where ΔI_L is the inductor current ripple and can be calculated with the following equation:

$$\Delta I_L = \frac{V_{OUT} \cdot (V_{IN} - V_{OUT})}{f_{SW} \cdot L \cdot V_{IN}} \quad (3)$$

Example

In the section OUTPUT VOLTAGE RIPPLE on page 35 a ripple measurement is shown under the following conditions:

V_{IN} = 3.6V
V_{OUT} = 1.8V
L = 470nH
f_{SW} = 4MHz
C_{OUT} = 10µF (external, Würth Elektronik, part number 885012107014)

Assuming a reduction of the capacitance of about 10% due to the bias voltage, a remaining capacitance of around 9µF can be considered. Another assumption can be done for the ESR, which can be considered lower than 5mΩ.
Using equations (2) and (3), the expected ripple is $V_{OUT\ ripple} \leq 2mV$, which matches the results obtained with the measurement.

© July 2019

171010550

MagI³C Power Module
VDMM – Variable Step Down MicroModule

Step 4 Select the feed-forward capacitor (C_{FF})

The 171010550 MagI³C Micromodule allows for the selection of a feed forward capacitor, C_{FF}, providing a trade-off between response time and efficiency while also affecting the transition current threshold between the PFM and PWM modes. A lower value of C_{FF} will increase the efficiency of the module at light load while slowing down the response time. Increasing the C_{FF} value will speed up the response time while decreasing efficiency. Increasing the value of C_{FF} results in higher values of current needed to leave PFM mode.
22pF has been evaluated experimentally as a value with suitable efficiency and transient characteristics for most applications.

The pictures below show the transient behavior of the 171010550 in response to a load transition from 0A to 1.2A using the recommended C_{FF} = 22pF, as well as other values of C_{FF}.
A higher value of C_{FF} helps to reduce the over and undershoot just after the load transitions at the expense of settling time. Conversely, a lower C_{FF} value will increase the overshoot and shorten the settling time.

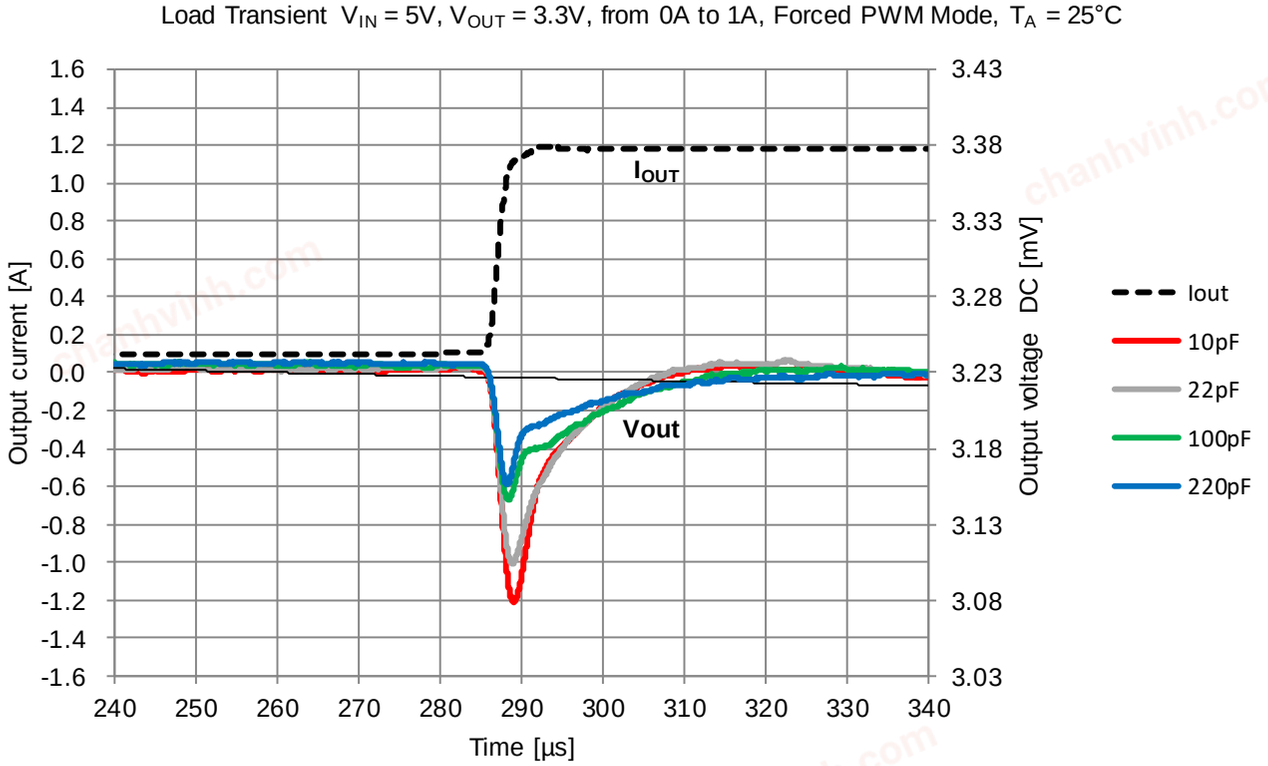

© July 2019

171010550

MagI³C Power Module
VDMM – Variable Step Down MicroModule

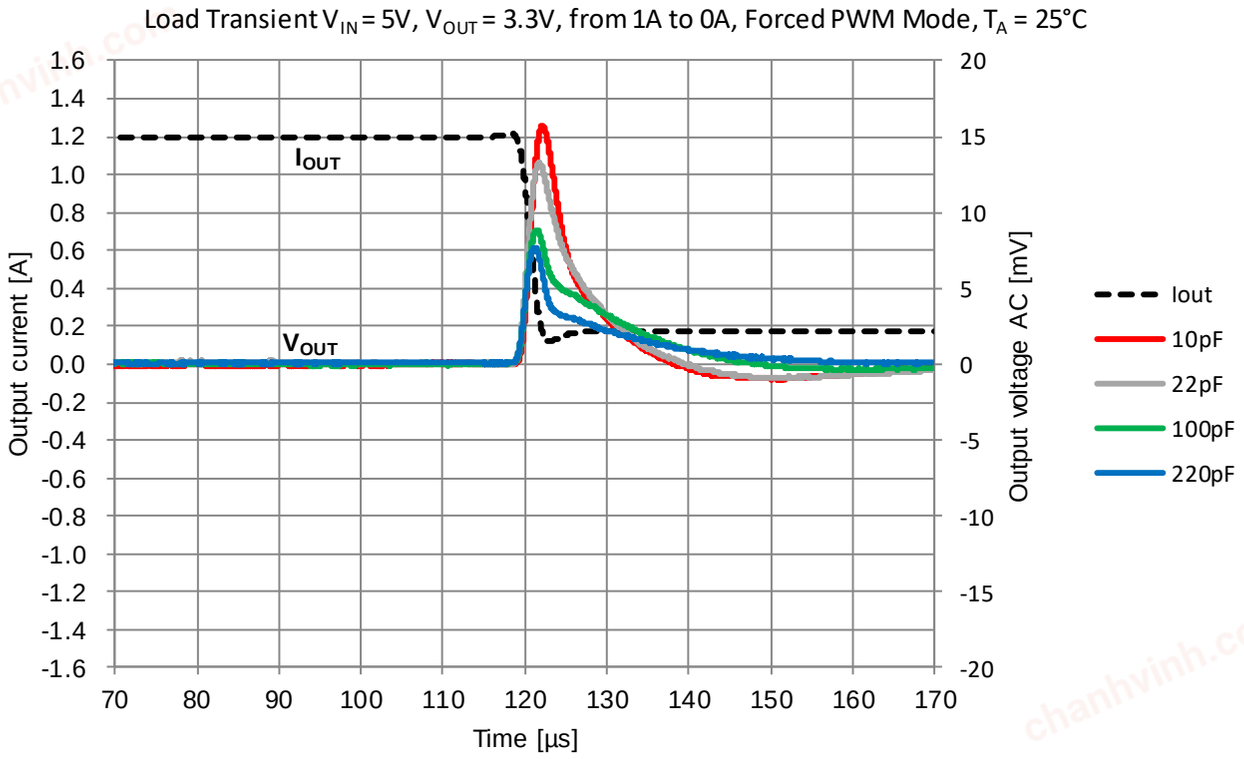

This behavior is valid only for this test under the specified conditions and must be verified in the real application.

The C_{FF} value only affects the efficiency during light load conditions when the PFM/PWM mode is chosen.
As explained in the section “PFM/PWM mode” on page 31, under light load operation while PFM/PWM mode is selected (MODE pin tied to GND) the device does not continuously switch, instead delivering energy to the load in bursts. The frequency between bursts is influenced by various parameters, including the C_{FF} value. The LIGHT LOAD OPERATION section provides a more in-depth explanation of the additional parameters which affect behavior in this region.

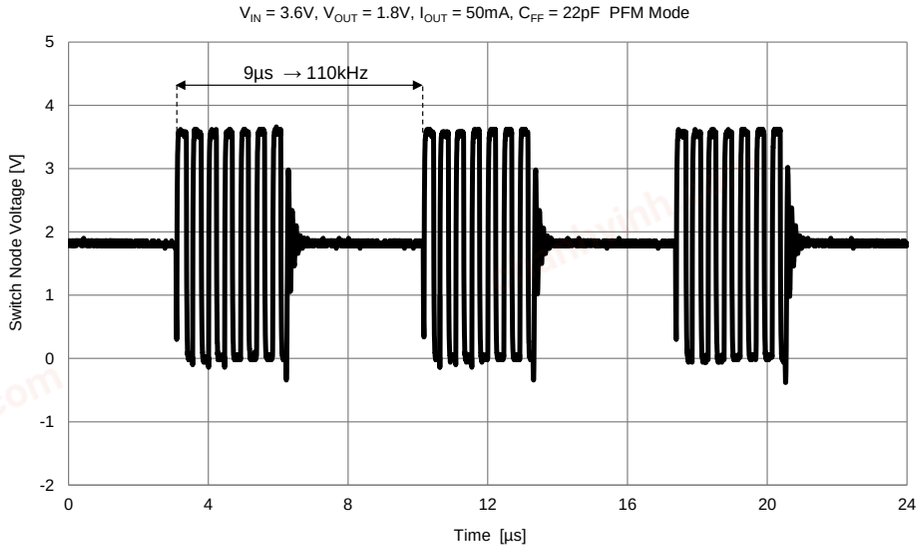

© July 2019

171010550

MagI³C Power Module
VDMM – Variable Step Down MicroModule

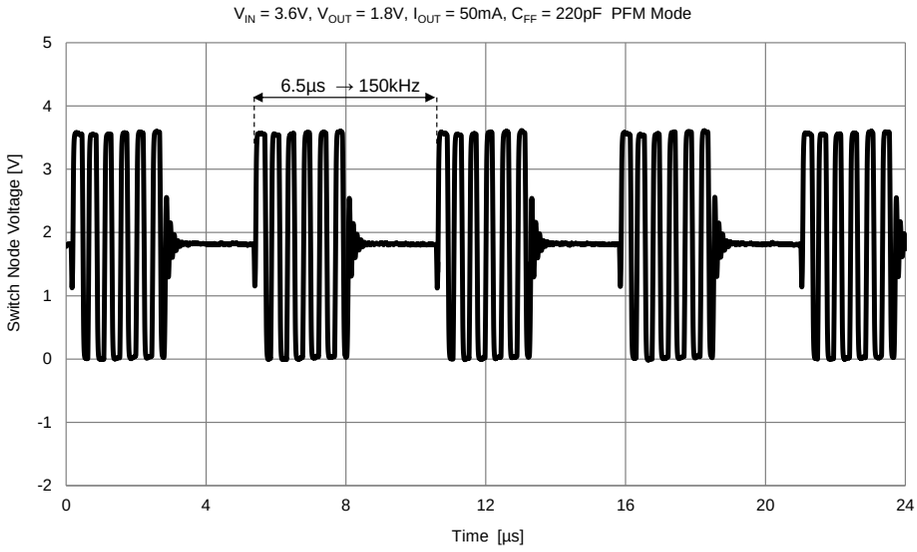

Increasing C_{FF} will cause the module to burst more often (shown in the two images above) resulting in a decrease in light load efficiency as depicted in the diagram below. In addition, increasing the C_{FF} value will result in an increase in the current threshold required to exit PFM mode, also shown below as a difference of almost 100mA.

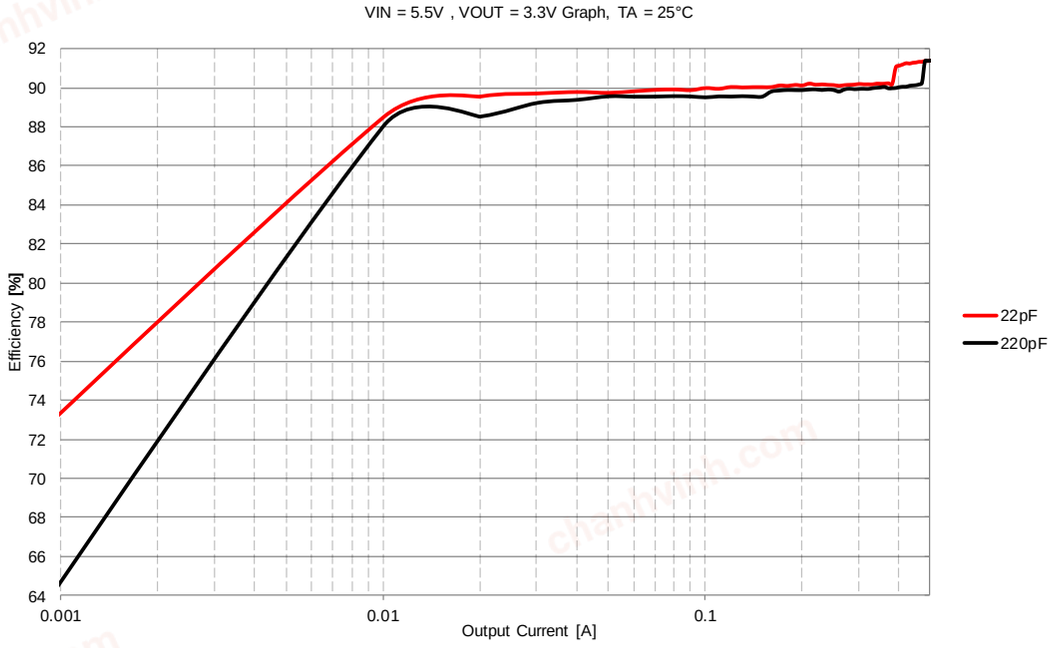

While the recommended C_{FF} value of 22pF will work for most applications, the user can adjust the performance of the module based on their application by trading between light load efficiency and transient response. This customization tailors the behavior of the module to the application's needs.

© July 2019

171010550

MagI³C Power Module
VDMM – Variable Step Down MicroModule

MODES OF OPERATION

The MODE pin of the 171010550 can be pulled either high or low to alter the light load performance of the module based on the application requirements.

Forced PWM mode

Pulling the MODE pin high selects the forced PWM mode. In this mode the device constantly functions in PWM mode, switching at the default 4 MHz fixed switching frequency, independently of the load (see figure below). This mode of operation eases the filtering requirements to help with noise sensitive applications.

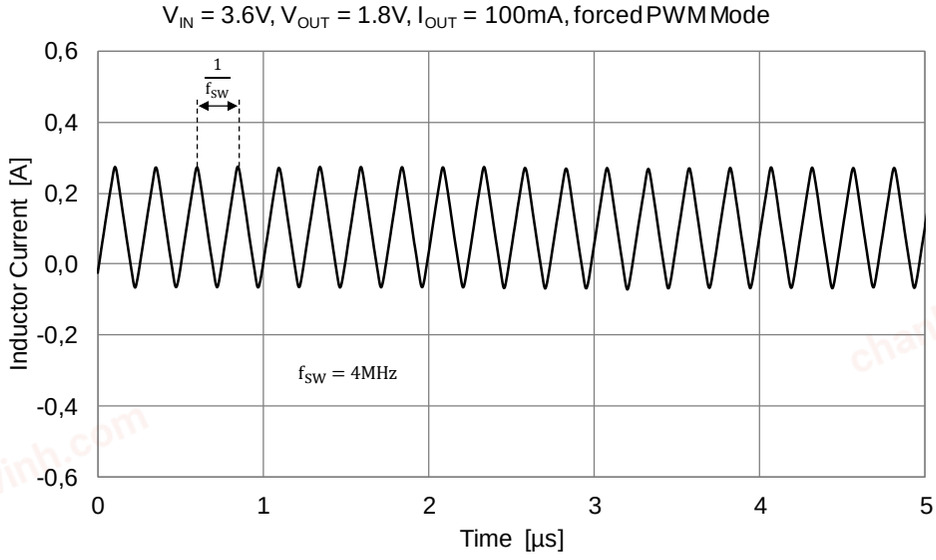

Behavior at varying input voltages

During PWM operation, if the duty cycle is under a certain value, typically 76%, the module controls the off-time based on the feedback ripple compared to an internal reference that utilizes the inductor ripple. The on-time is fixed and depends on V_{IN} and V_{OUT} as well as the fixed switching frequency of 4MHz, as indicated by the following equation:

$$ton = \frac{Vout}{Vin * fsw} \quad (4)$$

When the input voltage decreases (such as with a discharging battery) the duty cycle will increase to deliver the same amount of power to the load. When the duty cycle reaches a critical point, typically 76%, the module transitions to a fixed off-time mode where it controls the low-side switch using the feedback ripple and internal comparator, keeping the low-side switch off for a fixed 60ns and varying the on-time to meet the duty cycle requirements and output voltage. This results in a decrease of switching frequency as the duty cycle continues to increase.

If the input voltage decreases further and the difference between the input voltage and output voltage is not significantly large, such that the duty cycle approaches 100% operation, the module enters a drop-out mode of operation, leaving the high-side switch on continuously and regulating the output voltage using the combined DC resistance of the high-side switch and the integrated inductor.

© July 2019

171010550

MagI³C Power Module
VDMM – Variable Step Down MicroModule

PFM/PWM mode

Setting the MODE pin low selects the PFM/PWM mode. This mode provides a much higher efficiency at light loads (shown in the picture below) by using PFM mode to save energy.

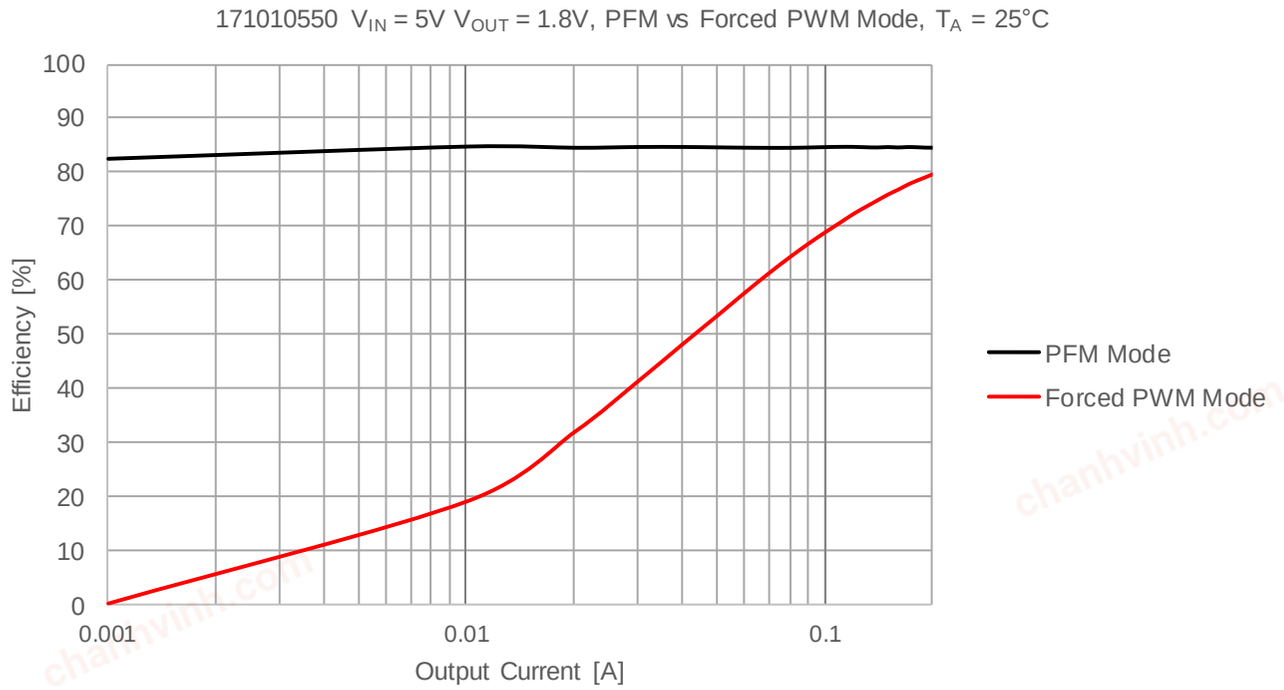

During PFM mode the module delivers energy in short bursts to the load (see the figure below). Within each burst the device switches at the default switching frequency and the energy is delivered to both the load and the output capacitor. In between bursts, the device experiences a period where both the high side and low side switches are in an off state. The load demands are supplied exclusively by the output capacitor during this time and the current consumption of the device drops dramatically until the feedback system triggers the next cycle. This behavior results in higher efficiency than traditional PWM operation can deliver.

© July 2019

171010550

MagI³C Power Module
VDMM – Variable Step Down MicroModule

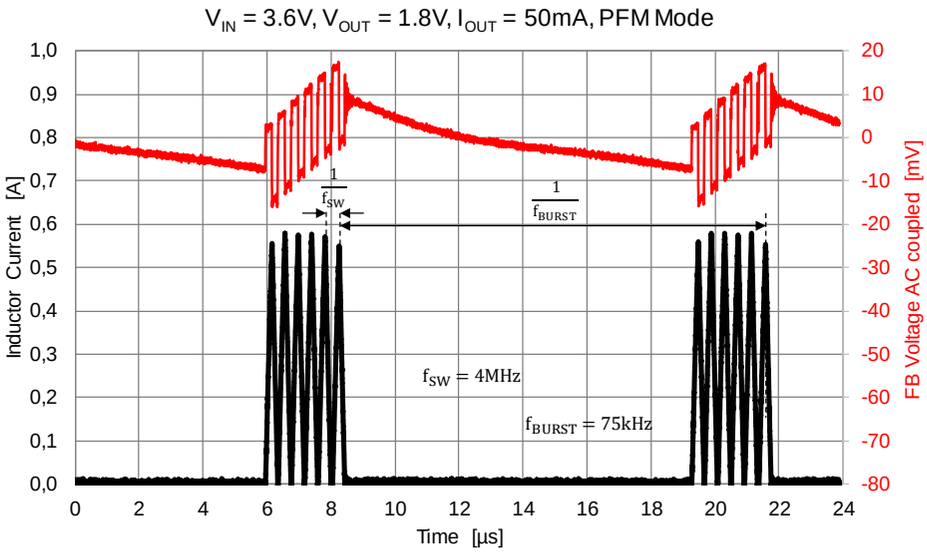

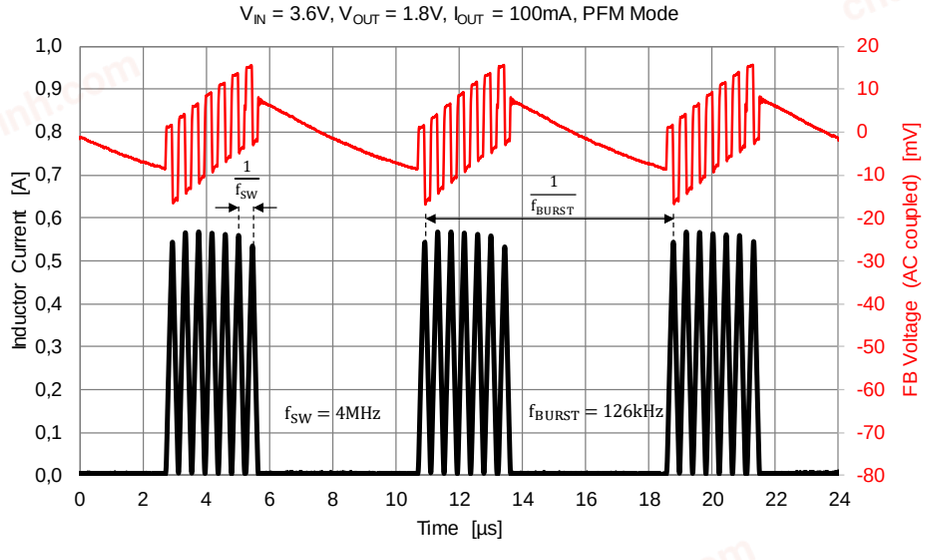

Please consider that the dead times shown above are examples and measured values are heavily dependent on several parameters including the output capacitor, routing techniques, distance between the output capacitor and load, and the feed-forward capacitor.

The device transitions from PFM to PWM mode automatically when the dead time approaches zero, resuming constant switching behavior at the default switching frequency of 4MHz.

© July 2019

chanhvinh.com
more than you expect

OUTPUT VOLTAGE RIPPLE

The output voltage ripple is also influenced by the selection of the MODE pin. If the forced PWM mode is selected and the duty cycle is below 76%, the ripple is very low and it always has the same frequency as the internal oscillator (4 MHz). If the PFM/PWM mode is selected and the load current is low enough to be in the PFM mode of operation or if the duty cycle is high enough to enter the constant off-time mode of operation then the output voltage ripple will be higher and the frequency lower than the nominal switching frequency (see pictures below).

Ripple in PFM/PWM mode

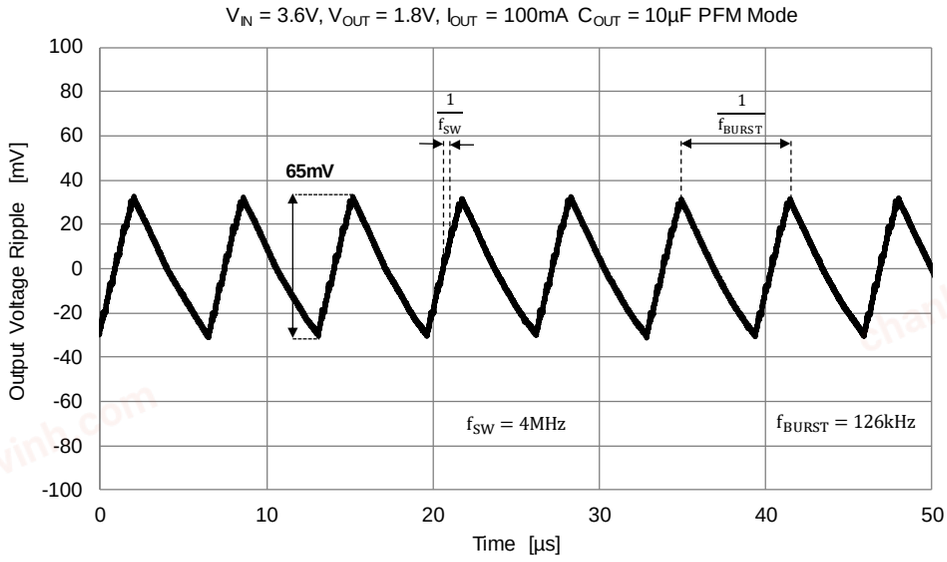

Ripple in forced PWM mode

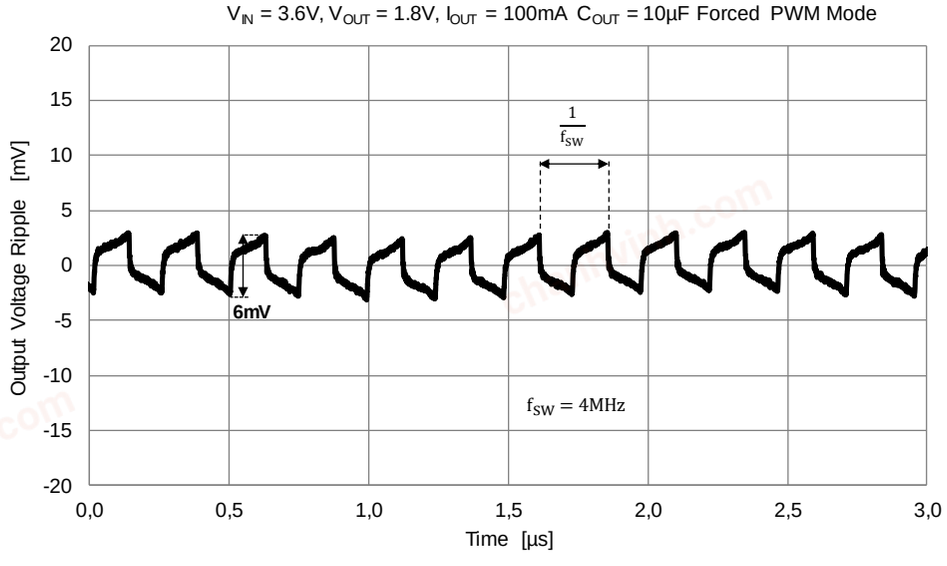

© July 2019

171010550

MagI³C Power Module
VDMM – Variable Step Down MicroModule

PROTECTIVE FEATURES

Overcurrent protection (OCP)

For protection against load faults, the MagI³C MicroModule incorporates a cycle-by-cycle current limiting (see I_{OCP} in “Electrical Specification” on page 5). During switching, the output current is limited by turning off the high-side switch when the current limit value is detected. This switching behavior continues, limiting the on-time of the device until the overcurrent condition is removed. When the overcurrent condition is removed normal switching times resumes. The output voltage is reduced to zero until the current no longer exceeds the limit.

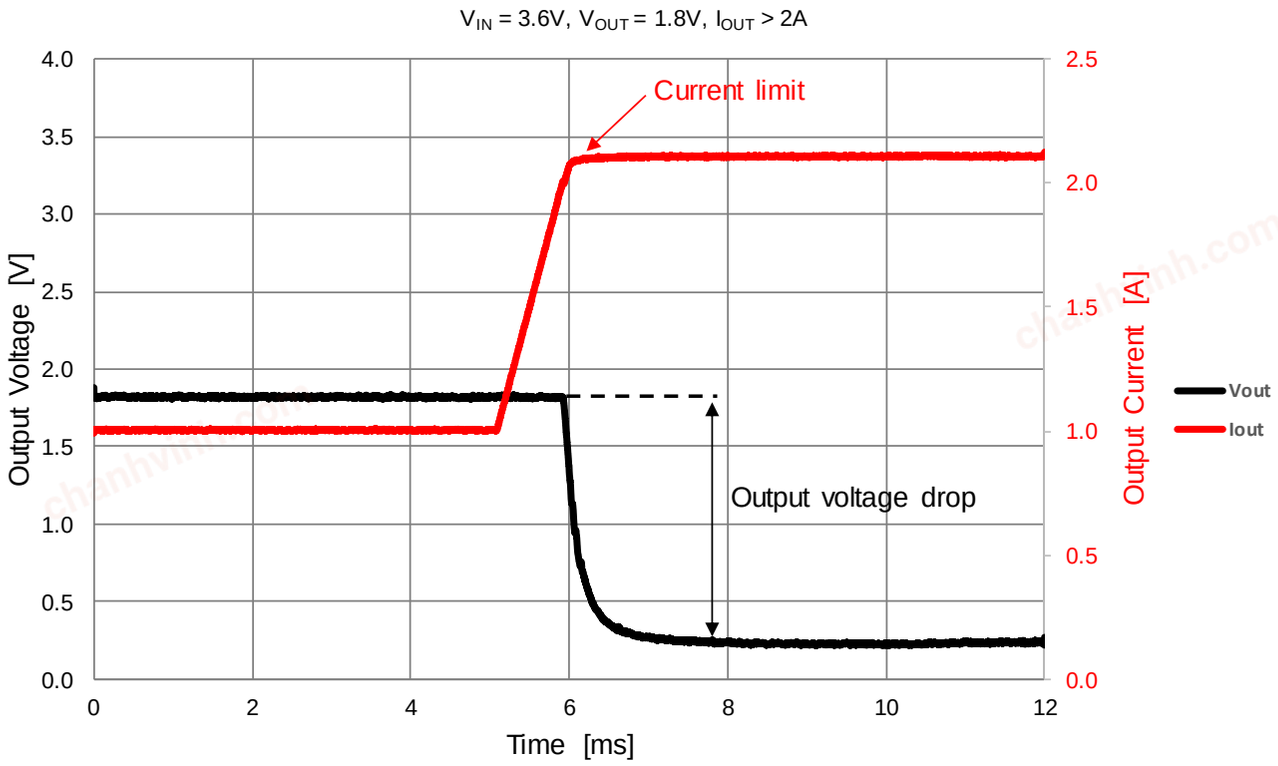

© July 2019

171010550

MagI³C Power Module
VDMM – Variable Step Down MicroModule

Short-circuit protection (SCP)

When the MagI³C MicroModule experiences a short-circuit condition at the output it will limit the current, typically to 2.2A, until the thermal protection circuit shuts the module off. If the short-circuit condition is removed, normal switching operation will begin if the module temperature is not exceeding the thermal shutdown threshold.

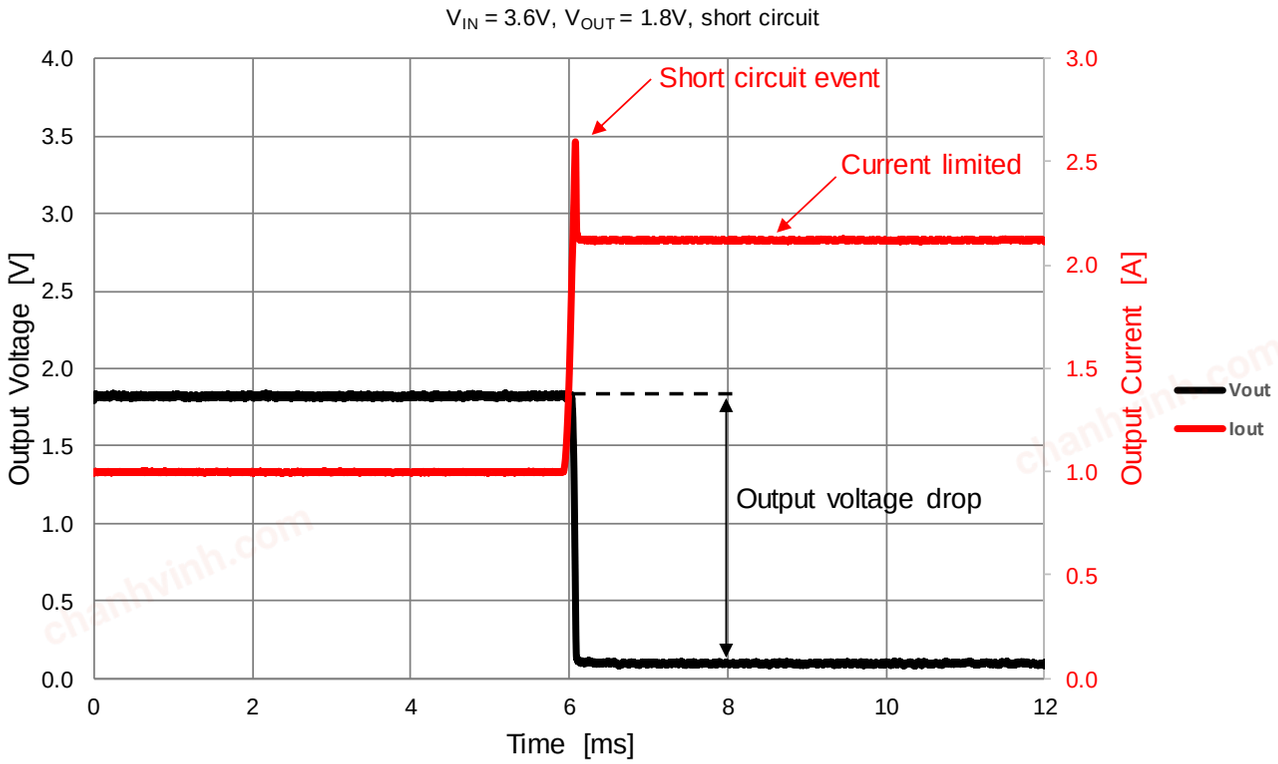

© July 2019

171010550

MagI³C Power Module
VDMM – Variable Step Down MicroModule

Over temperature protection (OTP)

Thermal protection helps prevent catastrophic failures due to accidental device overheating. The junction temperature of the MagI³C MicroModule should not be allowed to exceed its maximum ratings. Thermal protection is implemented by an internal thermal shutdown circuit, which activates when the junction temperature reaches 160°C (typ). Under the thermal shutdown condition both MOSFETs remain off causing V_{OUT} to drop. When the junction temperature falls below 150°C the internal soft-start is released, V_{OUT} rises smoothly, and normal operation resumes.

Input undervoltage lockout

The device incorporates undervoltage lockout (UVLO) to protect unexpected behavior at input voltages below the recommended values. The thresholds of the UVLO are indicated in the Electrical Specifications on page 5.

Soft-Start

The 171010550 implements an internal soft-start in order to limit the inrush current and avoid output voltage overshoot during start-up. The typical duration of the soft-start is around 100µs (see figure below).

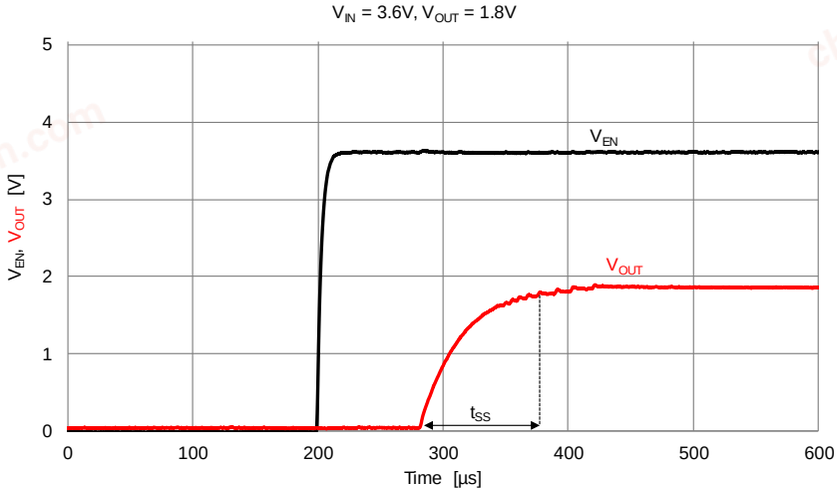

Enable

The 171010550 MagI³C MicroModule is enabled by setting the pin EN high. After setting EN high the module prepares for operation, a process which takes roughly 100µsec. Once prepared, the module begins switching and the internal soft-start regulates the output voltage rise until the desired output voltage is met allowing normal operation to take place.

© July 2019

chanhvinh.com

171010550

MagI³C Power Module
VDMM – Variable Step Down MicroModule

LAYOUT RECOMMENDATION

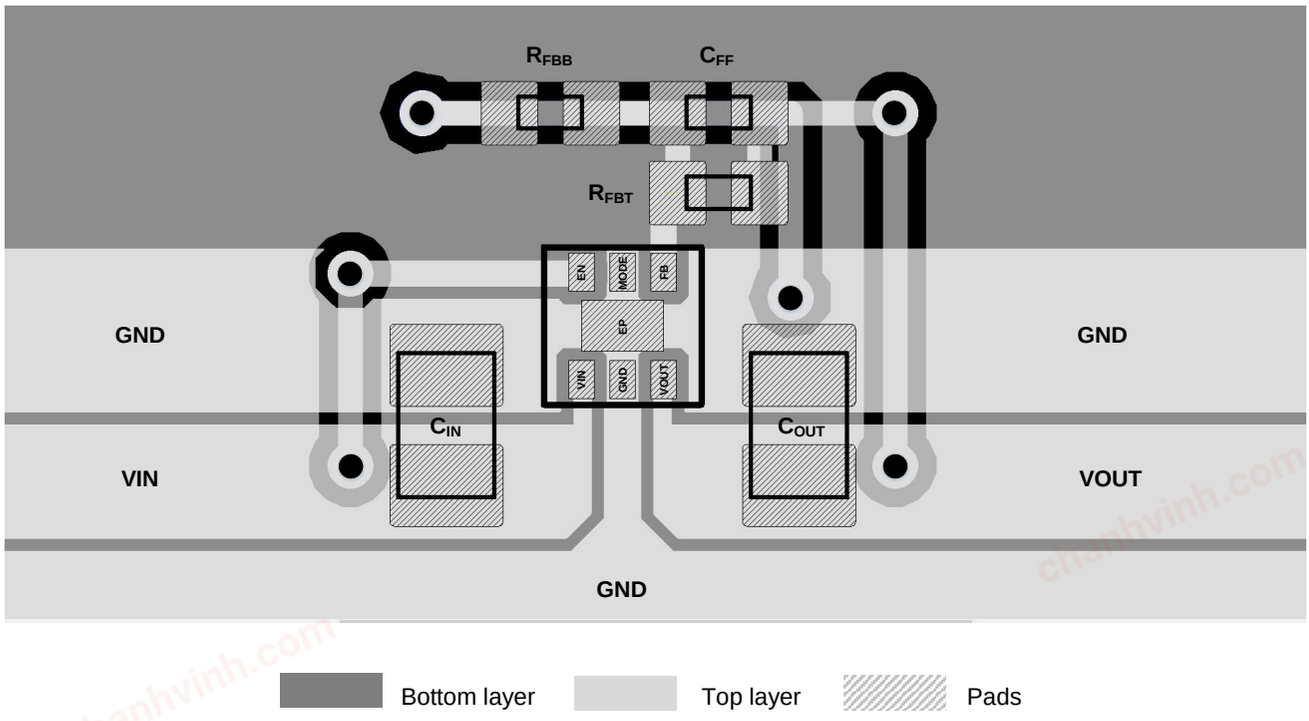

The picture above shows a possible layout for the 171010550 MagI³C MicroModule. Nevertheless, some recommendations should be followed when designing the layout:

1. The input and output capacitors should be placed as close as possible to the VIN and VOUT pins of the device.
2. The feedback resistor divider should be placed as close as possible to the FB pin
3. Pins 5 and 2 (EN and MODE respectively) must be always connected to either V_{IN} or ground and they cannot be left floating (an example is shown in the layout depicted above, where EN and MODE pins are respectively connected to V_{IN} and ground).
4. Avoid placing vias in any of the pads for this module. Due to the small size of the pads, significant amounts of solder can be pulled through the vias during heating resulting in incomplete connections between the module and board.

© July 2019

chanhvinh.com
more than you expect

171010550

MagI³C Power Module
VDMM – Variable Step Down MicroModule

EVALUATION BOARD SCHEMATIC

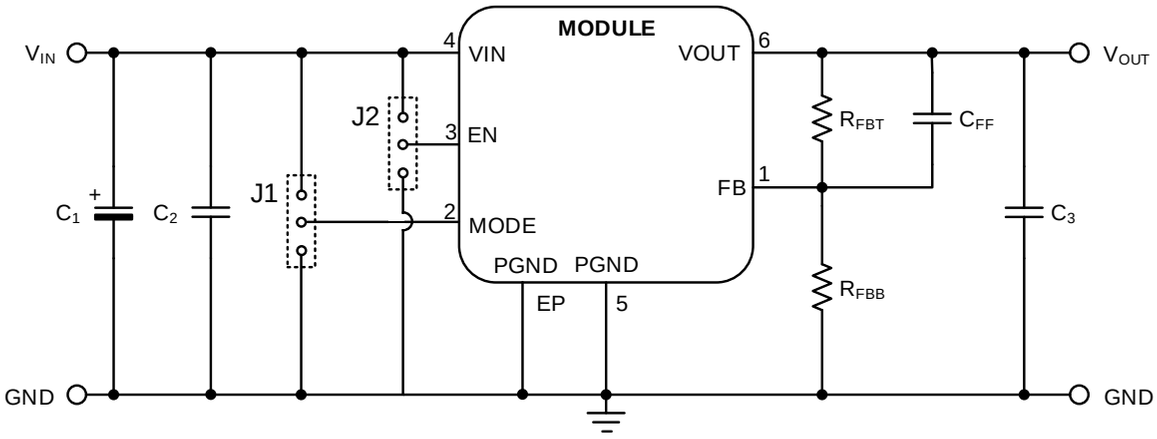

Operational Requirements

The additional aluminum polymer capacitor C1 is only for evaluation board protection purposes. It is mounted at the termination of the supply line and provides slight damping of possible oscillations of the series resonance circuit represented by the inductance of the supply line and the input capacitance. It is not essential for operation but will provide better performance in a testing environment.

Bill of Material

Designator	Description		Quantity	Order Code	Manufacturer
U1	MagI³C MicroModule		1	171010550	Würth Elektronik
C_1	Aluminum Polymer Capacitor 220µF/10V		1	875105244013	Würth Elektronik
C_2	Ceramic chip capacitor 4.7µF/16V X5R, 0805		1	885012107018	Würth Elektronik
C_3	Ceramic chip capacitor 10µF/16V X5R, 0805		1	885012107014	Würth Elektronik
	Ceramic chip capacitor 10µF/10V X5R, 0805(*)			885012107010	Würth Elektronik
C_{FF}	Ceramic chip capacitor 22pF/10V NP0, 0402		1	885012005009	Würth Elektronik
R_{FBT}	100 kΩ		1		
R_{FBB}	Set by jumper	open for V_{OUT} = 0.8V			
		402 kΩ for V_{OUT} = 1.0V	1		
		200 kΩ for V_{OUT} = 1.2V	1		
		115 kΩ for V_{OUT} = 1.5V	1		
		80.6 kΩ for V_{OUT} = 1.8V	1		
		47 kΩ for V_{OUT} = 2.5V	1		
		32.4 kΩ for V_{OUT} = 3.3V	1		
		To be soldered for adjustable output voltage $R_{FBB} = \frac{R_{FBT}}{\frac{V_{OUT}}{V_{FB}} - 1}$			
J1	Jumper for MODE connection to either VIN (Forced PWM) or GND (PFM/PWM)		1	61300311121	
J2	Jumper for EN connection to either VIN (device enabled) or GND (device disabled)		1	61300311121	
J3	Jumper for output voltage selection. Only one resistor should be selected at a time		1	61301621121	

(*) alternative recommended part

© July 2019

171010550

MagI³C Power Module
VDMM – Variable Step Down MicroModule

HANDLING RECOMMENDATIONS

1. The power module is classified as MSL3 (JEDEC Moisture Sensitivity Level 3) and requires special handling due to moisture sensitivity (JEDEC J-STD033).
2. The parts are delivered in a sealed bag (Moisture Barrier Bags = MBB) and should be processed within one year.
3. When opening the moisture barrier bag check the Humidity Indicator Card (HIC) for color status. Bake parts prior to soldering in case indicator color has changed according to the notes on the card.
4. Parts must be processed after 168 hour (7 days) of floor life. Once this time has been exceeded, bake parts prior to soldering per JEDEC J-STD033 recommendation.

SOLDER PROFILE

1. Only Pb-Free assembly is recommended according to JEDEC J-STD020.
2. Measure the peak reflow temperature of the MagI³C MicroModule in the middle of the top view.
3. Ensure that the peak reflow temperature does not exceed 235°C ±5°C as per JEDEC J-STD020.
4. The reflow time period during peak temperature of 235°C ±5°C must not exceed 20 seconds.
5. Reflow time above liquidus (217°C) must not exceed 90 seconds.
6. Maximum ramp up is rate 3°C per second.
7. Maximum ramp down rate is 3°C per second.
8. Reflow time from room (25°C) to peak must not exceed 8 minutes as per JEDEC J-STD020.
9. **Maximum numbers of reflow cycles is three.**
10. **For minimum risk, solder the module in the last reflow cycle of the PCB production.**
11. For soldering process please consider lead material copper (Cu) and lead finish tin (Sn).
12. For solder paste use a LFM-48W or Indium based SAC 305 alloy (Sn 96.5 / Ag 3.0 / Cu 0.5 / Indium 8.9HF / Type 3 / 89%) type 3 or higher.
13. The profile shown below is valid for convection reflow only.
14. Other soldering methods (e.g.vapor phase) are not verified and have to be validated by the customer at their own risk.

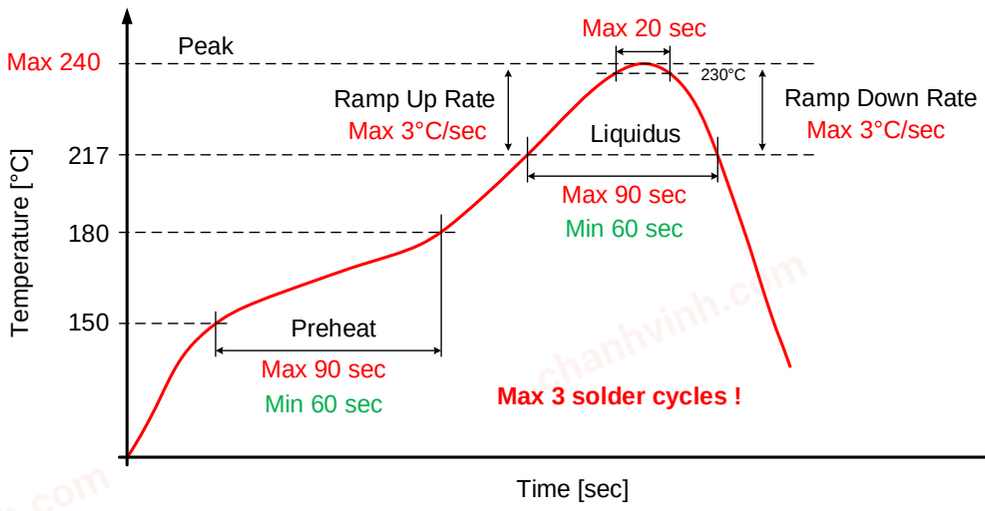

© July 2019

chanhvinh.com

171010550

MagI³C Power Module
VDMM – Variable Step Down MicroModule

PHYSICAL DIMENSIONS

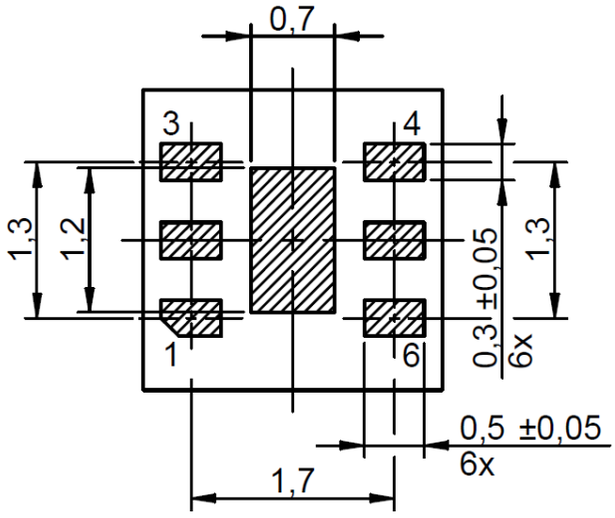

Bottom view
All dimensions in mm, tolerances ±0.1mm

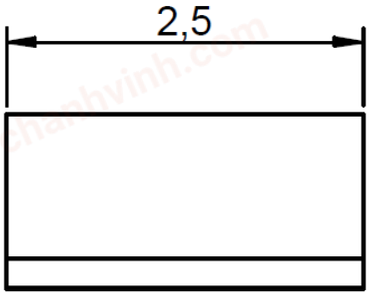

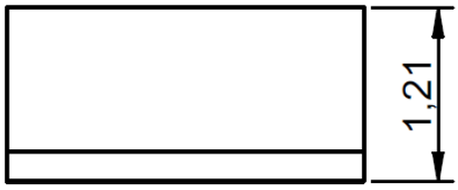



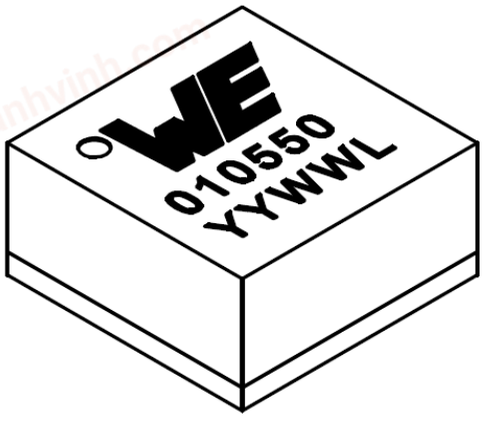

All dimensions in mm

© July 2019

chanhvinh.com

171010550

MagI³C Power Module
VDMM – Variable Step Down MicroModule

EXAMPLE FOOTPRINT DESIGN

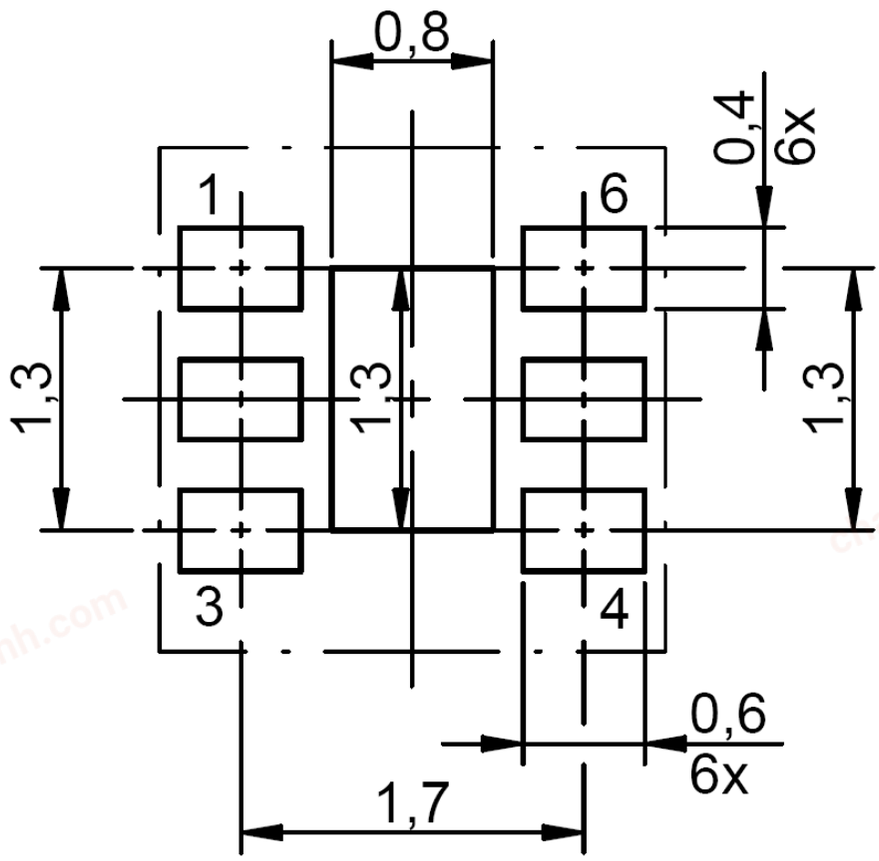

All dimensions in mm

© July 2019

171010550

MagI³C Power Module
VDMM – Variable Step Down MicroModule

PACKAGING

Reel (mm)

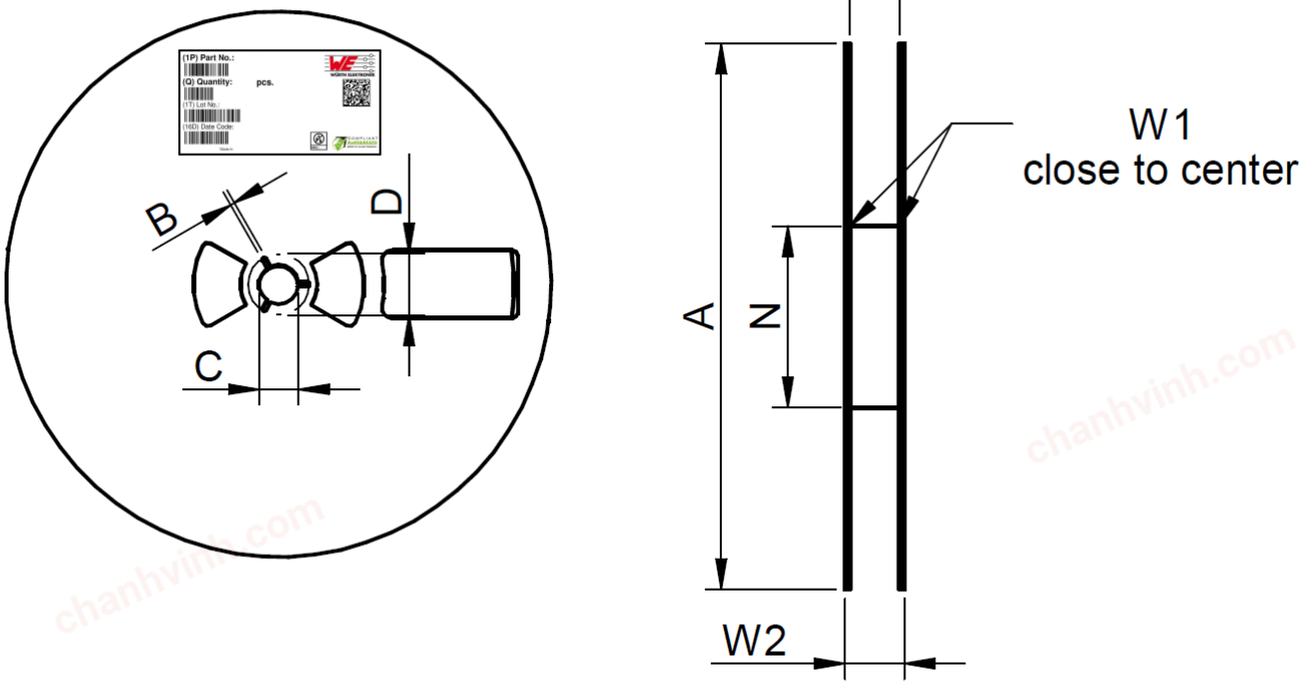

A	B	C	D	N	W1	W2	W3	W3	Material
±1,0	±0,5	±0,5	Min.	±0,5	+2,0	Max.	Min.	Max.	
178,00	2,20	13,00	20,20	60,00	12,40	18,40	11,90	15,40	Polystyrene

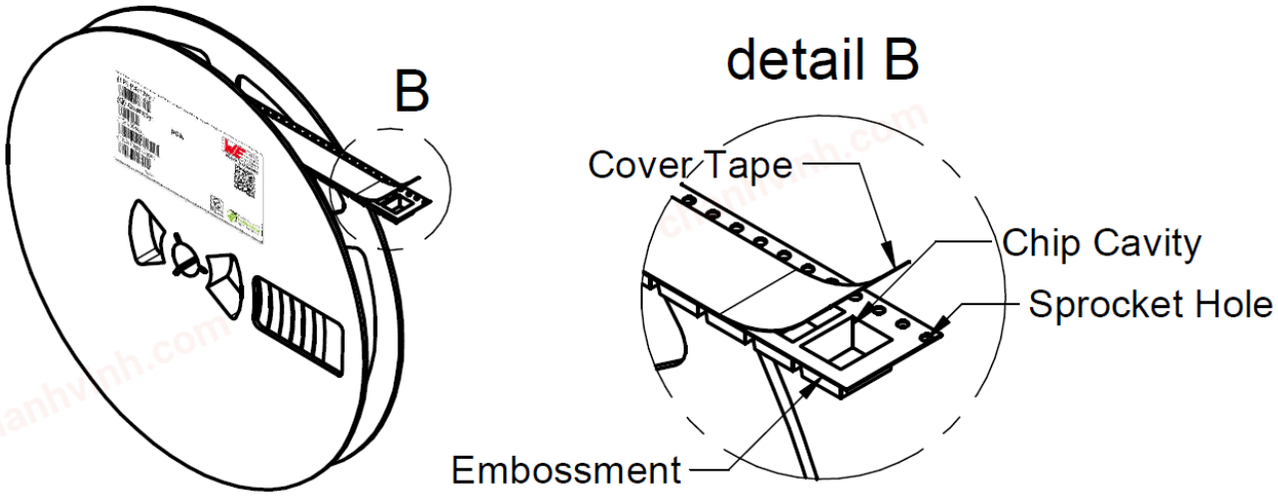

© July 2019

171010550

MagI³C Power Module
VDMM – Variable Step Down MicroModule

Tape (mm)

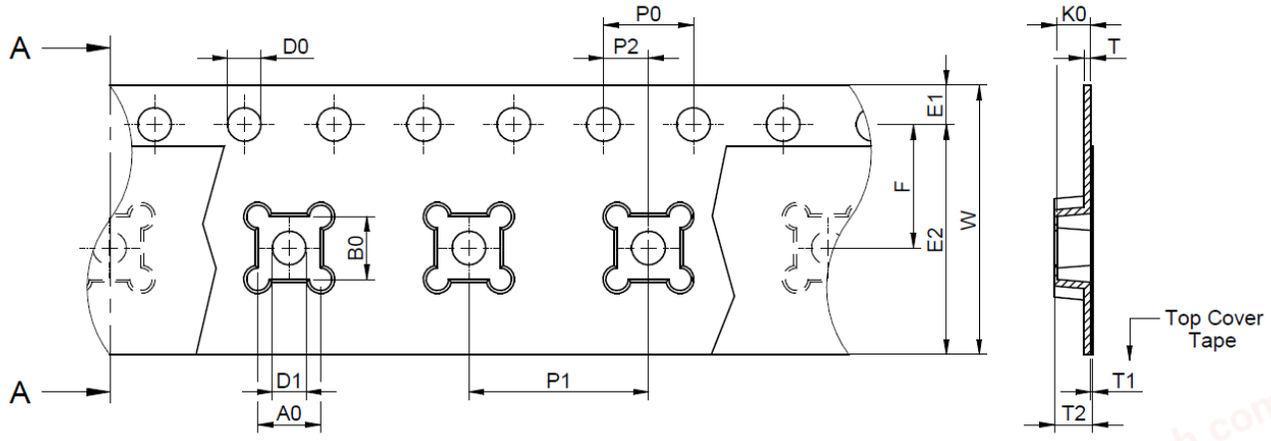

Tape Type	A0	B0	W	T	T1	T2	K0	P0	P1	P2	D0	D1	E1	E2	F	Material
	Typ.	Typ.	±0,3	Ref.	Ref.	Typ.	Typ.	±0,1	±0,1	±0,05	+0,1	+0,1	±0,1	Min.	±0,05	
2a	2,80	2,80	12,00	0,30	0,10		1,50	4,00	8,00	2,00	1,50	1,50	1,75	10,25		Polystyrene

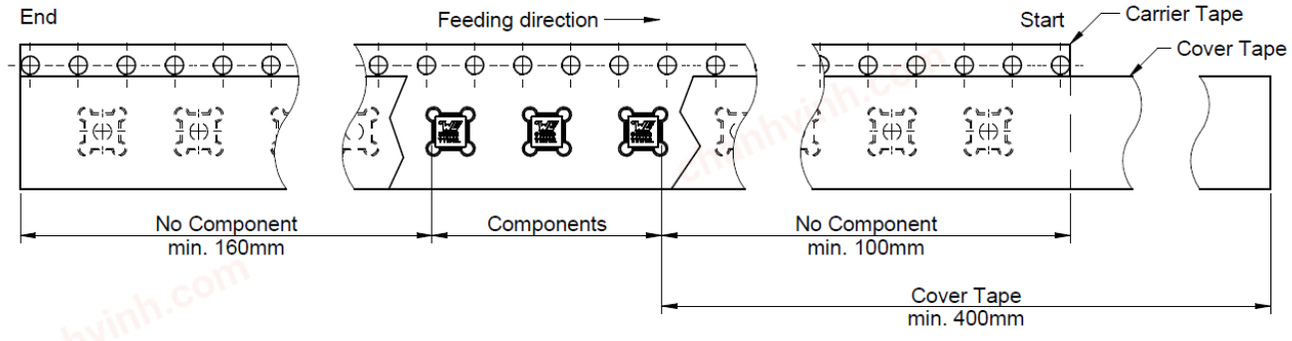

© July 2019

chanhvinh.com

171010550

MagI³C Power Module
VDMM – Variable Step Down MicroModule

DOCUMENT HISTORY

Revision	Date	Description	Comment
1.0	July 2019	Initial datasheet released	

© July 2019

chanhvinh.com
more than you expect

CAUTIONS AND WARNINGS

The following conditions apply to all goods within the product series of MagI³C of Würth Elektronik eiSos GmbH & Co. KG:

General:

• All recommendations according to the general technical specifications of the data-sheet have to be complied with.
• The usage and operation of the product within ambient conditions which probably alloy or harm the component surface has to be avoided.
• Electronic components that will be used in safety-critical or high-reliability applications, should be pre-evaluated by the customer.
• The component is designed and manufactured to be used within the datasheet specified values. If the usage and operation conditions specified in the datasheet are not met,the component may be damaged or dissolved.
• Do not drop or impact the components as material of the body, pins or termination may flake apart.
• Würth Elektronik products are qualified according to international standards, which are listed in each product reliability report. Würth Elektronik does not warrant any customer qualified product characteristics beyond Würth Elektroniks' specifications, for its validity and sustainability over time.
• The responsibility for the applicability of the customer specific products and use in a particular customer design is always within the authority of the customer. All technical specifications for standard products also apply to customer specific products.
• Customer acknowledges and agrees that it is solely responsible for compliance with all legal, regulatory and safety-related requirements concerning its products, and any use of Würth Elektronik eiSos GmbH & Co. KG components in its applications, notwithstanding any applications-related information or support that may be provided by Würth Elektronik eiSos GmbH & Co. KG. Customer represents and agrees that it has all the necessary expertise to create and implement safeguards which anticipate dangerous consequences of failures, monitor failures and their consequences lessen the likelihood of failures that might cause harm and take appropriate remedial actions. Customer will fully indemnify Würth Elektronik eiSos and its representatives against any damages arising out of the use of any Würth Elektronik eiSos GmbH & Co. KG components in safety-critical applications.

Product specific:

Follow all instructions mentioned in the datasheet, especially:
• The solder profile has to comply with the technical reflow or wave soldering specification, otherwise this will void the warranty.
• All products are supposed to be used before the end of the period of 12 months based on the product date-code.
• Violation of the technical product specifications such as exceeding the absolute maximum ratings will void the warranty.
• It is also recommended to return the body to the original moisture proof bag and reseal the moisture proof bag again.
• ESD prevention methods need to be followed for manual handling and processing by machinery.
• Residual washing varnish agent that is used during the production to clean the application might change the characteristics of the body, pins or termination. The washing varnish agent could have a negative effect on the long term function of the product.
• Direct mechanical impact to the product shall be prevented as the material of the body, pins or termination could flake or in the worst case it could break. As these devices are sensitive to electrostatic discharge customer shall follow proper IC Handling Procedures.

DISCLAIMER

This electronic component has been designed and developed for usage in general electronic equipment only. This product is not authorized for use in equipment where a higher safety standard and reliability standard is especially required or where a failure of the product is reasonably expected to cause severe personal injury or death, unless the parties have executed an agreement specifically governing such use.
Moreover Würth Elektronik eiSos GmbH & Co KG products are neither designed nor intended for use in areas such as military, aerospace, aviation, nuclear control, submarine, transportation (automotive control, train control, ship control), transportation signal, disaster prevention, medical, public information network etc.. Würth Elektronik eiSos GmbH & Co KG must be informed about the intent of such usage before the design-in stage. In addition, sufficient reliability evaluation checks for safety must be performed on every electronic component which is used in electrical circuits that require high safety and reliability functions or performance.

These cautions and warnings comply with the state of the scientific and technical knowledge and are believed to be accurate and reliable. However, no responsibility is assumed for inaccuracies or incompleteness.
.

© July 2019

chanhvinh.com

171010550

MagI³C Power Module
VDMM – Variable Step Down MicroModule

IMPORTANT NOTES

The following conditions apply to all goods within the product range of Würth Elektronik eiSos GmbH & Co. KG:

1. General Customer Responsibility
Some goods within the product range of Würth Elektronik eiSos GmbH & Co. KG contain statements regarding general suitability for certain application areas. These statements about suitability are based on our knowledge and experience of typical requirements concerning the areas, serve as general guidance and cannot be estimated as binding statements about the suitability for a customer application. The responsibility for the applicability and use in a particular customer design is always solely within the authority of the customer. Due to this fact it is up to the customer to evaluate, where appropriate to investigate and decide whether the device with the specific product characteristics described in the product specification is valid and suitable for the respective customer application or not. Accordingly, the customer is cautioned to verify that the datasheet is current before placing orders.

2. Customer Responsibility related to Specific, in particular Safety-Relevant Applications
It has to be clearly pointed out that the possibility of a malfunction of electronic components or failure before the end of the usual lifetime cannot be completely eliminated in the current state of the art, even if the products are operated within the range of the specifications. In certain customer applications requiring a very high level of safety and especially in customer applications in which the malfunction or failure of an electronic component could endanger human life or health it must be ensured by most advanced technological aid of suitable design of the customer application that no injury or damage is caused to third parties in the event of malfunction or failure of an electronic component.

3. Best Care and Attention
Any product-specific notes, warnings and cautions must be strictly observed. Any disregard will result in the loss of warranty.

4. Customer Support for Product Specifications
Some products within the product range may contain substances which are subject to restrictions in certain jurisdictions in order to serve specific technical requirements. Necessary information is available on request. In this case the field sales engineer or the internal sales person in charge should be contacted who will be happy to support in this matter.

5. Product R&D
Due to constant product improvement product specifications may change from time to time. As a standard reporting procedure of the Product Change Notification (PCN) according to the JEDEC-Standard we inform about minor and major changes. In case of further queries regarding the PCN, the field sales engineer or the internal sales person in charge should be contacted. The basic responsibility of the customer as per Section 1 and 2 remains unaffected.

6. Product Life Cycle
Due to technical progress and economical evaluation we also reserve the right to discontinue production and delivery of products. As a standard reporting procedure of the Product Termination Notification (PTN) according to the JEDEC-Standard we will inform at an early stage about inevitable product discontinuance. According to this we cannot guarantee that all products within our product range will always be available. Therefore it needs to be verified with the field sales engineer or the internal sales person in charge about the current product availability expectancy before or when the product for application design-in disposal is considered. The approach named above does not apply in the case of individual agreements deviating from the foregoing for customer-specific products.

7. Property Rights
All the rights for contractual products produced by Würth Elektronik eiSos GmbH & Co. KG on the basis of ideas, development contracts as well as models or templates that are subject to copyright, patent or commercial protection supplied to the customer will remain with Würth Elektronik eiSos GmbH & Co. KG. Würth Elektronik eiSos GmbH & Co. KG does not warrant or represent that any license, either expressed or implied, is granted under any patent right, copyright, mask work right, or other intellectual property right relating to any combination, application, or process in which Würth Elektronik eiSos GmbH & Co. KG components or services are used.

8. General Terms and Conditions
Unless otherwise agreed in individual contracts, all orders are subject to the current version of the “General Terms and Conditions of Würth Elektronik eiSos Group”, last version available at www.we-online.com.

© July 2019