chanhvinh.com

Cartridge Fuse Blocks

0PTF0075P, 0PTF0077P, and 0PTF0078P > Circuit Board Mountable

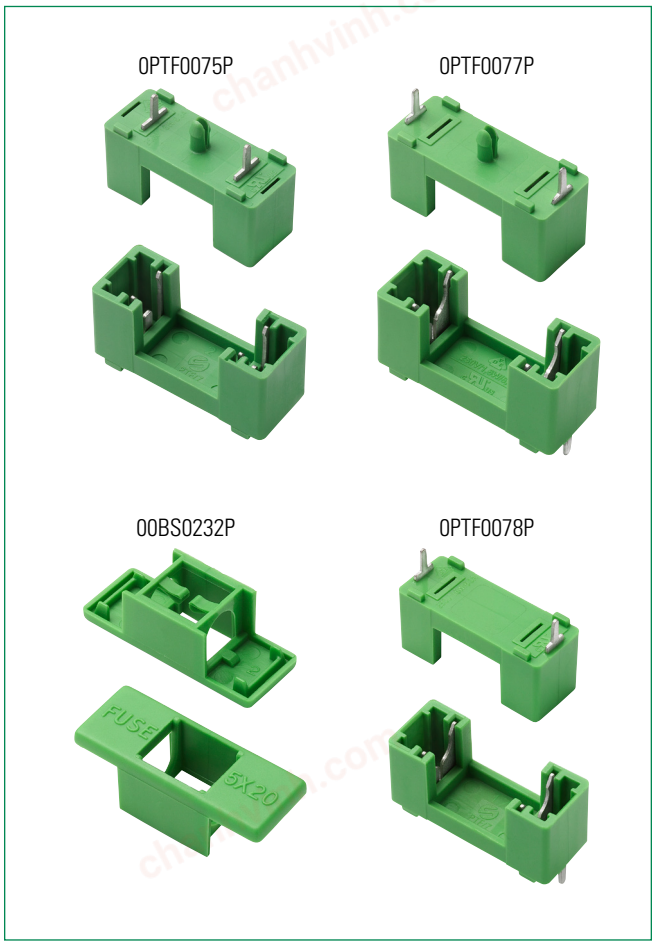

Product Characteristics

0PTF0075P/0PTF0077P/0PTF0078P	
Compatible Fuses	5x20 mm
Electrical Specifications	Rated Voltage: 250 V
	Rated Current: 6.3 A
	Rated Power: 1.6 W
Materials	Molded Holder (Block) and Cover: Green VE PA6/66 (UL94 V-0)
	PCB Terminals: Tin plated brass
Protection Class & Category	PC1 (IEC 60127-6)
Contact Resistance	≤ 5 mΩ
Degree of Protection	IP 00
Ambient Temperature	-30 °C to 120 °C
Solder Pot Temperature	260 °C
Solder Dwell Time	10 seconds

Features and Benefits

- RoHS compliant and Lead-free
- Include version of plug in to maintain the fuseblock into the correct position, while soldering process
- Tin-plated leads for easy soldering process
- UL recognized to UL 4248-1
- Low profile design for PC board mountable terminals for Pb-free wave soldering process

Agency Approvals

Agency	Agency File Number
c UL us	E14721
CSA	7316
VDE	97121

Ordering Information

Ordering PN	Description	Packaging
0PTF0075P	Horizontal Mount	1000 pieces, bulk pack
0PTF0077P	Horizontal Mount	1000 pieces, bulk pack
0PTF0078P	Horizontal Mount	1000 pieces, bulk pack
00BS0232P	Cover	1000 pieces, bulk pack

Note
Panel minimum 0,8 mm and maximum 4,5 mm

Additional Information

Resources | Accessories | Samples

© 2021 Littelfuse, Inc.
Specifications are subject to change without notice.
Revised: BA.07/31/21

Cartridge Fuse Blocks

0PTF0075P, 0PTF0077P, and 0PTF0078P > Circuit Board Mountable

Product Dimensions (in mm)

0PTF7500P

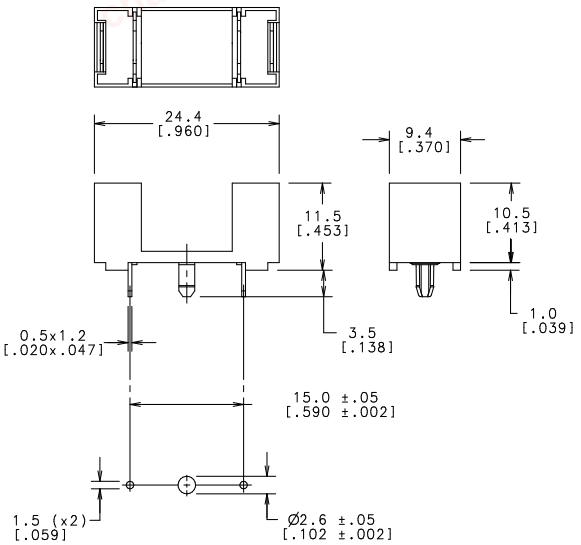

0PTF7700P

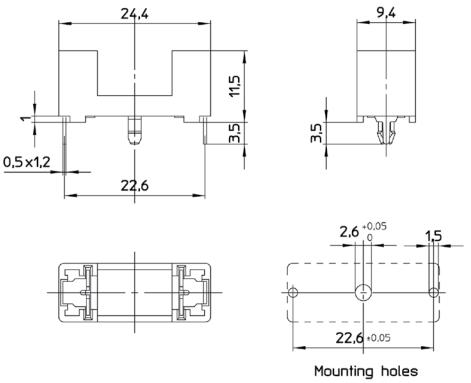

0PTF7800P

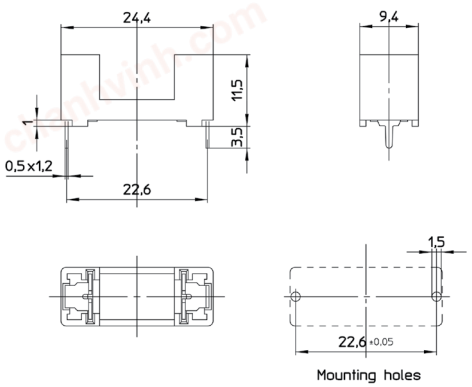

00BS0232P

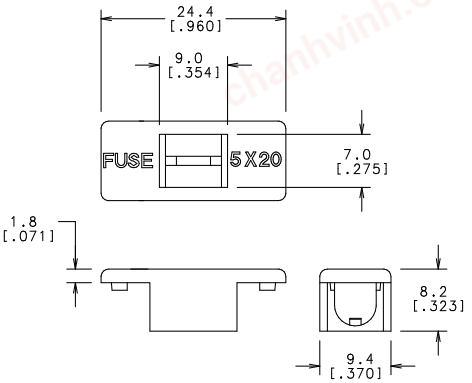

Soldering Parameters–Wave Soldering

Wave Parameter	Lead-Free Recommendation
Preheat: (Depends on Flex Activation Temperature)	(Typical Industry Recommendation)
Temperature Minimum	100° C
Temperature Maximum	150° C
Preheat Time	60–180 seconds
Solder Pot Temperature	260° C Maximum
Solder Dwell Time	2–5 seconds

Recommended Hand-Solder Parameters:
Solder Iron Temperature: 350° C +/- 5° C
Heating Time: 5 seconds max.

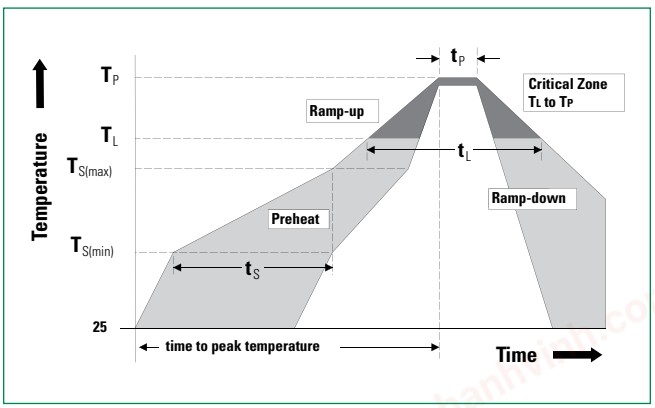

Disclaimer Notice - Information furnished is believed to be accurate and reliable. However, users should independently evaluate the suitability of and test each product selected for their own applications. Littelfuse products are not designed for, and may not be used in, all applications. Read complete Disclaimer Notice at http://www.littelfuse.com/disclaimer-electronics.

© 2021 Littelfuse, Inc.
Specifications are subject to change without notice.