chanhvinh.com

Littelfuse
Expertise Applied | Answers Delivered

Cartridge Fuse Holders

Enclosed Fuseholders > Panel Mounted

342 Series Panel Mount Enclosed Fuse Holders for 3AG/AB Fuses



Dimensions

General Application / Straight Terminal Product Dimensions

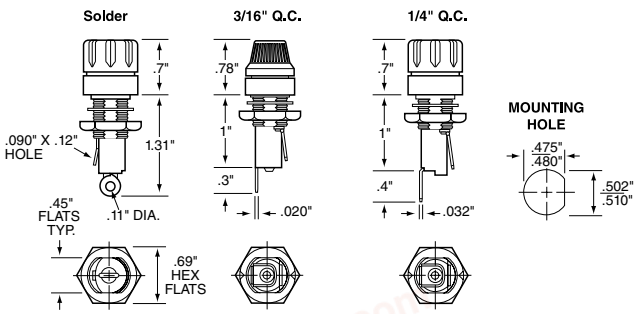

General Application / Right Angle Terminal Product Dimensions

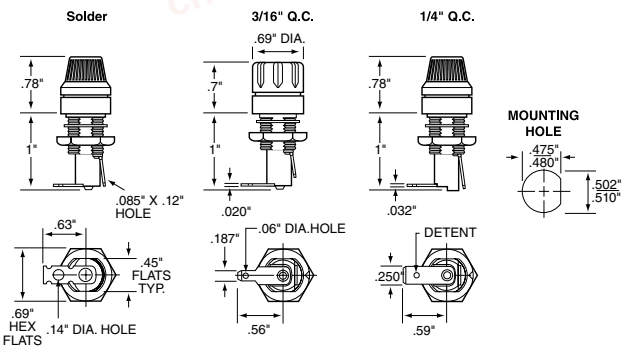

Watertight Product Dimensions

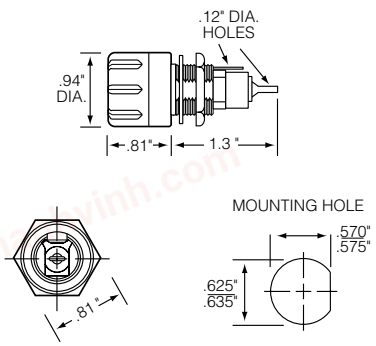

Product Characteristics

	General Application Products	Watertight Product
Compatible Fuses	3AG/AB	
Electrical	Rated at 20 amperes for any voltage up to 250.	
Ambient Temperature	–40°C to +85°C.	
Dielectric Strength	2400 volts minimum.	1500 volts minimum.
Mounting	Withstands 15 lb.-in. mounting torque; maximum panel thickness: .187".	Withstands 15 lb.-in. mounting torque; maximum panel thickness is .250".
Molded Parts	Black thermoplastic (UL94 V-0).	Black thermoset (UL94 V-0).
Seal	Neoprene washer provide drip-proof protection on the front side of the panel (upon request)	O-ring provides a watertight seal on the front side of the panel per MIL-PRF-19207.
Terminals	Copper & copper alloy. Tin plated, except ¼" Quick-Connect terminals are nickel plated.	Copper & copper alloy. Tin plated.
Hardware	Comes with a mounting nut and neoprene washer	O-rings (2) and hex nut, unassembled.

Agency Approvals

Agency	Agency File Number
	E14721
	7316 (*Except 342 006)

Ordering Information

Body Terminal Type		Catalog Number	
Angle	Connect	Fluted Knob	Knurled Knob
General Application Products:			
Straight	Solder	**342 014**	**342 012**
	3/16" Q.C.	**342 038**	**342 058**
	1/4" Q.C.	**342 838**	**342 858**
Right Angle	Solder	**342 004**	**342 022**
	3/16" Q.C.	**342 028**	**342 048**
	1/4" Q.C.	**342 828**	**342 848**
Watertight Product:			
Straight	Solder	**342 006** *	Not Applicable

NOTE: Ensure that proper fuse re-rating is factored in fuseholder selection.

Additional Information

Datasheet | **Resources** | **Samples**

© 2015 Littelfuse, Inc.
Specifications are subject to change without notice. Application testing is strongly recommended.
Revised: 06/15/15