chanhvinh.com

Techn. datasheet

MC55 / Zubehör

Fixing bracket M30



Part No.:	960.009.32

MECHANICAL DATA	
Length	55 mm
Height	35 mm
Materials	Aluminium
Housing colour	Black
Weight with packaging	21 g
Product weight	21 g

APPROVAL DATA	
Conforms with RoHS directive	Fulfills substance restriction

! For additional installation and mounting information, refer to the appropriate user guide at www.werma.com. This printed copy is for information only and is subject to alteration.

chanhvinh.com

MC55 / Zubehör

Fixing bracket M30

DRAWING

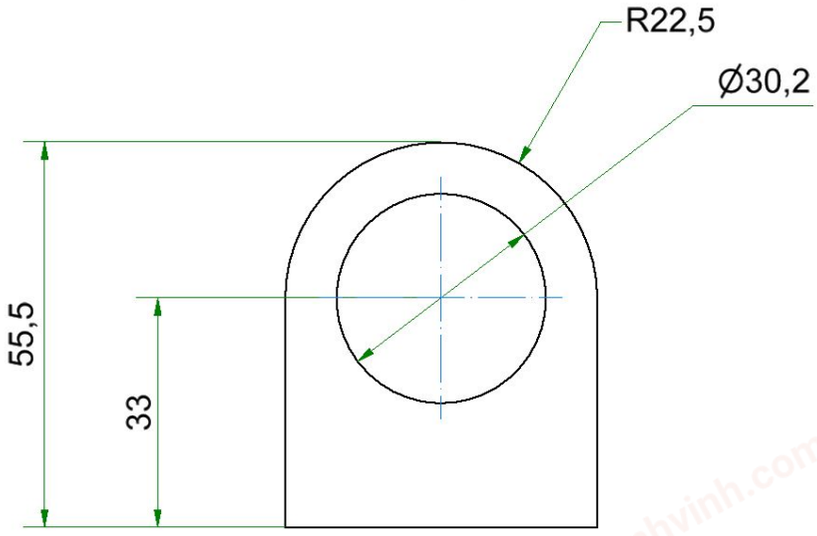

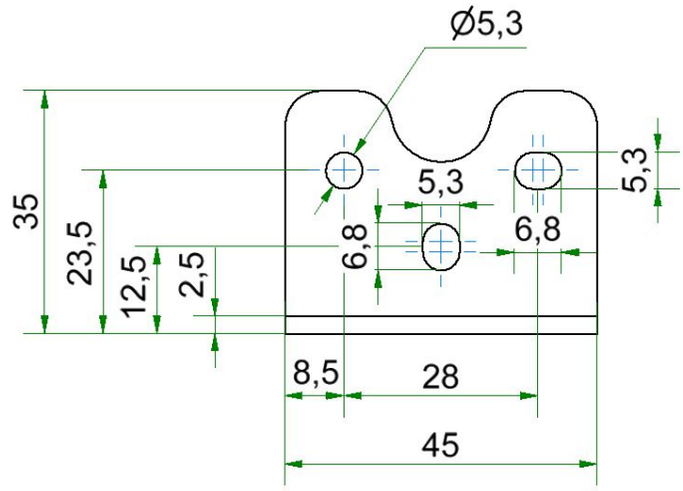

! For additional installation and mounting information, refer to the appropriate user guide at www.werma.com. This printed copy is for information only and is subject to alteration.