chanhvinh.com

# Techn. datasheet

## LineLIGHT Fusion 500 24V RGB Clip



| | |
|---|---|
| **Part No.:** | **300.100.09** |
| **Series:** | **LineLIGHT** |

| **MECHANICAL DATA** | |
|---|---|
| Length | 545 mm |
| Width | 33 mm |
| Height | 23 mm |
| Materials | Aluminium<br>PC<br>Stainless steel |
| Dome colour | Translucent |
| Housing colour | Black |
| Protection category | IP54<br>IP65 |
| Connection | M12 plug 5-pole |
| Type of fixing | Built-in mounting |
| Working temperature minimum | -30°C |
| Working temperature maximum | +50°C |
| Weight with packaging | 529 g |
| Product weight | 414 g |
| Min. Tightening torque | 0.3Nm |
| Max. Tightening torque | 0.6Nm |

| **ELECTRICAL DATA** | |
|---|---|
| Operating voltage | 24V |
| Operating voltage type | DC |
| Operating voltage tolerance | +/- 10% |
| Rated operational voltage | 24 VDC |
| Rated operational current | 320 mA |
| Protection class | Protection class 3 |
| Pollution degree | 3<br>In the connection area: 2 |
| Overvoltage category | I |

| **OPTICAL DATA** | |
|---|---|
| Light source | LED |
| Light colour | MC 7 colours |
| Optical signal image | Permanent |
| Length illuminated area (mm) | 500 |
| Service life optical | 50,000 h maximum |

| **APPROVAL DATA** | |
|---|---|
| Conforms with CE | Yes |
| Conforms with RoHS directive | Yes |

! For additional installation and mounting information, refer to the appropriate user guide at www.werma.com. This printed copy is for information only and is subject to alteration.

chanhvinh.com



# LineLIGHT Fusion 500 24V RGB Clip

| | |
|---|---|
| WEEE | Yes |
| Conforms with RED directive | No |
| Conforms with ATEX-directive | No |
| Conforms with CCC-Ex | No |
| Conforms with CCC | No |
| Conforms with UL | No |
| Conforms with FCC | No |
| Conforms with ISED | No |
| EAC certificate available | No |
| Conforms with UKCA (Importer) | Yes (WERMA (UK) Ltd.) |
| Conforms with CMIM | No |
| Conforms with AS-I | No |
| Conforms with DNV | No |
| Conforms with RoHS CN | 25 years |
| Conforms with VdS | No |

## DRAWING

| Article number | L* (mm) | Clip * (Pcs) |
|---|---|---|
| 300 100 05 , 300 100 65 | 200 | 2 |
| 300 100 17 , 300 100 67 | 300 | 3 |
| 300 100 21 | 400 | 4 |
| 300 100 09 | 500 | 5 |
| 300 100 27 , 300 100 69 | 600 | 6 |
| 300 100 31 | 700 | 7 |
| 300 100 35 | 800 | 8 |
| 300 100 39 , 300 100 71 | 900 | 9 |
| 300 100 43 | 1000 | 10 |
| 300 100 47 | 1100 | 11 |
| 300 100 51 , 300 100 73 | 1200 | 12 |
| 300 100 55 | 1300 | 13 |
| 300 100 59 | 1400 | 14 |
| 300 100 63 , 300 100 75 | 1500 | 15 |

* L : Length illuminated Area.
* Clip : Needed Quantity of **Clips** to ensure IP65.

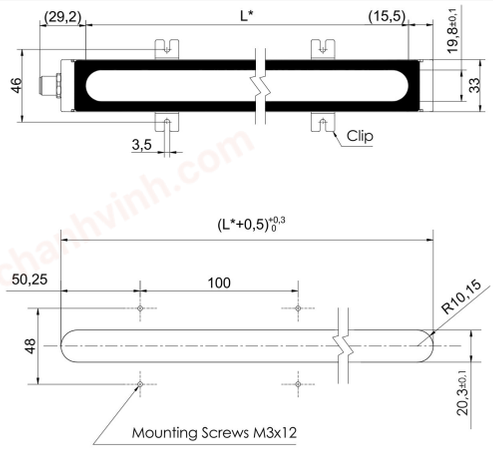


If IP65 is not needed, the amount of clips can be reduced and spacing distance can be user-defined.

! For additional installation and mounting information, refer to the appropriate user guide at www.werma.com. This printed copy is for information only and is subject to alteration.