chanhvinh.com

Datenblatt

Crimping tool
PZ 16

Weidmüller Interface GmbH & Co. KG
Klingenbergstraße 16
D-32758 Detmold
Germany
Fon: +49 5231 14-0
Fax: +49 5231 14-292083
www.weidmueller.com



RoHS COMPLIANT

Crimping tools for wire end ferrules, with and without plastic collars

- Ratchet guarantees precise crimping
- Release option in the event of incorrect operation

General ordering data

Type	PZ 16
Order No.	9012600000
Version	Crimping tool, Crimping tool for wire-end ferrules, 6mm², 16mm², Indent crimping
GTIN (EAN)	4008190035440
Qty.	1 pc(s).

chanhvinh.com

Datenblatt

Crimping tool
PZ 16

Weidmüller Interface GmbH & Co. KG
Klingenbergstraße 16
D-32758 Detmold
Germany
Fon: +49 5231 14-0
Fax: +49 5231 14-292083
www.weidmueller.com

Technische Daten

Dimensions and weights

Length	200 mm	Weight	418 g
Net weight	419.2 g		

Technical data

Version	Mechanical, without interchangeable inserts

Contact description

Type of contact	Wire-end ferrules with/ without plastic collars	Crimping range, min.	6 mm²
Crimping range, max.	16 mm²		

Tool data - crimping

Crimping profile 1, min.	6 mm²	Crimping type/profile	Indent crimping
Wire end ferrules cross-section, min.	6 mm²	Wire end ferrules cross-section, max.	16 mm²
Crimping profile 2, min.	10 mm²	Crimping profile 3, min.	16 mm²

Classifications

ETIM 3.0	EC000005	UNSPSC	31-16-31-02
eClass 5.1	27-40-02-01	eClass 6.2	21-04-38-90
eClass 7.1	27-40-02-01		

Product information

Descriptive text ordering data	Additional accessories can be found in Chapter J
Descriptive text accessories	Information and ordering data for wire end ferrules - see chapter J accessories wire end ferrules

Approvals

Approvals	EAC PG ME25
ROHS	Conform

chanhvinh.com

Datenblatt

Crimping tool
PZ 16

Weidmüller Interface GmbH & Co. KG
Klingenbergstraße 16
D-32758 Detmold
Germany
Fon: +49 5231 14-0
Fax: +49 5231 14-292083
www.weidmueller.com

Zeichnungen



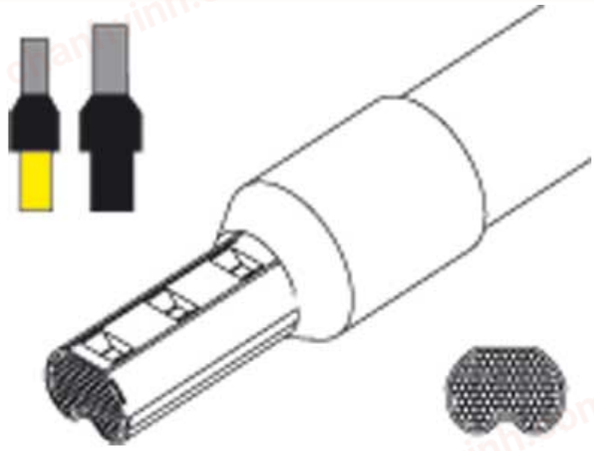

chanhvinh.com

Addresses worldwide

Let's connect.

AE **United Arab Emirates**

Weidmuller Middle East FZE
Warehouse Q3-79
SAIF-Zone
P.O. BOX 8591
Sharjah
Telephone number +971 65572723
Fax number +971 65572724
wme.info@weidmueller.com

AO **Angola**
Please contact
Phambili Interface
South Africa

AR **Argentina**
CPI SA
Bauness 2660
C1431DOF Buenos Aires
Telephone number +54 11 4523 8008
Fax number +54 11 4522 0546
info@cpi.com.ar
www.cpi.com.ar

AT **Austria**
Weidmüller GmbH
IZ NOE Süd Straße 2b, Obj M 59
2355 Wiener Neudorf
Telephone number +43 2236 67080
Fax number +43 2236 6708-899
office.at@weidmueller.com
www.weidmueller.com

AU **Australia**
Weidmüller Pty. Ltd.
PO BOX 6944
Huntingwood 2148
Huntingwood Drive 43
Huntingwood NSW 2148
Telephone number +61 2 9671 9999
Fax number +61 2 9671 9911
info@weidmuller.com.au
www.weidmuller.com.au

AZ **Azerbaijan**
Representative Office
Rashad Mahmudov
Demirchi Tower, 4th floor
37, Khojali ave.
AZ 1025 Baku
Telephone number +994 12 488 80 36
Fax number +994 12 488 80 37
rashad.mahmudov@weidmueller.com

BA **Bosnia and Herzegovina**
Please contact
our Representative Office
Weidmüller Interface GmbH & Co. KG
Serbia

or

BIG electric d.o.o
Mladena Stojanovića 117A
78000 Banja Luka
Telephone number +387 51926277
Fax number +387 51926277
bigelectric@blic.net
www.bigelectric.ba

BE **Belgium**
Weidmüller Benelux B. V.
Mechelsesteenweg 519 bus 6 en 7
1930 Nossegem
Telephone number +32 2 752 40 70
Fax number +32 2 751 36 06
info@weidmueller.be
www.weidmueller.be

BG **Bulgaria**
Weid-Bul EOOD
Bul. "Kliment Ohridski" 13
1756 Sofia
Telephone number +359 2 963 2560
Fax number +359 2 963 1098
sofia@weidbul.com
www.weidbul.com

BH **Bahrain**
Khayber Trading Company
P.O Box 1976
Manama
Telephone number +973 720747
Fax number +973 720331
khayber@batelco.com.bh

BR **Brazil**
Weidmuller Conexel do Brasil
Conexões Elétricas Ltda.
Av. Presidente Juscelino, 642 - Piraporinha
Diadema, São Paulo
09950-370
Telephone number +55 (11) 4366-9600
Fax number +55 (11) 4362-1677
vendas@weidmueller.com.br
www.weidmueller.com.br

BW **Botswana**
Please contact
Phambili Interface
South Africa

BY **Belarus**
TECHNIKON Ltd.
Nezavisimosti pr. 177-9
220125 Minsk
Telephone number +375 17 393-11-77
Fax number +375 17 3930080
wm@technikon.by

CA **Canada**
W Interconnections Canada Inc.
10 Spy Court
Markham Ontario L3R 5H6
Telephone number +1 (905) 475-1507 Ext. 9836
Fax number +1 (905) 475-2798
support@weidmuller.ca
www.weidmuller.ca

CG **Congo**
Please contact
Phambili Interface
South Africa

CH **Switzerland**
Weidmüller Schweiz AG
Rundbuckstraße 2
8212 Neuhausen am Rheinfall SH
Telephone number +41 52 674 07 07
Fax number +41 52 674 07 08
info@weidmueller.ch
www.weidmueller.ch

CL **Chile**
ATS - INTECH
María Luisa Santander 0475
Santiago
Providencia 7500859
Telephone number +56 2 341 1271
Fax number +56 2 341 1275
felipe@atsintech.com
www.atsintech.com

CPI CHILE LTDA
Av. Presidente Frei Montalva 6001, 47 complejo el cortijo
Santiago - Conchali
Telephone number +562 963 8440
Fax number +562 963 8440
cpi@cpichile.cl
www.cpichile.cl

CN **China**
Weidmüller Interface (Shanghai) Co. Ltd.
100 Yutong Road
25 F, BM Intercontinental Business Center
200070 Shanghai
Telephone number +86 21-22195008
Fax number +86 512-68417505
customer.hotline@weidmueller.com.cn
www.cnweidmuller.com

CO **Colombia**
Automatización Avanzada S. A.
Carrera 97 No., 24 c - 23 Bodega 4
110911 Bogotá-D.C.
Telephone number +57 (1) 547-8510
Fax number +57 (1) 422-3044
comercial@automatizacionavanzada.com
www.automatizacionavanzada.com

CR **Costa Rica**
ELVATRON S. A.
la Uruca 400 Norte Banco Costa Rica
San Jose Costa Rica
Telephone number +506 2961-060
Fax number +506 5200-609
dirk.haase@elvatron.com
www.elvatron.com

CZ **Czech Republic**
Weidmüller s.r.o.
Lomnického 5/1705
140 00 Praha 4
Telephone number +420 244 001 400
Fax number +420 244 001 499
office@weidmueller.cz
www.weidmueller.cz

DE **Germany**
Weidmüller GmbH & Co. KG
Ohmstraße 9
32758 Detmold
Postfach 30 54
32720 Detmold
Telephone number +49 5231 1428-0
Fax number +49 5231 14-292083
weidmueller@weidmueller.de
www.weidmueller.de

DK **Denmark**
Weidmüller Danmark
Vallensbækvej 18A
2605 Brøndby
Telephone number +45 27747800
kundeservice@weidmuller.dk
www.weidmuller.dk

EC **Ecuador**
Elsystec S. A., Electricidad Sistemas y Tecnología
Vasco de Contreras N35-251 y Mañosca
Quito - Pichincha
Telephone number +593 22456510
Fax number +593 22456755
Elsystec@uio.satnet.net

EE **Estonia**
Please contact
our Representative Office
Weidmüller Interface GmbH & Co. KG
Latvia

or

Soots Interface OÜ
Pärnu mnt 142
11317 Tallinn
Telephone number +372 609 6933
Fax number
info@sootsinterface.ee
www.sootsinterface.ee

EG **Egypt**
Standard Electric (OMEGA)
87, Mohamed Farid Street
Heliopolis
Cairo
Telephone number +202 26229000
Fax number +202 26221555
stdelec@rite.com

ES **Spain**
Weidmüller, S. A.
Narcis Monturiol 11-13, Pol. Ind. Sudoeste
8960 Sant Just Desvern - Barcelona
Telephone number +34 934 803 386
Fax number +34 933 718 055
weidmuller@weidmuller.es
www.weidmuller.es

FI **Finland**
Weidmüller Suomi, Weidmüller Aktiebolagetin sivuliike
Koy Plaza Vivace
Äyritie 8C
FI 1510 Vantaa
Telephone number +358 20 7351300
Fax number +358 800 114 667
asiakaspalvelu@weidmuller.fi
www.weidmuller.fi

FR **France**
Weidmüller E. U. R. L.
12, Chaussée Jules César
BP 263 Osny
95523 Cergy-Pontoise Cedex
Telephone number +33 1 34 24 55 00
Fax number +33 1 34 24 55 01
mail@weidmuller.fr

GB **Great Britain**
Weidmüller Ltd.
Klippon House
Centurion Court Office Park, Meridian East, Meridian Business Park
Leicester
LE19 1TP
Telephone number +44 116 282 3470
Fax number +44 116 289 3582
marketing@weidmuller.co.uk
www.weidmuller.co.uk

GE **Georgia**
Please contact
our Representative Office
Rashad Mahmudov
Azerbaijan.

GR **Greece**
G.A. Solutions
Ippokratous 11 Metamorfosi
144 52 Athen
Telephone number +30 210 2823233
Fax number +30 210 2823233
info@weidmuller.gr
www.weidmuller.gr

GT **Guatemala**
Prestelectro, Prestegard Electro, S.A.
Avenida Petapa 44-22, Zona 12
Guatemala City
Telephone number +502 2442-3346
Fax number +502 2476-8945
ventas@prestelectro.com

HK **Hong Kong**
Weidmuller (Hong Kong) Limited Co. Ltd.
Unit 1617, Metropolis Tower
No. 10 Metropolis Drive, Hunghom, Kowloon
Telephone number +852 3154 8088
Fax number +852 31548099
Info-hk@weidmueller.com.hk

HR **Croatia**
ElektroPARTNER d.o.o.
Slavonska avenija 24/6
HR-10000 Zagreb
Telephone number +385 (1) 6184 793
Fax number +385 (1) 6184 795
elektropartner@zg.t-com.hr
www.elektropartner.hr

HU **Hungary**
Weidmüller Kereskedelmi Kft.
Budapest
Gubacsi út 6.
1097
Telephone number +36 1 382 7700
Fax number +36 1 382 7701
info@weidmueller.hu
www.weidmueller.hu

ID **Indonesia**
PT. Nego Electrindo
Ruko Mega Grosir Cempaka Mas Blok I No. 20 – 22
Jakarta 10640
Telephone number +62 21 42882255
Fax number +62 21 42882266
sales@negoelectrindo.co.id

IE **Ireland**
Please contact
Weidmüller Ltd.
Great Britain

IL **Israel**
A. U. Shay Ltd.
23/25, Embar Street
49222 Petach-Tikva
P.O. Box 1 00 49
49222 Petach-Tikva
Telephone number +972 3-923-3601
Fax number +972 3-923-4601
shay@uriel-shay.com
www.uriel-shay.com

ATEKA Ltd.
4, Ha Tavor lane Industrial area Segula
49691 Petach-Tikva
P.O. Box 4710
Petach-Tikva
Telephone number +972 73-200-1311
Fax number +972 3-924 4245
marketing@ateka.co.il
www.ateka.co.il

IN **India**
Representative Office
Weidmüller Electronics India Pvt. Ltd.
12th Lane North Avenue, Opp Joggers Park,
Kalyani Nagar, Pune
411 006
Telephone number +91 20-41290090
Nitish.Rajan@weidmueller.de
www.weidmueller.com

IS **Iceland**
Samey Automation Center
Lyngas 13
210 Garoabaer
Telephone number +354 510 5200
Fax number +354 5 10 5201
Samey@samey.is
www.samey.is

IT **Italy**
Weidmüller S. r.l.
Via Albert Einstein 4
20092 Cinisello Balsamo Milano
Telephone number +39 02 660681
Fax number +39 02 6124945
weidmuller@weidmuller.it
www.weidmuller.it

JM **Jamaica**
Please contact
W Interconnections Inc.
United States

JO **Jordan**
Trans Jordan for Electro
PO Box 33 06 07
Amman
Telephone number +962 6 533 2020
Fax number +962 6 533 5800
transjordan@batelco.jo

JP **Japan**
Nihon Weidmüller Co. Ltd.
Sphere Tower Tennoz 2-2-8
Higashi-Shinagawa, Shinagawa-ku
Tokyo
140-0002
Telephone number +81 3 6711 5300
Fax number +81 3 6711 5333
weidmullerjapan@weidmuller.co.jp
www.weidmuller.co.jp

chanhvinh.com

You can find all Weidmüller addresses and your local contact on the internet at: www.weidmueller.com/countries

Let's connect.

Sales company
Representation abroad
without representation abroad

KE Kenya
Please contact
Phambili Interface
South Africa

KR Korea
Weidmuller Korea Co. Ltd.
9th floor, Wonbang B/D
Samseong 2-Dong, Gangnam-Gu
Seoul 143-42
Telephone number +82 2-516-0003
Fax number +82 2-516-0090
info@weidmuller.co.kr
www.weidmuller.co.kr

KW Kuwait
Kana Controls General Trading & Contracting Co. W. L. L.
Al Rai Industrial Area, Plot 28-30, St. 31
13016 Safat
B.P. 25593
Telephone number +965 4741373
Fax number +965 4741537
info@kanacontrols.com

KZ Kazakhstan
Please contact
OOO Weidmüller
Russia

LB Lebanon
Progress Engineering & Trading Enterprises
Al Nahr Street
Beirut 11-1111
Telephone number +961 1 444 664
Fax number +961 1 561 880
progress@inco.com.lb

LT Lithuania
Please contact
our Representative Office
Weidmüller Interface GmbH & Co. KG
Latvia

or

ELEKTROS IRANGA
Tinklu g. 29 a
LT-5319 Panevezys
Telephone number +370 (45) 582 828
Fax number
info@eliranga.lt

LU Luxembourg
Please contact
Weidmüller Benelux B. V.
Netherlands

LV Latvia
SIA Abi4
Daugavgrivas 31b
Riga, LV-1007
Telephone number +371 674 70999
Fax number +371 676 24562
abi_4@tvnet.lv

Representative Office
Weidmüller Interface GmbH & Co. KG
Udens str. 12-118
Riga, LV-1007
Telephone number +371 29254766
Fax number +371 674 65637
Ilgonis.rudaks@weidmueller.com
www.weidmueller.com

MD Moldova
BERHORD A & D srl
79/1, str. Milescu Spartaru
MD-2075 Chisinau
Moldova
Telephone number +373 (22) 815002
Fax number +373 (22) 815007
atiuleanu@berhord.com
www.ad.berhord.com

ME Montenegro
Please contact
our Representative Office
Weidmüller Interface GmbH & Co. KG
Serbia.

MG Madagascar
Please contact
Phambili Interface
South Africa

MK Macedonia
Please contact
our Representative Office
Weidmüller Interface GmbH & Co. KG
Serbia

or

ELEKTRO - SMK dooel
UL. III Makedonska brigada b.b.
1000 Skopje
Telephone number +389 22460295
Fax number
Elektro-smk@telekabel.net.mk

MT Malta
E. S. S., Electrical Supplies & Services Ltd.
San Gwakkin Road
Mriehel

Telephone number +356 21255777
Fax number +356 21255999
robert.agius@ess.com.mt

MU Mauritius
Mubelo Electrical Ltd.
Office 26, Gateway building,
St Jean Road
Quatre Bornes
Mauritius
Telephone number +230 4670989
Fax number +230 4654051
richard.mubelo@orange.mu

MW Malawi
Please contact
Phambili Interface
South Africa

MX Mexico
W Interconnections S. A. DE C. V.
Blvd. Hermanos Serdán 698,
Col. San Rafael Oriente
72029 Puebla
Telephone number +52 (222) 268 6227
Fax number +52 (222) 286 6242
clientes@weidmuller.com.mx

MY Malaysia
Connect Plus Technology Sdn Bhd
No. 43, Jalan PJS 11/22, Bandar Sunway
46150 Petaling Jaya
Selangor Darul Ehsan
Telephone number +60 3 5633 7363
Fax number +60 3 5633 6562
paul@cptech.com.my
www.cptech.com.my

MZ Mozambique
Please contact
Phambili Interface
South Africa

NA Namibia
Please contact
Phambili Interface
South Africa

NG Nigeria
Please contact

NL Netherlands
Weidmüller Benelux B. V.
Franciscusweg 221
1216 SE Hilversum
P.O. Box 1505
1200 BM Hilversum
Telephone number +31 35 626 12 61
Fax number +31 35 623 20 44
info@weidmuller.nl
www.weidmuller.nl

NO Norway
Sivilingeniør J.F. Knudtzen AS
Billlingstadsletta 97
1396 Billingstad
PO Box 160
1378 Nesbru
Telephone number +47 66 98 33 50
Fax number +47 66 98 09 55
firmapost@jfknudtzen.no
www.jfknudtzen.no

NZ New Zealand
Cuthbert S. Steward Ltd.
27 Te Puni Street
Petone
PO Box 38496
Wellington Mail Centre 5054
Telephone number (04) 568 6156
Fax number (09) 489 1752
csl@cuthbertstewart.co.nz

Cuthbert S. Steward Ltd
4 Fred Thomas Drive
Aon Building, Ground Floor, South Entry
Takapuna
PO Box 100 338
North Shore City 745
Telephone number (09) 489 1751
Fax number (04) 568 6056
cslak@cuthbertstewart.co.nz

OM Oman
DAN INTERNATIONAL LLC.
Ghala St. 111
BP 2901
Seeb
Telephone number +968 5036 77
Fax number +968 5037 55
yedu@danintl.com

PE Peru
IMPEXINCA S.A.C.
Calle Ortiz de Zevallos No. 105, Urb. San Antonio
18
Lima, Miraflores
Telephone number +51 1 447 5608
info@impexinca.pe
www.impexinca.pe

J & W CIA. S. A.
Calle 6 Mz. D Lte. 23, Urb. Ind. Grimanesa
01
Callao
Telephone number +51 1 572 2539
Fax number +51 1 572 0152
contacto@jwcia.com
www.jwcia.com

PH Philippines
Enclosure Systems Specialists Inc.
2276 Don Chino Roces Avenue Extension
Room 103/105 Narra Building
1231 Makati City
Telephone number +63 2 813 8580
Fax number +63 2 813 8596
sales_encsys@pldtdsl.net
www.enclosuresystemsph.com

PK Pakistan
Automation Controls (Pak)
Apartment No. 33 C III,
Chenab Block, Allama Iqbal Town
Lahore
Telephone number +92 42 37809948
Fax number +92 42 37809950
nadeem@acpak.com.pk
www.acpak.com.pk

PL Poland
Weidmüller Sp. z. o. o.
ul. Ogrodowa 58
00-876 Warszawa
Telephone number +48 22 510 09 40
Fax number +48 22 510 09 41
biuro@weidmuller.com.pl
www.weidmuller.pl

PR Puerto Rico
Please contact
W Interconnections Inc.
United States

PT Portugal
Weidmüller Sistemas de Interface S. A.
Estrada Outeiro Polima, R. Augusto Dias da Silva, Lote B - Esct. 2
São Domingos de Rana
2785-515 Abóboda
Telephone number +351 214 459 191
Fax number +351 214 455 871
weidmuller@weidmuller.pt
www.weidmuller.pt

PY Paraguay
Please contact
CPI SA
Argentina

QA Qatar
Petroleum Technology Co. W.L.L.
PO Box 16069
5th Floor Toyota tower
Telephone number +974 44419603
Fax number +974 44419604
petrotec@qatar.net.qa
www.petrotec.com.qa

RO Romania
Representative Office
Weidmüller Interface GmbH & Co. KG
Ionescu Crum Street, No. 1, 1st Tower, 1st Floor, Office 4
500446 Brasov - Brasov Business Park
Telephone number +40 (268) 446 222
Fax number +40 (262) 205 410
claudiu.totea@weidmueller.com
www.weidmueller.com

RS Serbia
Representative Office
Weidmüller Interface GmbH & Co. KG
Ustanicka 189, III sprat lokal 7a
11050 Beograd
Telephone number +381 112885274
Fax number +381 112885274
zoran.rabrenovic@weidmueller.com

TeLa Elektrik d.o.o.
Ul.Dr Drage Ljočić 6
Beograd
Telephone number +381 11 2772 415
Fax number +381 11 2772 850
office@tela.rs
www.tela.rs

RU Russia
OOO Weidmüller
Warshavskoye highway, 25 A, bld. 6
Moskau
117105
Telephone number +7 (495) 771-69-40
Fax number +7 (495) 771-69-41
Info@weidmueller.ru
www.weidmueller.ru

SA Saudi Arabia
Al Abdulkarim Holding Co.
P.O. Box 4
Dammam 31411
Telephone number +966 3 8337110
Fax number +966 3 8829547
E-mail salehsk@akh.com.sa
www.weidmueller.ae

Saudi Electric Supply Company (SESCO)
P.O. Box 32 98
Al Khobar 31952
Telephone number +966 3 8829546 Ext. 3030
Fax number
E-mail Safdar.Malik@sesco-gex.com
www.sesco-gex.com

SE Sweden
Weidmüller AB
Axel Danielssons väg 271
BOX 31025
SE-200 49 Malmö
Telephone number +46 77-143 00 44
Fax number +46 40-37 48 60
info@weidmuller.se
www.weidmuller.se

SG Singapore
Weidmüller Pte. Ltd.
70 Bendemeer Road
04-03 Luzerne Building
Singapore 339940
Telephone number +65 6841 5311
Fax number +65 6841 5377
info@weidmuller.com.sg
www.weidmuller.com.sg

SI Slovenia
Elektrospoji d. o. o.
Stegne 27
SI- 1000 Ljubljana
Osrednjeslovenska
Telephone number +386 1 511 3810
Fax number +386 1 511 1604
info@elektrospoji.si
www.elektrospoji.si

SK Slovakia
ELEKTRIS s.r.o.
Elektrárenská 1
831 04 Bratislava
Telephone number +421 2/4920 0113
Fax number +421 2/4920 0119
bratislava@elektris.sk

SV El Salvador
Prestegard Electro
11 Avenida Norte No. 240
Edificio Salazar No. 2
San Salvador
Telephone number +503 2271 1690
Fax number +503 2221 3851
prestegard@navegante.com.sv

SY Syria
Please contact
Weidmuller Middle East FZE
United Arab Emirates

SZ Swaziland
Please contact
Phambili Interface
South Africa

TH Thailand
Pisanu Engineering Co. Ltd.
Kwang Dingaeng, Khet Dingaeng
800/2 Soi Trakulsuk, Asoke-dindaeng Road
Dindaeng, Bangkok
10400
Telephone number +66 2 248 2896
Fax number +662 105 6301
ecsales@pisanu.co.th
www.pisanu.co.th

Representative Office
Weidmüller Pte. Ltd.
37/F, Sathorn Square Building
98 North Sathorn Road
Bangkok, Silom Bangrak
10500
Telephone number +66 2 105 6300
Fax number +66 2 642 9220
info@weidmuller.com.sg

TN Tunisia
Please contact
Weidmüller E. U. R. L.
France

TR Turkey
Weidmüller Elektronik Ticaret Ltd. Sirketi
Kavacik Mah. Orhan Veli Kanik Caddesi 9/1
34810 Beykoz / Istanbul
Telephone number +90 (216) 537 10 70
Fax number +90 (216) 537 10 77
info@weidmuller.com.tr
www.weidmuller.com.tr

chanhvinh.com

Addresses worldwide

Let's connect.

TW **Taiwan**
Weidmuller (Hong Kong) Limited
No. 3, Lane 89, ChaungYang N. Rd
24148 SanChuang City, Taipei
Telephone number +886 921 949 751
roy.lin@weidmueller.com.hk

TZ **Tanzania**
Please contact
Phambili Interface
South Africa

UA **Ukraine**
LLC WM UKRAINE
Levanevskogo str. 6
Kiev
3058
Telephone number +38 044 490 32 48
Fax number
info@wm-ua.com.ua
wm-ua.com.ua/

Representative Office
Weidmueller Interface GmbH & Co. KG
Z, office 303
7-D, Zdolbunivska str.
Kiev, 2081
Telephone number (mobile) +38 050 440 25 24
info.ua@weidmueller.com

US **United States**
W Interconnections Inc.
821 Southlake Boulevard
Richmond Virginia 23236
Telephone number +1 (804) 794-2877
Fax number +1 (804) 379-2593
info@weidmuller.com
www.weidmuller.com

UY **Uruguay**
REWO Uruguay S. A.
AV. Bolivia 2001Esq Rocafuerte
11300 Carracso Montevideo
Telephone number +598 2604 8439
Fax number +598 2604 8439
rewo@rewouruguay.com.uy

UZ **Republic of Uzbekistan**
Please contact
OOO Weidmüller
Russia

VE **Venezuela**
Somerinca C. A.
Corazon de Jesus - 3ra Transversal con calle el Carmen- Los Dos Caminos
Caracas 1070-A
Telephone number +58 2122352748
Fax number +58 2122399341
klocmoeller@cantv.net
www.somerinca.com

VN **Vietnam**
AUMI Industrial Equipment & Automation Company Limited
E1, La Thanh Hotel
218 Doi Can Street
Lieu Giai Ward, Ba Dinh District
Hanoi City
Telephone number +84 4 37628601
Fax number +84 4 62661391
aumi@aumi.com.vn
www.aumi.com.vn

Representative Office
Weidmüller Pte. Ltd.
Level 16 Saigon Tower Building
29 Le Duan Street
District 1
Ho Chi Minh
Telephone number +848 3520 7717
Fax number +848 3520 7604
info@weidmuller.com.sg

ZA **South Africa**
Phambili Interface
PO Box 193
1609 Johannesburg, Edenvale
5 Bundo Road, Sebenza
1610 Johannesburg
Telephone number +27 (11) 4521930
Fax number
info@weidmuller.co.za
www.weidmuller.co.za

ZM **Zambia**
Please contact
Phambili Interface
South Africa

ZW **Zimbabwe**
Please contact
Phambili Interface
South Africa