chanhvinh.com

Data Sheet | Item Number: 788-102

Relay socket; 2 changeover contacts; for 15 mm basic relays; gray

https://www.wago.com/788-102

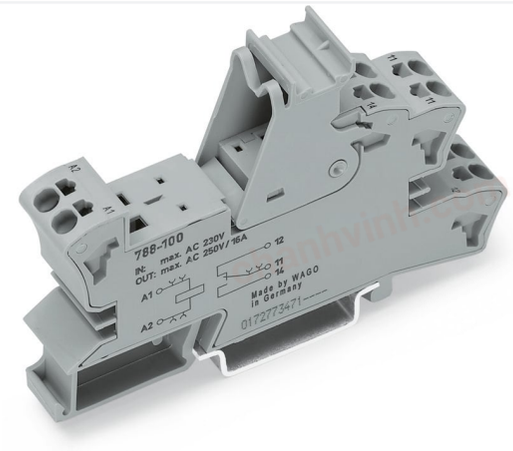

Color: gray

Similar to illustration

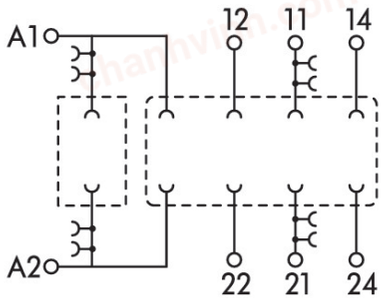

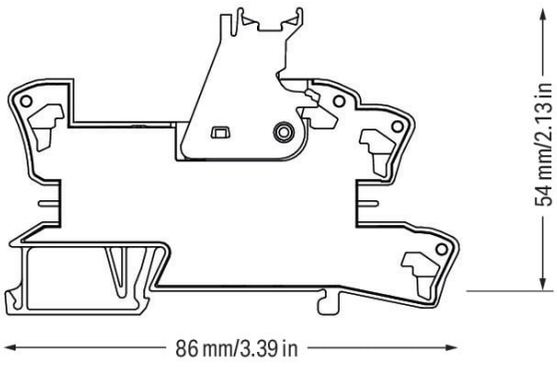

Dimensions in mm

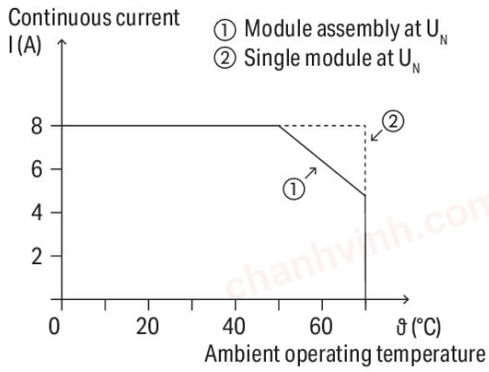

Current-carrying capacity curve

Notes

Note	The specified technical data are maximum values. They may be limited by the accessories used.

Technical data

Control circuit

Nominal input voltage U_N	AC/DC 230 V
Input voltage range	AC/DC 0 … 250 V
Nominal frequency range	50 … 60 Hz

Load circuit

Number of changeover/switchover contacts	2
Limiting continuous current	8 A
Switching voltage (max.)	AC 300 V
Nominal frequency range	≤60 Hz

chanhvinh.com

Safety and protection

Rated voltage	300 V
Overvoltage category	II
Pollution degree	3
Dielectric strength (control/load circuit) (AC, 1 min)	3.6 kVrms
Dielectric strength (open contact) (AC, 1 min)	1 kVrms
Insulation type (control/load circuit)	Reinforced insulation (safe isolation)
Insulation type (load/load circuit)	Basic insulation
Insulation type (between adjacent devices of the same type)	Basic insulation
Protection type	IP20

Connection data

Connection technology	Push-in CAGE CLAMP®
Solid conductor	0.34 … 2.5 mm² / 22 … 14 AWG
Fine-stranded conductor	0.34 … 2.5 mm² / 22 … 14 AWG
Strip length	9 … 10 mm / 0.35 … 0.39 inches

Physical data

Width	15 mm / 0.591 inches
Height	86 mm / 3.386 inches
Depth from upper-edge of DIN-rail	54 mm / 2.126 inches

Mechanical data

Mounting type	DIN-35 rail

Material data

Color	gray
Fire load	0.64 MJ
Weight	30.7 g
Relative temperature index for plastic (RTI per UL)	105 °C

Environmental requirements

Ambient temperature (operation at U_N)	-40 … +70 °C
Ambient temperature (storage)	-40 … +80 °C
Processing temperature	-25 … +50 °C
Temperature range of connection cable	≥ ($T_{ambient}$ + 20 K)
Relative humidity	5 … 95 % (no condensation permissible)
Operating altitude (max.)	2000 m

Standards and specifications

Standards/specifications	EN 61010-2-201

 Continued on next page

chanhvinh.com

Data Sheet | Item Number: 788-102

https://www.wago.com/788-102

Commercial data

Product Group	6 (INTERFACE ELECTRONIC)
eCl@ss 10.0	27-37-16-03
eCl@ss 9.0	27-37-16-03
ETIM 8.0	EC001456
ETIM 7.0	EC001456
PU (SPU)	20 (1) pcs
Packaging type	Box
Country of origin	CN
GTIN	4050821591788
Customs tariff number	85366990990

Environmental Product Compliance

RoHS Compliance Status	Compliant,No Exemption

Approvals / Certificates

Declarations of conformity and manufacturer's declarations

Approval	Standard	Certificate Name
EU-Declaration of Conformity WAGO GmbH & Co. KG	-	-
UK-Declaration of Conformity WAGO GmbH & Co. KG	-	-

Downloads

Environmental Product Compliance

Compliance Search

Environmental Product Compliance 788-102

Documentation

Bid Text

788-102	19.02.2019	xml 3.61 KB
788-102	20.02.2019	docx 16.15 KB

Instruction Leaflet

Sockets with Elementary Relay/ SSR	V 1.0.1 09.10.2020	pdf 2271.22 KB

chanhvinh.com

CAD/CAE-Data

CAD data	CAE data
2D/3D Models 788-102	EPLAN Data Portal 788-102
	WSCAD Universe 788-102
	ZUKEN Portal 788-102

1 Compatible Products

1.1 Optional Accessories

1.1.1 Basic relay

1.1.1.1 Basic relay



Item No.: 788-152
Basic relay; Nominal input voltage: 12 VDC; 2 changeover contacts; Limiting continuous current: 8 A; Module width: 13 mm; Module height: 15 mm



Item No.: 788-180
Basic relay; Nominal input voltage: 230 VAC; 2 changeover contacts; Limiting continuous current: 8 A; Module width: 13 mm; Module height: 15 mm

1.1.2 Ferrule

1.1.2.1 Ferrule

Item No.: 216-241
Ferrule; Sleeve for 0.5 mm² / 20 AWG; insulated; electro-tin plated; electrolytic copper; gastight crimped; acc. to DIN 46228, Part 4/09.90; white

Item No.: 216-242
Ferrule; Sleeve for 0.75 mm² / 18 AWG; insulated; electro-tin plated; electrolytic copper; gastight crimped; acc. to DIN 46228, Part 4/09.90; gray

Item No.: 216-243
Ferrule; Sleeve for 1 mm² / AWG 18; insulated; electro-tin plated; electrolytic copper; gastight crimped; acc. to DIN 46228, Part 4/09.90; red



Item No.: 216-244
Ferrule; Sleeve for 1.5 mm² / AWG 16; insulated; electro-tin plated; electrolytic copper; gastight crimped; acc. to DIN 46228, Part 4/09.90; black



Item No.: 216-542
Twin ferrule; Sleeve for 2 x 1 mm² / AWG 2 x 18; red, insulated; 12 mm long; red

1.1.3 Filter module

1.1.3.1 Suppressor module



Item No.: 788-148
Filter module; RC filter element; Nominal voltage: 230 VAC

 Continued on next page

chanhvinh.com

1.1.4 Indicators

1.1.4.1 Status indication



Item No.: 788-124
Accessories for relay modules; Operation status indicator: red



Item No.: 788-125
Accessories for relay modules; Operation status indicator: red



Item No.: 788-121
Accessories for relay modules; Operation status indicator: red; Nominal operating voltage range: 48 … 60 VDC



Item No.: 788-122
Accessories for relay modules; Operation status indicator: red; Nominal operating voltage: 110 VDC



Item No.: 788-123
Accessories for relay modules; Operation status indicator: red; Nominal operating voltage: 24 VAC



Item No.: 788-120
Accessories for relay modules; Operation status indicator: red; Nominal operating voltage: 24 VDC

1.1.5 Jumper

1.1.5.1 Jumper



Item No.: 788-118
Jumper; for jumper slot; 2-way; from 1 to 3; insulated; light gray



Item No.: 788-113
Jumper; for jumper slot; 2-way; insulated; light gray



Item No.: 859-402
Jumper; for jumper slot; 2-way; insulated; light gray



Item No.: 788-114
Jumper; for jumper slot; 3-way; insulated; light gray



Item No.: 788-115
Jumper; for jumper slot; 4-way; insulated; light gray



Item No.: 788-116
Jumper; for jumper slot; 6-way; insulated; light gray



Item No.: 788-117
Jumper; for jumper slot; 8-way; insulated; light gray

1.1.6 Marking

1.1.6.1 Double marker carrier



Item No.: 209-128
Adaptor; gray

1.1.6.2 Group marker carrier



Item No.: 249-105
Group marker carrier; gray



Item No.: 209-145
Group marker carrier; white

1.1.6.3 Marker

Item No.: 209-183
Marker; white



Item No.: 793-502
WMB marking card; as card; MARKED; 1 … 10 (10x); not stretchable; Horizontal marking; snap-on type; white

Item No.: 793-503
WMB marking card; as card; MARKED; 11 … 20 (10x); not stretchable; Horizontal marking; snap-on type; white

Item No.: 793-504
WMB marking card; as card; MARKED; 21 … 30 (10x); not stretchable; Horizontal marking; snap-on type; white

Item No.: 793-505
WMB marking card; as card; MARKED; 31 … 40 (10x); not stretchable; Horizontal marking; snap-on type; white

Item No.: 793-501
WMB marking card; as card; not stretchable; plain; snap-on type; white



Item No.: 2009-115
WMB-Inline; for Smart Printer; 1500 pieces on roll; stretchable 5 - 5.2 mm; plain; snap-on type; white

Continued on next page

chanhvinh.com

1.1.6.4 Marking device



Item No.: 210-110
Fiber-tip pen

1.1.6.5 Marking strip



Item No.: 2009-110
Marking strips; for Smart Printer; on reel; not stretchable; plain; snap-on type; white

1.1.6.6 Protective marker cover

Item No.: 209-184
Protection cover; transparent

1.1.7 Tool

1.1.7.1 Operating tool



Item No.: 210-720
Operating tool; Blade: 3.5 x 0.5 mm; with a partially insulated shaft; multicoloured

chanhvinh.com