chanhvinh.com

Data Sheet | Item Number: 756-5312/050-100

Sensor/Actuator cable; M12A plug; angled; 5-pole; Length: 10 m

https://www.wago.com/756-5312/050-100



Similar to illustration

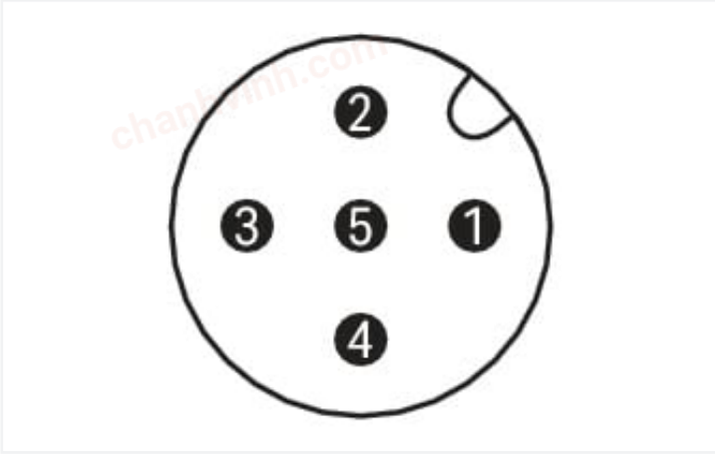

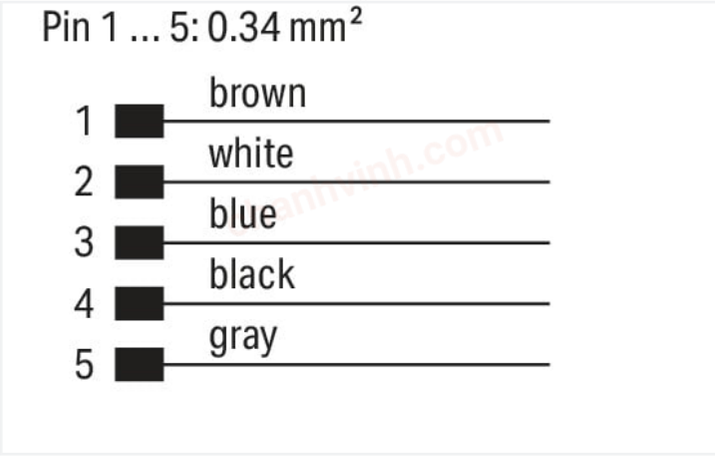

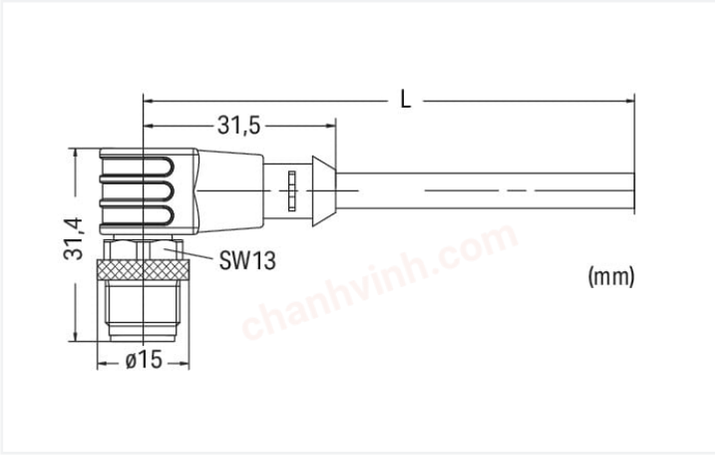

Dimensions in mm

Short description:

- PUR, halogen-free
- Suitable for drag chains
- High resistance to microbes, hydrolysis, oil, chemicals and UV radiation
- High chemical resistance
- Cable used: UL listed

Technical data

General information

Operating voltage	250 VAC/DC
Operating current	4 A
Rated surge voltage	1.5 kV
Insulation resistance	> 10^9 Ω
Contact resistance	10 mΩ
Conductor resistance	≤ 60 Ω/km
Pollution degree	3 per VDE 0110
Protection type	IP67
Ambient (operating) temperature (static)	-50 … +90 °C
Ambient (operating) temperature (dynamic)	-25 … +90 °C

Drag chain compatible

Bending radius	10 x cable diameter (min.)
Bending cycles	2 million
Acceleration (min.)	5 m/s²
Travel speed (max.)	3.33 m/s
Travel path (horizontal) max.	5 m
Travel path (vertical) max.	2 m
Torsional capacity	180 °/m

chanhvinh.com

Data Sheet | Item Number: 756-5312/050-100

https://www.wago.com/756-5312/050-100

Cable

Cable length	10 m
Type code	LiF9YH-11YH or LiF9YC11YFHF
Conductor configuration	Bare copper wire, fine-stranded (42 x 0.1 mm)
Conductor insulation	PP9Y (halogen-free)
Sheath material	Polyurethane (PUR), halogen-free per DIN VDE 0472 Part 815, flame resistant per IEC 332-2, self-extinguishing
Sheathed cable color	black
Sheathed cable diameter	4.8 … 5.2 mm

Connector

Connection type	M12 plug - free end
Pole number	5
Cable connection direction to mating direction	90 °
Connector interface coding (cable/adapter) 1 1	A-coded
Housing material	Polyurethane (PUR)
Contact material	CuSn
Tightening torque	1 Nm

Commercial data

eCl@ss 10.0	27-06-03-11
eCl@ss 9.0	27-06-03-11
ETIM 8.0	EC001855
ETIM 7.0	EC001855
PU (SPU)	1 pcs
Packaging type	Box
Country of origin	HU
GTIN	4045454536435
Customs tariff number	85444290900

Environmental Product Compliance

CAS-No.	7439-92-1
REACH Candidate List Substance	Lead
RoHS Compliance Status	Compliant,With Exemption
RoHS Exemption	6(c)
SCIP notification number (Austria)	72d0a8ce-1011-44ec-ada9-4c1fe63d833e
SCIP notification number (Belgium)	e7cf39a7-a9a3-4e0c-87f2-314c593047f3
SCIP notification number (Bulgaria)	072c7f38-085d-4627-a33c-ca27cc382e7a
SCIP notification number (Czech Republic)	4ecebcba-b32f-494f-82f1-b892b2c98b3e
SCIP notification number (Denmark)	5ea6d9c6-0f66-4731-99f2-01e0f5d417a7
SCIP notification number (Finland)	e38e8b1a-6e48-45c5-b4d4-883b33f2b643
SCIP notification number (France)	3985c350-e085-4570-abd2-7252043823ae
SCIP notification number (Germany)	2e56e741-223f-4f2a-b6ae-c0dae3b1a064
SCIP notification number (Hungary)	efc475dc-d285-4fa9-accb-0e56ad5995fb
SCIP notification number (Italy)	ad6e0c0a-a903-41c5-b6ef-919ac483573d
SCIP notification number (Netherlands)	1396245a-e1de-4626-86b4-60bc91e7466a
SCIP notification number (Poland)	f4827db9-7e48-48a3-8e29-b564c93d4df0
SCIP notification number (Romania)	abc2d11d-3bc8-40ce-9172-66238f4b4abe
SCIP notification number (Sweden)	d8df2e7c-fb32-46e3-87d3-da033c6bbdac

Approvals / Certificates

General approvals

Approval	Standard	Certificate Name
UL Underwriters Laboratories Inc.	UL 2238	E519602

chanhvinh.com

Downloads

Environmental Product Compliance

Compliance Search

Environmental Product Compliance 756-5312/050-100

Documentation

System Description

IP67 Cables and Plug-gable Connectors	pdf 157.80 KB	

Bid Text

756-5312/050-100	20.09.2017	doc 26.50 KB
756-5312/050-100	19.02.2019	xml 3.27 KB

CAD/CAE-Data

CAE data

WSCAD Universe 756-5312/050-100