chanhvinh.com

Data Sheet | Item Number: 756-1102/060-100

PROFIBUS cable; M12B socket; angled; 5-pole; Length: 10 m

https://www.wago.com/756-1102/060-100



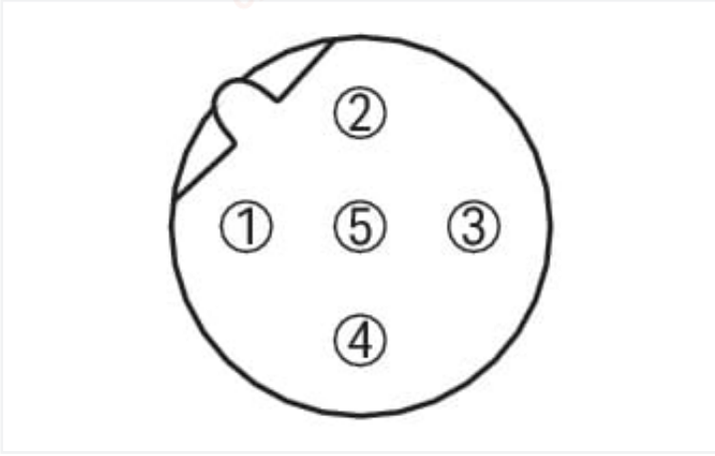

Color: violet

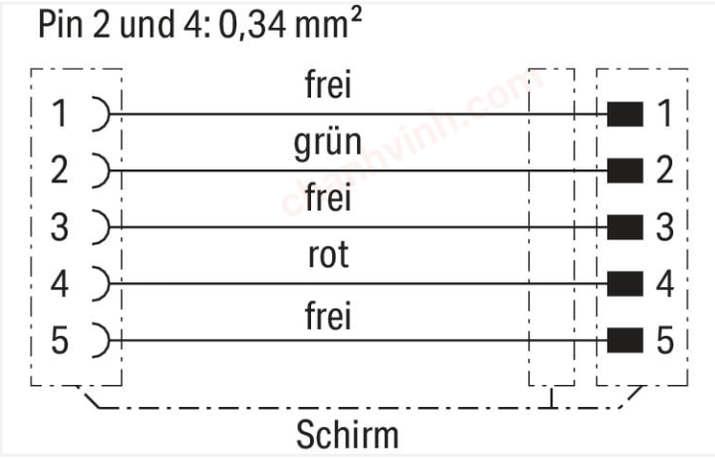

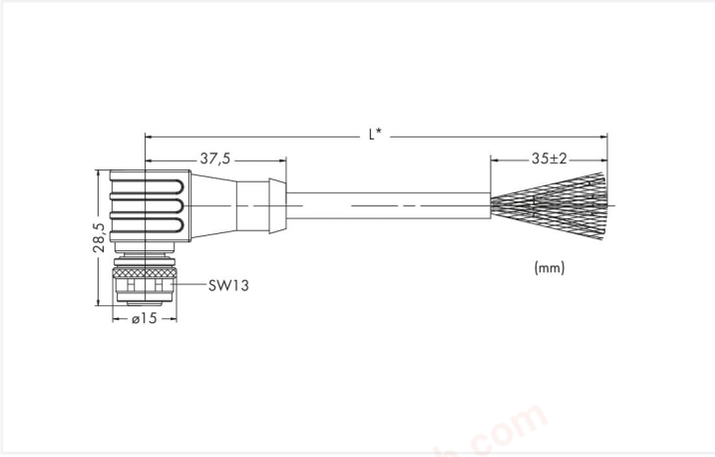

Dimensions in mm

Short description:

- PUR, halogen-free
- Suitable for drag chains
- Silicon- and PVC-free
- High resistance to microbes, hydrolysis, oil, chemicals and UV radiation
- High chemical resistance

Technical data	
Connection type	M12 Socket - free end
Pole number	5
Cable connection direction to mating direction	90 °
Connector interface coding (cable/adapter) 1 1	B-coded
Cable length	10 m
Communication/fieldbus	PROFIBUS
Operating voltage	≤ 300 V
Operating current	4 A
Rated surge voltage	2 kV
Insulation resistance	> 2500 MΩ/km
Conductor resistance	55 Ω/km (max.); Loop resistance: 110 Ω/km (max.)

chanhvinh.com

Mechanical data

Bending radius	> 10 x cable Ø (flexible use); > 5 x cable Ø in drag chain (fixed installation)
Bending cycles	1 million
Drag chain capability	Yes
Sheathed cable diameter	7.3 … 7.9 mm
Type code	LI02YS-(ST)CB11Y 1X(2X0.34SQMM)
Shield	Shielding braid, (approx. 5.90 mm Ø), tinned CU-ETP1, coverage 85 % ± 5 %
Conductor configuration	Bare copper wire (19 x 0.15 mm)
Conductor insulation	PE (halogen-free); Filler: PP yarn
Housing material	TPU/TPU, black (~ RAL 9005)
Tightening torque	1 Nm
Weight	700 g
Color	violet

Environmental requirements

Ambient (operating) temperature (dynamic)	-25 … +60 °C
Ambient (operating) temperature (static)	-50 … +60 °C
Protection type	IP67
Pollution degree	3/2 per IEC 60664-1
Fire load	0 MJ

Commercial data

eCl@ss 10.0	27-06-18-01
eCl@ss 9.0	27-06-18-01
ETIM 8.0	EC002599
ETIM 7.0	EC003249
PU (SPU)	1 pcs
Packaging type	Box
Country of origin	DE
GTIN	4045454521578
Customs tariff number	85444290900

Environmental Product Compliance

CAS-No.	7439-92-1
REACH Candidate List Substance	Lead
RoHS Compliance Status	Compliant,With Exemption
RoHS Exemption	6(c)
SCIP notification number (Austria)	20e09668-eedd-4b93-befc-a104d4c1a453
SCIP notification number (Belgium)	cc0c1bbf-ad33-4a20-bcad-594babf212e0
SCIP notification number (Bulgaria)	b9c1e272-8fa8-4311-9a41-70c5d77c8622
SCIP notification number (Czech Republic)	f9326e7b-c4ae-413a-922f-7662e2001793
SCIP notification number (Denmark)	a439b66f-dc72-44fe-ada5-ae3ac712ea10
SCIP notification number (Finland)	141a8f16-f1d6-49e9-88c4-384eb565d5ff
SCIP notification number (France)	7920b5f5-2b41-43b5-8d97-fcfc8dd8988c
SCIP notification number (Germany)	9703e7cc-d561-44a9-988f-4d5454816390
SCIP notification number (Hungary)	04765f82-031c-4586-826a-ed0feac01edb
SCIP notification number (Italy)	c93c8838-bf01-46a5-8d3c-f45fd04bc0d4
SCIP notification number (Netherlands)	8db93507-6f62-4dbf-9a03-bbfa2bb5596a
SCIP notification number (Poland)	e702da3a-1b3b-4491-987b-08911f7d502c
SCIP notification number (Romania)	f9967c8b-3288-4582-8e3e-17cb39b1d980
SCIP notification number (Sweden)	18d2c0fc-4fe7-411a-ab4a-a940ab3f1428

 Continued on next page

chanhvinh.com

Approvals / Certificates

General approvals

Approval	Standard	Certificate Name
UL Underwriters Laboratories Inc.	UL 2238	E519602

Downloads

Environmental Product Compliance

Compliance Search

Environmental Product Compliance 756-1102/060-100

Documentation

System Description

I/O-SYSTEM – SPEED-WAY, General Product Information	pdf 1035.20 KB	

CAD/CAE-Data

CAE data

WSCAD Universe 756-1102/060-100