chanhvinh.com

Data Sheet | Item Number: 756-1102/060-020

PROFIBUS cable; M12B socket; angled; 5-pole; Length: 2 m

https://www.wago.com/756-1102/060-020





Color: violet

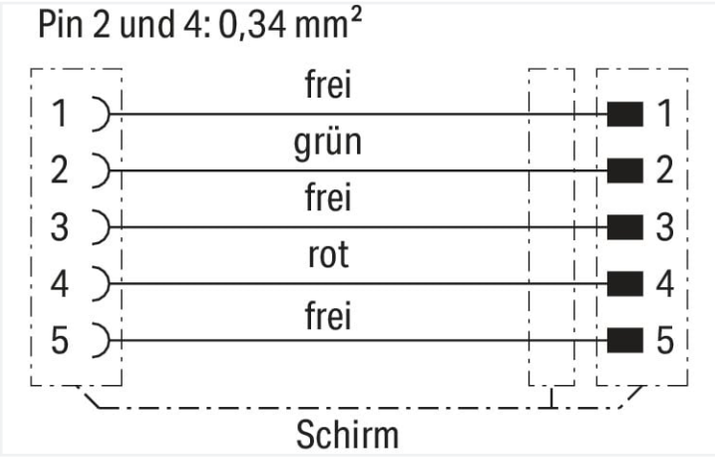

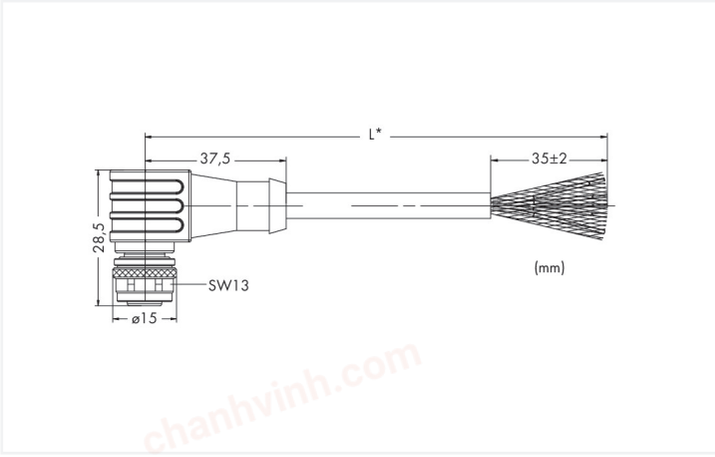

Dimensions in mm

Short description:

- PUR, halogen-free
- Suitable for drag chains
- Silicon- and PVC-free
- High resistance to microbes, hydrolysis, oil, chemicals and UV radiation
- High chemical resistance

Technical data	
Connection type	M12 Socket - free end
Pole number	5
Cable connection direction to mating direction	90 °
Connector interface coding (cable/adapter) 1 1	B-coded
Cable length	2 m
Communication/fieldbus	PROFIBUS
Operating voltage	≤ 300 V
Operating current	4 A
Rated surge voltage	2 kV
Insulation resistance	> 2500 MΩ/km
Conductor resistance	55 Ω/km (max.); Loop resistance: 110 Ω/km (max.)

chanhvinh.com

Data Sheet | Item Number: 756-1102/060-020

https://www.wago.com/756-1102/060-020

Mechanical data

Bending radius	> 10 x cable Ø (flexible use); > 5 x cable Ø in drag chain (fixed installation)
Bending cycles	1 million
Drag chain capability	Yes
Sheathed cable diameter	7.3 … 7.9 mm
Type code	LI02YS-(ST)CB11Y 1X(2X0.34SQMM)
Shield	Shielding braid, (approx. 5.90 mm Ø), tinned CU-ETP1, coverage 85 % ± 5 %
Conductor configuration	Bare copper wire (19 x 0.15 mm)
Conductor insulation	PE (halogen-free); Filler: PP yarn
Housing material	TPU/TPU, black (~ RAL 9005)
Tightening torque	1 Nm
Weight	70 g
Color	violet

Environmental requirements

Ambient (operating) temperature (dynamic)	-25 … +60 °C
Ambient (operating) temperature (static)	-50 … +60 °C
Protection type	IP67
Pollution degree	3/2 per IEC 60664-1
Fire load	0 MJ

Commercial data

eCl@ss 10.0	27-06-18-01
eCl@ss 9.0	27-06-18-01
ETIM 8.0	EC002599
ETIM 7.0	EC003249
PU (SPU)	1 pcs
Packaging type	Box
Country of origin	DE
GTIN	4045454521554
Customs tariff number	85444290900

Environmental Product Compliance

CAS-No.	7439-92-1
REACH Candidate List Substance	Lead
RoHS Compliance Status	Compliant,With Exemption
RoHS Exemption	6(c)
SCIP notification number (Austria)	aaf0527a-98e4-42f1-a23a-ec94ed94e6a3
SCIP notification number (Belgium)	bfccfc47-f700-45e9-8e92-ed949289c505
SCIP notification number (Bulgaria)	f341267b-4be1-44b8-bdb0-219c2bea0f50
SCIP notification number (Czech Republic)	2ba92fd1-a36c-45c6-8d6a-dd517ad9dcdc
SCIP notification number (Denmark)	70329524-0800-416e-bbe8-db5080780917
SCIP notification number (Finland)	4fba319d-69bf-44dc-b355-e92cb3ebabc9
SCIP notification number (France)	07a64783-9a5f-4ac9-847d-7a4659e93a2a
SCIP notification number (Germany)	61712432-637c-42b2-b571-c697318f899e
SCIP notification number (Hungary)	50d7ce8a-53e6-40f8-90d9-aa57099713c5
SCIP notification number (Italy)	b9f9dbaf-14cd-41ae-9c8e-cca5770570e6
SCIP notification number (Netherlands)	0cf510d1-87a4-4b31-a018-44cad7ba2a9a
SCIP notification number (Poland)	695d49fb-38ed-4858-ace3-f7141c05dab7
SCIP notification number (Romania)	abf52e9b-d587-4a3a-99b4-f653904b7e40
SCIP notification number (Sweden)	8701caf0-6fe3-4e0b-828a-d57a5cb2b978

Continued on next page

chanhvinh.com

Approvals / Certificates

General approvals

Approval	Standard	Certificate Name
UL Underwriters Laboratories Inc.	UL 2238	E519602

Downloads

Environmental Product Compliance

Compliance Search

Environmental Product Compliance 756-1102/060-020

Documentation

System Description

I/O-SYSTEM – SPEED-WAY, General Product Information	pdf 1035.20 KB	

CAD/CAE-Data

CAE data

WSCAD Universe 756-1102/060-020