chanhvinh.com

VISHAY
The DNA of tech.™

Product Information Notification

PIN

Product Group: OPT/Thu Jun 13, 2024/PIN-OPT-7462-2024-REV-1

Release of updated datasheets and app notes VEML6030-family and VEML7700

For further information, please contact your regional Vishay office.

CONTACT INFORMATION

Americas	Europe	Asia
Vishay Intertechnologies, Inc. Business Marketing The Americas - Opto	VISHAY Semiconductor GmbH Business Marketing Europe - Opto	VISHAY Intertechnology Asia Pte. Ltd. Business Marketing Asia/Japan
25 Tampines Street 92	Theresienstr. 2	25 Tampines Street 92, Keppel Building # 02-00,
2585 Junction Avenue San Jose, California 95134-1923	-	-
California United States 95134-1923	Heilbronn Germany D-74025	Singapore Singapore 528877
Phone: +1-408-567-8358	Phone: +49-7131-7498-645	Phone: +65 6780 7879
Fax: +1-408-240-5687	Fax: +49-7131-67-3144	Fax: +65 6780 7897
-	-	-

Description of Change: Change log/short description for the datasheet:

No performance change of the part

Adjusted resolution

Adjusted spectral response (ALS & white channel)

Renamed bits naming

Added ID register information

Declared configuration registers as R / W (read and write)

Detailed description of the implemented changes in the pdf-file attached

Change log/short description for the app note:

No performance change of the part

Adjusted resolution and maximum detectable illuminance as this was wrongly stated in the current appnote from 0.0036 lux/count and 120kLux to 0.0042 lux/count and 140 kLux, respectively

Adjusted spectral response (ALS & white channel)

Added information about integration time tolerance

Renamed bits naming

Added ID – register information

Declared configuration bits as R / W

Added examples and optimized handling instructions concerning the correction formula

Reason for Change: Adjusted resolution as this was wrongly stated in the current datasheet

Adjusted spectral response (ALS & white channel) as this was wrongly stated in the current datasheet

Renamed bits naming for readability purpose

Added ID – register information and Declared configuration registers as R / W (read and write) for customer convience

© 2021 VISHAY INTERTECHNOLOGY, INC. ALL RIGHTS RESERVED.

THIS DOCUMENT IS SUBJECT TO CHANGE WITHOUT NOTICE. THE PRODUCTS DESCRIBED HEREIN AND THIS DOCUMENT ARE SUBJECT TO SPECIFIC DISCLAIMERS, SET FORTH AT www.vishay.com/doc?91000

chanhvinh.com

Product Information Notification

Product Group: OPT/Thu Jun 13, 2024/PIN-OPT-7462-2024-REV-1

Expected Influence on Quality/Reliability/Performance: No influence on quality, reliability and performance expected, nevertheless we request customer to prove in application if resolution is defined by the customer itself in the application or not. If resolution is defined in the particular application by the customer, no changes in the system should be made. In the case resolution was taken from the datasheet or app note, this has to be adjusted accordingly.

Part Numbers/Series/Families Affected: Please see materials list on the succeeding page.

Vishay Brand(S): Vishay Semiconductors

Time Schedule:

Start Shipment Date: Tue Jun 11, 2024

Sample Availability: Available from release

Product Identification: No speicial identification, NO CHANGE ON THE PRODUCT

Qualification Data: no qualification required, NO CHANGE ON THE PRODUCT

Issued By: Elena Poklonskaya, elena.poklonskaya@vishay.com

© 2021 VISHAY INTERTECHNOLOGY, INC. ALL RIGHTS RESERVED.

THIS DOCUMENT IS SUBJECT TO CHANGE WITHOUT NOTICE. THE PRODUCTS DESCRIBED HEREIN AND THIS DOCUMENT ARE SUBJECT TO SPECIFIC DISCLAIMERS, SET FORTH AT www.vishay.com/doc?91000

chanhvinh.com

Product Information Notification

Product Group: OPT/Thu Jun 13, 2024/PIN-OPT-7462-2024-REV-1

VEML6030	VEML6030-GS15	VEML6030IT	VEML6030IT-GS15	VEML6030X01
VEML6030X01-GS15	VEML6030RBX01	VEML6030RBX01-GS15	VEML6030LT	VEML6030LT-GS15
VEML7700-TT	VEML7700-TR			

© 2021 VISHAY INTERTECHNOLOGY, INC. ALL RIGHTS RESERVED.

THIS DOCUMENT IS SUBJECT TO CHANGE WITHOUT NOTICE. THE PRODUCTS DESCRIBED HEREIN AND THIS DOCUMENT ARE SUBJECT TO SPECIFIC DISCLAIMERS, SET FORTH AT www.vishay.com/doc?91000

chanhvinh.com

VEML6030 – Datasheet update

Change from Rev. 1.6, 28-Apr-2022 to Rev. 1.7, 28-Nov-2023

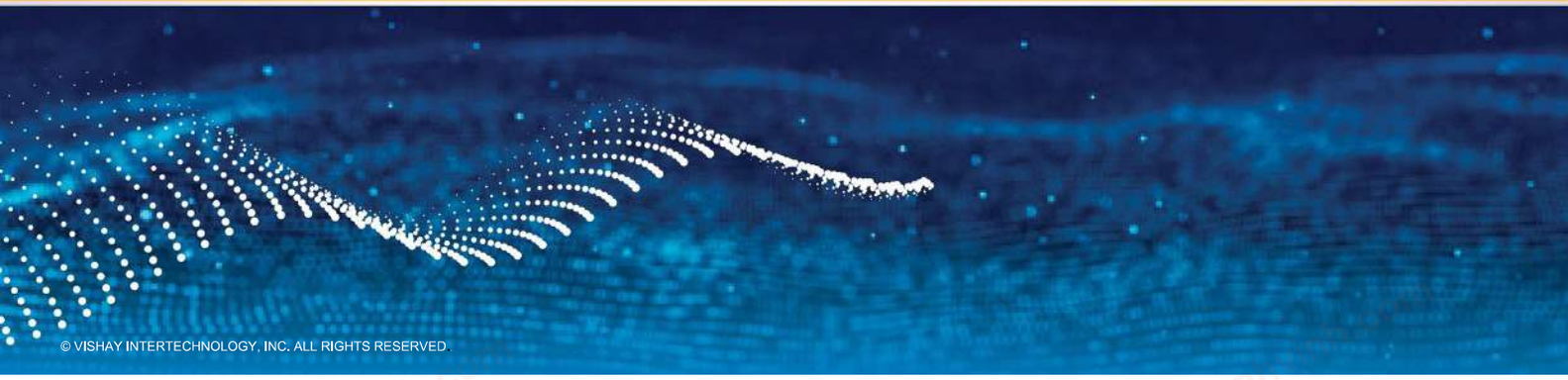

© VISHAY INTERTECHNOLOGY, INC. ALL RIGHTS RESERVED.

Summary

- No performance change of the part
- Adjusted resolution as this was wrongly stated in the current datasheet
- Adjusted spectral response (ALS & white channel)
- Renamed bits naming for readability purpose
- Added ID – register information
- Declared configuration registers as R / W (read and write)

© VISHAY INTERTECHNOLOGY, INC. ALL RIGHTS RESERVED.

chanhvinh.com

Page1

Rev. 1.6, 28-Apr-2022

AMBIENT LIGHT FUNCTION

- Filtron™ technology adaption: close to real human eye response
- O-Trim™ technology adoption: ALS output tolerance ≤ 10 %
- 16-bit dynamic range for ambient light detection from 0 lx to about 120 klx with resolution down to 0.0036 lx/ct, supports low transmittance (dark) lens design
- 100 Hz and 120 Hz flicker noise rejection
- Excellent temperature compensation
- High dynamic detection resolution
- Software shutdown mode control

Rev 1.7, 28-Nov-2023

AMBIENT LIGHT FUNCTION

- 16-bit dynamic range for ambient light detection from 0 lx to about 140 klx with resolution down to 0.0042 lx/ct, supports low transmittance (dark) lens design
- 100 Hz and 120 Hz flicker noise rejection
- Excellent temperature compensation
- High dynamic detection resolution
- Software shutdown mode control

© VISHAY INTERTECHNOLOGY, INC. ALL RIGHTS RESERVED.

VISHAY The DNA of tech.™

Page1

Rev. 1.6, 28-Apr-2022

PRODUCT SUMMARY

PART NUMBER	OPERATING RANGE (mm)	OPERATING VOLTAGE RANGE (V)	I²C BUS VOLTAGE RANGE (V)	AMBIENT LIGHT RANGE (lx)	AMBIENT LIGHT RESOLUTION (lx)	OUTPUT CODE	ADC RESOLUTION PROXIMITY / AMBIENT LIGHT
VEML6030	n/a	2.5 to 3.6	1.7 to 3.6	0 to 120 000	0.0036	16 bit, I²C	- / 0.0036

Rev 1.7, 28-Nov-2023

PRODUCT SUMMARY

PART NUMBER	OPERATING RANGE (mm)	OPERATING VOLTAGE RANGE (V)	I²C BUS VOLTAGE RANGE (V)	AMBIENT LIGHT RANGE (lx)	AMBIENT LIGHT RESOLUTION (lx)	OUTPUT CODE	ADC RESOLUTION PROXIMITY / AMBIENT LIGHT
VEML6030	n/a	2.5 to 3.6	1.7 to 3.6	0 to 140 000	0.0042	16 bit, I²C	- / 0.0042

© VISHAY INTERTECHNOLOGY, INC. ALL RIGHTS RESERVED.

VISHAY The DNA of tech.™

chanhvinh.com

Page2

Rev. 1.6, 28-Apr-2022

ABSOLUTE MAXIMUM RATINGS (T_{amb} = 25 °C, unless otherwise specified)

PARAMETER	TEST CONDITION	SYMBOL	MIN.	MAX.	UNIT
Supply voltage		V_{DD}	0	4	V
Operation temperature range		T_{amb}	-25	+85	°C
Storage temperature range		T_{stg}	-25	+85	°C
Total power dissipation	T_{amb} ≤ 25 °C	P_{tot}	-	50	mW
Junction temperature		T_j	-	110	°C

BASIC CHARACTERISTICS (T_{amb} = 25 °C, unless otherwise specified)

PARAMETER	TEST CONDITION	SYMBOL	MIN.	TYP.	MAX.	UNIT
Supply voltage		V_{DD}	2.5	3.3	3.6	V
Shut down current [2]	V_{DD} is 3.3 V	I_{sd}	-	0.5	-	µA
Operation mode current [1]	V_{DD} is 3.3 V, PSM = 11, refresh time 4100 ms	I_{DD}	-	2	-	µA
	V_{DD} is 3.3 V, PSM = 00, refresh time 600 ms	I_{DD}	-	8	-	µA
	V_{DD} is 3.3 V, PSM_EN = 0, refresh time 100 ms	I_{DD}	-	45	-	µA
I²C clock rate range		f_{SCL}	10	-	400	kHz
I²C bus input H-level range	V_{DD} is 3.3 V	V_{ih}	1.3	-	3.6	V
I²C bus input L-level range	V_{DD} is 3.3 V	V_{il}	-0.3	-	0.4	V
Digital current out (low, current sink)		I_{ol}	3	-	-	mA
Digital resolution (LSB count)	with ALS_GAIN = "01"		-	0.0036	-	lx/step
Detectable minimum illuminance	with ALS_GAIN = "01"	$E_{V\,min.}$	-	0.0072	-	lx
Detectable maximum illuminance	with ALS_GAIN = "10"	$E_{V\,max.}$	-	120 000	-	lx
Dark offset [2]	with ALS_GAIN = "01"		-	3	-	step

Notes
(1) Light source: white LED
(2) Light conditions: dark

Rev 1.7, 28-Nov-2023

ABSOLUTE MAXIMUM RATINGS (T_{amb} = 25 °C, unless otherwise specified)

PARAMETER	TEST CONDITION	SYMBOL	MIN.	MAX.	UNIT
Supply voltage		V_{DD}	0	4	V
Ambient temperature range		T_{amb}	-25	+85	°C
Storage temperature range		T_{stg}	-25	+85	°C
Total power dissipation	T_{amb} ≤ 25 °C	P_{tot}	-	50	mW
Junction temperature		T_j	-	110	°C

BASIC CHARACTERISTICS (T_{amb} = 25 °C, unless otherwise specified)

PARAMETER	TEST CONDITION	SYMBOL	MIN.	TYP.	MAX.	UNIT
Supply voltage		V_{DD}	2.5	3.3	3.6	V
Shut down current [2]	V_{DD} is 3.3 V	I_{sd}	-	0.5	-	µA
Operation mode current [1]	V_{DD} is 3.3 V, PSM = mode 4	I_{DD}	-	2	-	µA
	V_{DD} is 3.3 V, PSM = mode 1	I_{DD}	-	8	-	µA
	V_{DD} is 3.3 V, PSM_EN = disable	I_{DD}	-	45	-	µA
I²C clock rate range		f_{SCL}	10	-	400	kHz
I²C bus input H-level range	V_{DD} is 3.3 V	V_{ih}	1.3	-	3.6	V
I²C bus input L-level range	V_{DD} is 3.3 V	V_{il}	-0.3	-	0.4	V
Digital current out (low, current sink)		I_{ol}	3	-	-	mA
Digital resolution (LSB count) [3]	with ALS_GAIN = x 2, ALS_IT = 800 ms		-	0.0042	-	lx/step
Detectable maximum illuminance [3]	with ALS_GAIN = x 1/8, ALS_IT = 25 ms	$E_{V\,max.}$	-	140 000	-	lx
Dark offset [2]	with ALS_GAIN = x 2, ALS_IT = 800 ms		-	3	-	step

© VISHAY INTERTECHNOLOGY, INC. ALL RIGHTS RESERVED.

Page2

Rev. 1.6, 28-Apr-2022

CIRCUIT BLOCK DIAGRAM

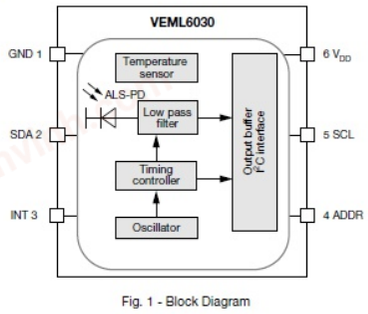

Fig. 1 - Block Diagram

Rev 1.7, 28-Nov-2023

CIRCUIT BLOCK DIAGRAM

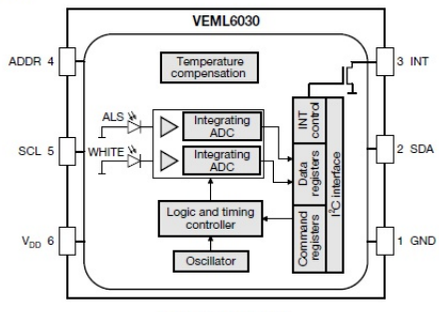

Fig. 1 - Block Diagram

© VISHAY INTERTECHNOLOGY, INC. ALL RIGHTS RESERVED.

chanhvinh.com

Page5

Rev. 1.6, 28-Apr-2022

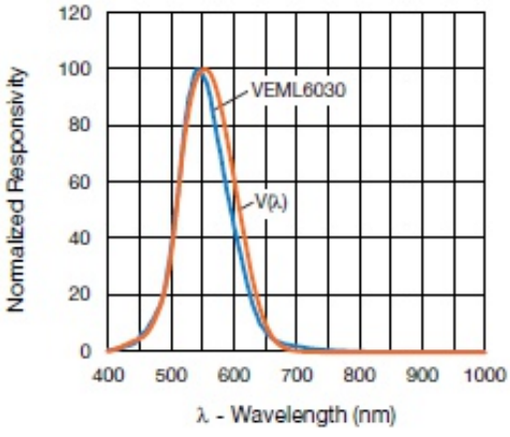

Fig. 5 - Spectral Response

Rev 1.7, 28-Nov-2023

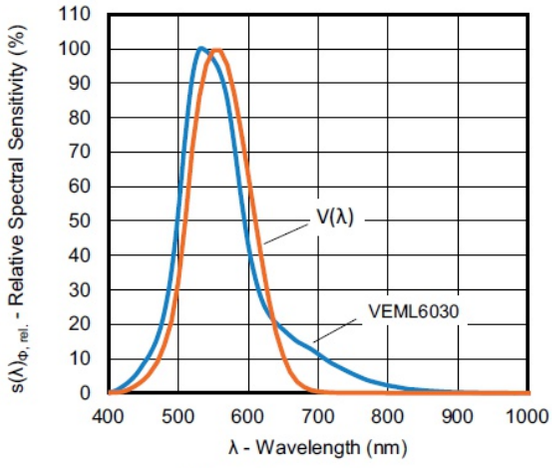

Fig. 5 - Spectral Response

© VISHAY INTERTECHNOLOGY, INC. ALL RIGHTS RESERVED.

VISHAY
The DNA of tech.™

Page5

Rev. 1.6, 28-Apr-2022

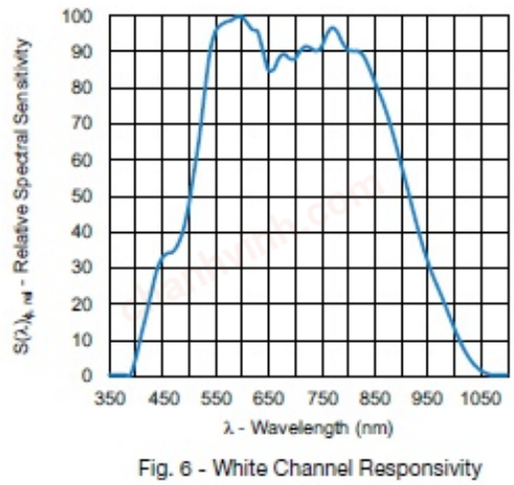

Fig. 6 - White Channel Responsivity

Rev 1.7, 28-Nov-2023

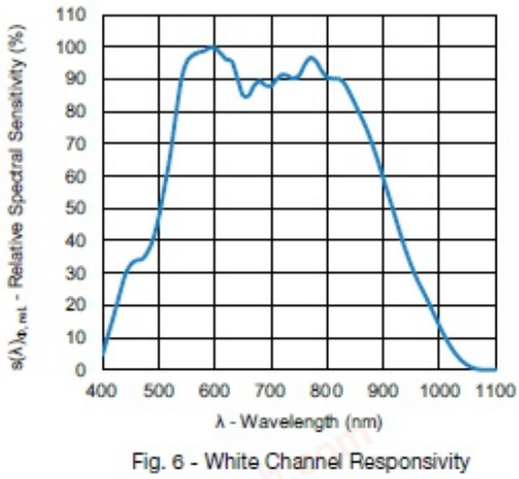

Fig. 6 - White Channel Responsivity

© VISHAY INTERTECHNOLOGY, INC. ALL RIGHTS RESERVED.

VISHAY
The DNA of tech.™

chanhvinh.com

Page5

Rev. 1.6, 28-Apr-2022

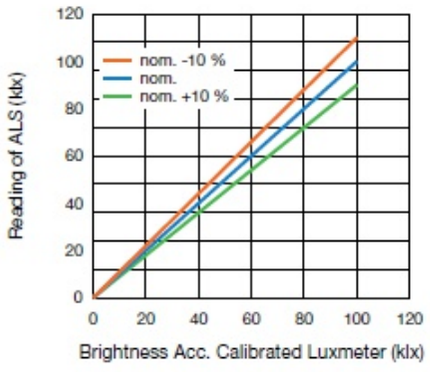

Fig. 8 - ALS measurement deviation between different light sources: ≤ 10 %

Rev 1.7, 28-Nov-2023

- Removed this figure.
- p2p tolerance discussion over different light sources is done in the application note and provides more detailed information, especially with regard to the non-linearity topic at higher illuminance level

© VISHAY INTERTECHNOLOGY, INC. ALL RIGHTS RESERVED.

Page7

Rev. 1.6, 28-Apr-2022

COMMAND REGISTER FORMAT				
COMMAND CODE	REGISTER NAME	BIT	FUNCTION / DESCRIPTION	R / W
00	ALS_CONF 0	15 : 0	ALS gain, integration time, interrupt, and shut down	W
01	ALS_WH	15 : 8	ALS high threshold window setting (MSB)	W
		7 : 0	ALS high threshold window setting (LSB)	W
02	ALS_WL	15 : 8	ALS low threshold window setting (MSB)	W
		7 : 0	ALS low threshold window setting (LSB)	W
03	Power saving	15 : 0	Set (15 : 3) 0000 0000 0000 0b	
04	ALS	15 : 8	MSB 8 bits data of whole ALS 16 bits	R
		7 : 0	LSB 8 bits data of whole ALS 16 bits	R
05	WHITE	15 : 8	MSB 8 bits data of whole WHITE 16 bits	R
		7 : 0	LSB 8 bits data of whole WHITE 16 bits	R
06	ALS_INT	15 : 0	ALS INT trigger event	R

Note
- Command code 0 default value is 01 = devices is shut down

Rev 1.7, 28-Nov-2023

COMMAND REGISTER FORMAT				
COMMAND CODE	REGISTER NAME	BIT	FUNCTION / DESCRIPTION	R / W
00	ALS_CONF 0	15 : 0	ALS gain, integration time, interrupt, and shut down	R / W
01	ALS_WH	15 : 8	ALS high threshold window setting (MSB)	R / W
		7 : 0	ALS high threshold window setting (LSB)	R / W
02	ALS_WL	15 : 8	ALS low threshold window setting (MSB)	R / W
		7 : 0	ALS low threshold window setting (LSB)	R / W
03	Power saving	15 : 0	Set (15 : 3) 0000 0000 0000 0b	R / W
04	ALS	15 : 8	MSB 8 bits data of whole ALS 16 bits	R
		7 : 0	LSB 8 bits data of whole ALS 16 bits	R
05	WHITE	15 : 8	MSB 8 bits data of whole WHITE 16 bits	R
		7 : 0	LSB 8 bits data of whole WHITE 16 bits	R
06	ALS_INT	15 : 0	ALS INT trigger event	R
07	ID	15 : 0	Device ID	R

© VISHAY INTERTECHNOLOGY, INC. ALL RIGHTS RESERVED.

chanhvinh.com

Page7

Rev. 1.6, 28-Apr-2022

TABLE 1 - CONFIGURATION REGISTER #0

REGISTER NAME	BIT	FUNCTION / DESCRIPTION	R / W
Reserved	15 : 13	Set 000b	W
ALS_GAIN	12 : 11	Gain selection 00 = ALS gain x 1 01 = ALS gain x 2 10 = ALS gain x (1/8) 11 = ALS gain x (1/4)	W
reserved	10	Set 0b	W
ALS_IT	9 : 6	ALS integration time setting 1100 = 25 ms 1000 = 50 ms 0000 = 100 ms 0001 = 200 ms 0010 = 400 ms 0011 = 800 ms	W
ALS_PERS	5 : 4	ALS persistence protect number setting 00 = 1 01 = 2 10 = 4 11 = 8	W
Reserved	3 : 2	Set 00b	W
ALS_INT_EN	1	ALS interrupt enable setting 0 = ALS INT disable 1 = ALS INT enable	W
ALS_SD	0	ALS shut down setting 0 = ALS power on 1 = ALS shut down	W

Rev 1.7, 28-Nov-2023

TABLE 1 - CONFIGURATION REGISTER #0

REGISTER NAME	BIT	FUNCTION / DESCRIPTION	R / W
Reserved	15 : 13	Set 000b	R / W
ALS_GAIN	12 : 11	Gain selection 00 – ALS gain x 1 01 – ALS gain x 2 10 = ALS gain x (1/8) 11 = ALS gain x (1/4)	R / W
reserved	10	Set 0b	R / W
ALS_IT	9 : 6	ALS integration time setting 1100 – 25 ms 1000 = 50 ms 0000 = 100 ms 0001 = 200 ms 0010 – 400 ms 0011 – 800 ms	R / W
ALS_PERS	5 : 4	ALS persistence protect number setting 00 – 1 01 – 2 10 – 4 11 – 8	R / W
Reserved	3 : 2	Set 00b	R / W
ALS_INT_EN	1	ALS interrupt enable setting 0 – ALS INT disable 1 – ALS INT enable	R / W
ALS_SD	0	ALS shut down setting 0 – ALS power on 1 – ALS shut down	R / W

© VISHAY INTERTECHNOLOGY, INC. ALL RIGHTS RESERVED.

VISHAY
The DNA of tech.™

Page8

Rev. 1.6, 28-Apr-2022

TABLE 4 - POWER SAVING MODES

COMMAND CODE	REGISTER NAME	BIT	FUNCTION / DESCRIPTION	R / W
03	PSM	2 : 1	Power saving mode; see table "Refresh time" 00 = mode 1 01 = mode 2 10 = mode 3 11 = mode 4	W
	PSM_EN	0	Power saving mode enable setting 0 = disable 1 = enable	W

Rev 1.7, 28-Nov-2023

TABLE 4 - POWER SAVING MODES

COMMAND CODE	REGISTER NAME	BIT	FUNCTION / DESCRIPTION	R / W
03	PSM	2 : 1	Power saving mode; see table "Refresh time" 00 = mode 1 01 = mode 2 10 = mode 3 11 = mode 4	R / W
	PSM_EN	0	Power saving mode enable setting 0 – disable 1 – enable	R / W

© VISHAY INTERTECHNOLOGY, INC. ALL RIGHTS RESERVED.

VISHAY
The DNA of tech.™

chanhvinh.com

Page9

Rev. 1.6, 28-Apr-2022

Command Code #6: Interrupt Status

Command code address = 06h. Bit 15 defines interrupt flag while trigger occurred due to data crossing low threshold windows. Bit 14 defines interrupt flag while trigger occurred due to data crossing high threshold windows.

TABLE 7 - INTERRUPT STATUS #6		
Bit 15	Bit 14	Bit 13 to 0
int_th_low	int_th_high	reserved
Description		
int_th_low		Read bit. Indicated a low threshold exceed
int_th_high		Read bit. Indicated a high threshold exceed

REFRESH TIME DETERMINATION OF PSM

VEML6030's refresh time can be determined by PSM and ALS_IT setting in power saving mode (PSM). Cooperating with the command register setting, the designer has a flexible method in defining the timing, power consumption, and sensitivity for light data collection.

Rev 1.7, 28-Nov-2023

Command Code #6: Interrupt Status

Command code address = 06h. Bit 15 defines interrupt flag while trigger occurred due to data crossing low threshold windows. Bit 14 defines interrupt flag while trigger occurred due to data crossing high threshold windows.

TABLE 7 - INTERRUPT STATUS #6		
Bit 15	Bit 14	Bit 13 to 0
int_th_low	int_th_high	reserved
Description		
int_th_low		Read bit. Indicated a low threshold exceed
int_th_high		Read bit. Indicated a high threshold exceed

Command Code #7: ID Register

Command code address = 07h. The low byte of the ID register contains the device specific ID code 81h. The high byte contains a code that depends on the chosen slave address option: either 0xC4 for a device with slave address 0x20, or 0xD4 for a device with slave address 0x90

TABLE 8 - DEVICE ID #7	
Bit 15 to 8	Bit 7 to 0
Slave address option code	Device ID code
Description	
Slave address option code	Slave address specific ID For slave address option 0x20: 11000100 = 0xC4 For slave address option 0x90: 11010100 = 0xD4
Device ID code	Fixed device ID: 10000001 = 0x81

REFRESH TIME DETERMINATION OF PSM

VEML6030's refresh time can be determined by PSM and ALS_IT setting in power saving mode (PSM). Cooperating with the command register setting, the designer has a flexible method in defining the timing, power consumption, and sensitivity for light data collection.

© VISHAY INTERTECHNOLOGY, INC. ALL RIGHTS RESERVED.

VISHAY The DNA of tech.™

Page9

Rev. 1.6, 28-Apr-2022

Rev 1.7, 28-Nov-2023

REFRESH TIME, I_{DD}, AND RESOLUTION RELATION					
ALS_GAIN	PSM	ALS_IT	REFRESH TIME (ms)	I_{DD} (µA)	RESOLUTION (lx/bit)
01	00	0000	600	8	0.0288
01	01	0000	1100	5	0.0288
01	10	0000	2100	3	0.0288
01	11	0000	4100	2	0.0288
01	00	0001	700	13	0.0144
01	01	0001	1200	8	0.0144
01	10	0001	2200	5	0.0144
01	11	0001	4200	3	0.0144
01	00	0010	900	20	0.0072
01	01	0010	1400	13	0.0072
01	10	0010	2400	8	0.0072
01	11	0010	4400	5	0.0072
01	00	0011	1300	28	0.0036
01	01	0011	1800	20	0.0036
01	10	0011	2800	13	0.0036
01	11	0011	4800	8	0.0036

REFRESH TIME, I_{DD}, AND RESOLUTION RELATION					
ALS_GAIN	PSM	ALS_IT (ms)	REFRESH TIME (ms)	I_{DD} (µA)	RESOLUTION (lx/bit)
x2	Mode 1	100	600	8	0.0336
x2	Mode 2	100	1100	5	0.0336
x2	Mode 3	100	2100	3	0.0336
x2	Mode 4	100	4100	2	0.0336
x2	Mode 1	200	700	13	0.0168
x2	Mode 2	200	1200	8	0.0168
x2	Mode 3	200	2200	5	0.0168
x2	Mode 4	200	4200	3	0.0168
x2	Mode 1	400	900	20	0.0084
x2	Mode 2	400	1400	13	0.0084
x2	Mode 3	400	2400	8	0.0084
x2	Mode 4	400	4400	5	0.0084
x2	Mode 1	800	1300	28	0.0042
x2	Mode 2	800	1800	20	0.0042
x2	Mode 3	800	2800	13	0.0042
x2	Mode 4	800	4800	8	0.0042

© VISHAY INTERTECHNOLOGY, INC. ALL RIGHTS RESERVED.

VISHAY The DNA of tech.™

chanhvinh.com

VEML6030 – Application Note

Change from Rev. 20-Sep-2019 to **Rev. 17-Jan-2024**

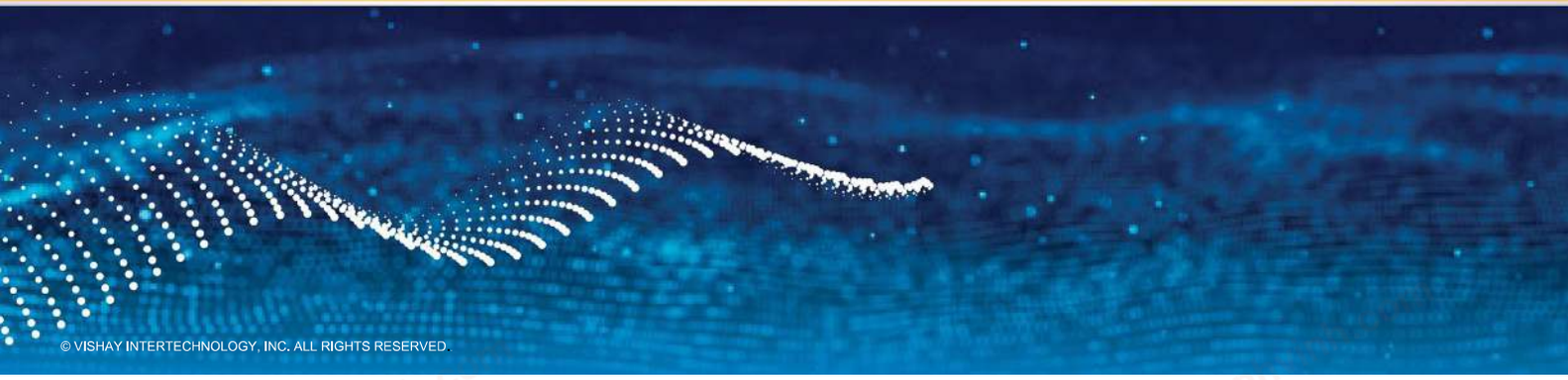

© VISHAY INTERTECHNOLOGY, INC. ALL RIGHTS RESERVED.

Summary

- No performance change of the part
- Adjusted resolution and maximum detectable illuminance as this was wrongly stated in the current appnote from 0.0036 lux/count and 120kLux to 0.0042 lux/count and 140 kLux, respectively
- Adjusted spectral response (ALS & white channel)
- Added information about integration time tolerance
- Renamed bits naming for readability purpose
- Added ID – register information
- Declared configuration bits as R / W
- Added examples and optimized handling instructions concerning the correction formula

© VISHAY INTERTECHNOLOGY, INC. ALL RIGHTS RESERVED.

chanhvinh.com

Page 1

Rev. 20-Sep-2019

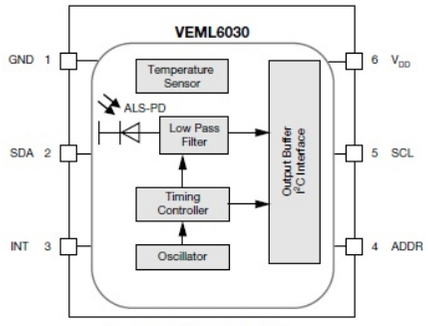

Fig. 1 - VEML6030 Block Diagram

Rev. 17-Jan-2024

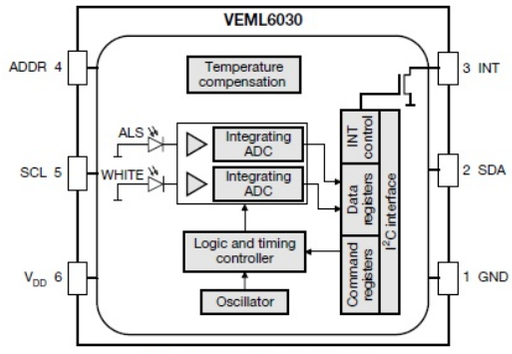

Fig. 1 - VEML6030 Block Diagram

© VISHAY INTERTECHNOLOGY, INC. ALL RIGHTS RESERVED.

Page 2

Rev. 20-Sep-2019

COMMAND REGISTER FORMAT				
COMMAND CODE	REGISTER NAME	BIT	FUNCTION / DESCRIPTION	R / W
00	ALS_CONF 0	15 : 0	ALS gain, integration time, interrupt, and shutdown	W
01	ALS_WH	15 : 8	ALS high threshold window setting (MSB)	W
		7 : 0	ALS high threshold window setting (LSB)	W
02	ALS_WL	15 : 8	ALS low threshold window setting (MSB)	W
		7 : 0	ALS low threshold window setting (LSB)	W
03	Power saving	15 : 0	Set (15 : 3) 0000 0000 0000 0b	
04	ALS	15 : 8	MSB 8 bits data of whole ALS 16 bits	R
		7 : 0	LSB 8 bits data of whole ALS 16 bits	R
05	WHITE	15 : 8	MSB 8 bits data of whole WHITE 16 bits	R
		7 : 0	LSB 8 bits data of whole WHITE 16 bits	R
06	ALS_INT	15 : 0	ALS INT trigger event	R

Rev. 17-Jan-2024

COMMAND REGISTER FORMAT				
COMMAND CODE	REGISTER NAME	BIT	FUNCTION / DESCRIPTION	R / W
00	ALS_CONF 0	15 : 0	ALS gain, integration time, interrupt, and shutdown	R / W
01	ALS_WH	15 : 8	ALS high threshold window setting (MSB)	R / W
		7 : 0	ALS high threshold window setting (LSB)	R / W
02	ALS_WL	15 : 8	ALS low threshold window setting (MSB)	R / W
		7 : 0	ALS low threshold window setting (LSB)	R / W
03	Power saving	15 : 0	Set (15 : 3) 0000 0000 0000 0b	R / W
04	ALS	15 : 8	MSB 8 bits data of whole ALS 16 bits	R
		7 : 0	LSB 8 bits data of whole ALS 16 bits	R
05	WHITE	15 : 8	MSB 8 bits data of whole WHITE 16 bits	R
		7 : 0	LSB 8 bits data of whole WHITE 16 bits	R
06	ALS_INT	15 : 0	ALS INT trigger event	R
07	ID	15 : 0	Device ID	R

© VISHAY INTERTECHNOLOGY, INC. ALL RIGHTS RESERVED.

chanhvinh.com

Page 4

Rev. 20-Sep-2019

Command Code ALS_IT

Command code: 00, bits 9 to 6

COMMAND REGISTER FORMAT			
REGISTER NAME	BIT	FUNCTION / DESCRIPTION	R / W
ALS_IT	9 : 6	ALS integration time setting 1100 = 25 ms 1000 = 50 ms 0000 = 100 ms 0001 = 200 ms 0010 = 400 ms 0011 = 800 ms	~~W~~

Remark: the standard integration time is 100 ms. If a very high resolution is needed, one may increase this integration time up to 800 ms. If faster measurement results are needed, it can be decreased down to 25 ms.

Rev. 17-Jan-2024

Command Code ALS_IT

Command code: 00, bits 9 to 6

COMMAND REGISTER FORMAT			
REGISTER NAME	BIT	FUNCTION / DESCRIPTION	R / W
ALS_IT	9 : 6	ALS integration time setting 1100 = 25 ms 1000 = 50 ms 0000 = 100 ms 0001 = 200 ms 0010 = 400 ms 0011 = 800 ms	R / W

Remark: the standard integration time is 100 ms. If a very high resolution is needed, one may increase this integration time up to 800 ms. If faster measurement results are needed, it can be decreased down to 25 ms. For the integration time a tolerance of ± 30 % can be assumed. This tolerance should also be considered during the read out of the measurement results.

© VISHAY INTERTECHNOLOGY, INC. ALL RIGHTS RESERVED.

VISHAY The DNA of tech.™

Page 5

Rev. 20-Sep-2019

RESOLUTION AND MAXIMUM DETECTION RANGE								
	GAIN 2	GAIN 1	GAIN 1/4	GAIN 1/8	GAIN 2	GAIN 1	GAIN 1/4	GAIN 1/8
IT (ms)	TYPICAL RESOLUTION				MAXIMUM POSSIBLE ILLUMINATION			
800	0.0036	0.0072	0.0288	0.0576	236	472	1887	3775
400	0.0072	0.0144	0.0576	0.1152	472	944	3775	7550
200	0.0144	0.0288	0.1152	0.2304	944	1887	7550	15 099
100	0.0288	0.0576	0.2304	0.4608	1887	3775	15 099	30 199
50	0.0576	0.1152	0.4608	0.9216	3775	7550	30 199	60 398
25	0.1152	0.2304	0.9216	1.8432	7550	15 099	60 398	120 796

Note

- For illuminations > 1000 lx a correction formula needs to be applied. Please refer to the section "APPLICATION-DEPENDENT LUX CALCULATION" for further details on how this is done

Example:

If the 16-bit word of the ALS data shows: 0000 0101 1100 1000 = 1480 (dec.), the programmed ALS gain is 1/4, and the integration time is 100 ms. The corresponding lux level is:

light level [lx] = 1480 x ~~0.2304~~ = ~~341~~ lx

Rev. 17-Jan-2024

RESOLUTION AND MAXIMUM DETECTION RANGE								
	GAIN 2	GAIN 1	GAIN 1/4	GAIN 1/8	GAIN 2	GAIN 1	GAIN 1/4	GAIN 1/8
IT (ms)	TYPICAL RESOLUTION (lx / cnt)				MAXIMUM POSSIBLE ILLUMINATION (lx)			
800	0.0042	0.0084	0.0336	0.0672	275	550	2202	4404
400	0.0084	0.0168	0.0672	0.1344	550	1101	4404	8808
200	0.0168	0.0336	0.1344	0.2688	1101	2202	8808	17 616
100	0.0336	0.0672	0.2688	0.5376	2202	4404	17 616	35 232
50	0.0672	0.1344	0.5376	1.0752	4404	8808	35 232	70 463
25	0.1344	0.2688	1.0752	2.1504	8808	17 616	70 463	140 926

Note

- For illuminations > 1000 lx a correction formula needs to be applied. Please refer to the section "APPLICATION-DEPENDENT LUX CALCULATION" for further details on how this is done

Example:

If the 16-bit word of the ALS data shows: 0001 0101 1100 1101 = 5581 (dec.), the programmed ALS gain is 1/4, and the integration time is 100 ms. The corresponding lux level is:

light level (uncorrected) = 5581 x 0.2688 = 1500 lx

Correcting the lux value with the help of the correction formula yields:

$a \times (1500\ lux)^4 + b \times (1500\ lux)^3 + c \times (1500\ lux)^2 + d \times (1500\ lux) = 1658\ lux$

With the polynomial coefficients:

$a = 6.0135^{-13}$
$b = -9.3924^{-9}$
$c = 8.1488^{-5}$
$d = 1.0023$

© VISHAY INTERTECHNOLOGY, INC. ALL RIGHTS RESERVED.

VISHAY The DNA of tech.™

chanhvinh.com

Page 5

Rev. 20-Sep-2019

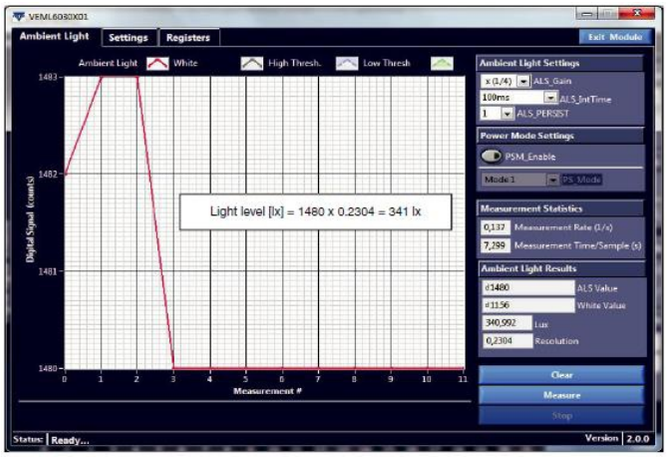

Rev. 17-Jan-2024

- Removed this figure because it was made with outdated sensitivity factors

© VISHAY INTERTECHNOLOGY, INC. ALL RIGHTS RESERVED.

Page 10 – corrected axis labels

Rev. 20-Sep-2019

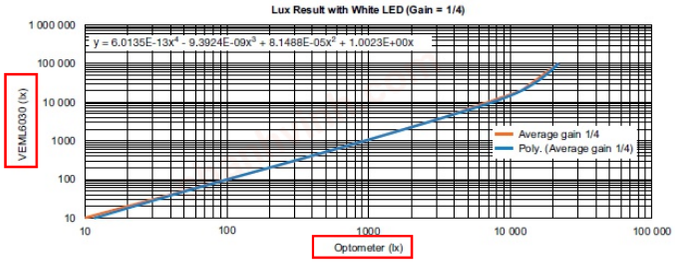

Rev. 17-Jan-2024

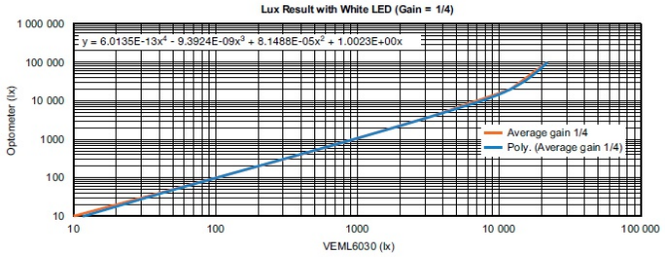

© VISHAY INTERTECHNOLOGY, INC. ALL RIGHTS RESERVED.

chanhvinh.com

Page 11

Rev. 20-Sep-2019

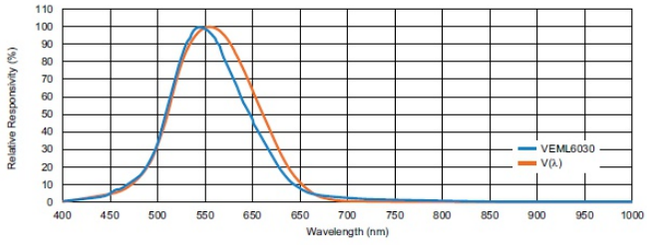

Fig. 12 - Spectral Response ALS Channel

Rev. 17-Jan-2024

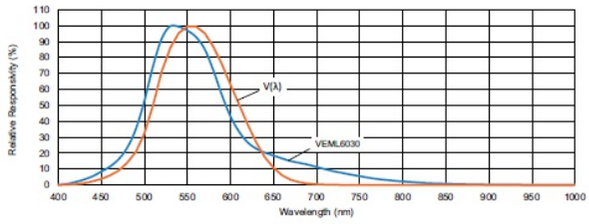

Fig. 11 - Spectral Response ALS Channel

© VISHAY INTERTECHNOLOGY, INC. ALL RIGHTS RESERVED.

Page 16

Rev. 20-Sep-2019

REFRESH TIME, I_{DD}, AND RESOLUTION RELATION

ALS_GAIN	PSM	ALS_IT	REFRESH TIME (ms)	I_{DD} (µA)	RESOLUTION (lx/bit)
01	00	0000	600	8	0.0288
01	01	0000	1100	5	0.0288
01	10	0000	2100	3	0.0288
01	11	0000	4100	2	0.0288
01	00	0001	700	13	0.0144
01	01	0001	1200	8	0.0144
01	10	0001	2200	5	0.0144
01	11	0001	4200	3	0.0144
01	00	0010	900	20	0.0072
01	01	0010	1400	13	0.0072
01	10	0010	2400	8	0.0072
01	11	0010	4400	5	0.0072
01	00	0011	1300	28	0.0036
01	01	0011	1800	20	0.0036
01	10	0011	2800	13	0.0036
01	11	0011	4800	8	0.0036

Rev. 17-Jan-2024

REFRESH TIME, I_{DD}, AND RESOLUTION RELATION

ALS_GAIN	PSM	ALS_IT (ms)	REFRESH TIME (ms)	I_{DD} (µA)	RESOLUTION (lx/bit)
x2	Mode 1	100	600	8	0.0336
x2	Mode 2	100	1100	5	0.0336
x2	Mode 3	100	2100	3	0.0336
x2	Mode 4	100	4100	2	0.0336
x2	Mode 1	200	700	13	0.0168
x2	Mode 2	200	1200	8	0.0168
x2	Mode 3	200	2200	5	0.0168
x2	Mode 4	200	4200	3	0.0168
x2	Mode 1	400	900	20	0.0084
x2	Mode 2	400	1400	13	0.0084
x2	Mode 3	400	2400	8	0.0084
x2	Mode 4	400	4400	5	0.0084
x2	Mode 1	800	1300	28	0.0042
x2	Mode 2	800	1800	20	0.0042
x2	Mode 3	800	2800	13	0.0042
x2	Mode 4	800	4800	8	0.0042

© VISHAY INTERTECHNOLOGY, INC. ALL RIGHTS RESERVED.

chanhvinh.com

VEML7700 –Datasheet update

Change from Rev. 1.6 28-Apr-2022 to Rev 1.7 29-Nov-2023

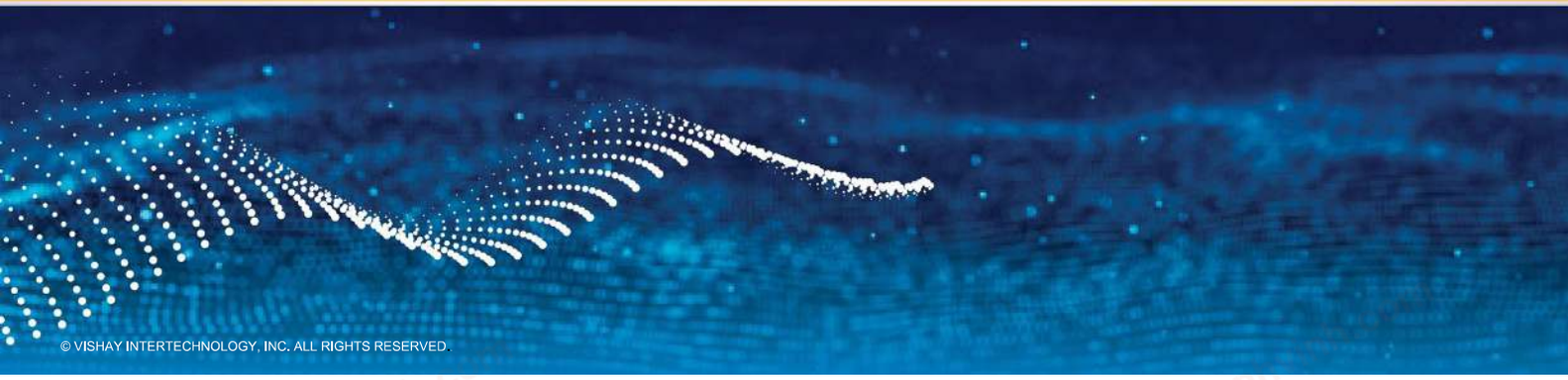

© VISHAY INTERTECHNOLOGY, INC. ALL RIGHTS RESERVED.

Summary

- No performance change of the part
- Adjusted resolution and maximum detectable illuminance as this was wrongly stated in the current datasheet
- Adjusted spectral response (ALS & white channel)
- Renamed bits naming for readability purpose
- Added ID – register information
- Declared configuration bits as R / W

© VISHAY INTERTECHNOLOGY, INC. ALL RIGHTS RESERVED.

chanhvinh.com

Page1

Rev. 1.6 28-Apr-2022

AMBIENT LIGHT FUNCTION

- ~~Filtron™ technology adaption: close to real human eye response~~
- ~~O-Trim™ technology adoption: ALS output tolerance ≤ 10 %~~
- 16-bit dynamic range for ambient light detection from 0 lx to about ~~120~~ klx with resolution down to ~~0.0036~~ lx/ct, supports low transmittance (dark) lens design
- 100 Hz and 120 Hz flicker noise rejection
- Excellent temperature compensation
- High dynamic detection resolution
- Software shutdown mode control

Rev 1.7, 29-Nov-2023

AMBIENT LIGHT FUNCTION

- 16-bit dynamic range for ambient light detection from 0 lx to about 140 klx with resolution down to 0.0042 lx/ct, supports low transmittance (dark) lens design
- 100 Hz and 120 Hz flicker noise rejection
- Excellent temperature compensation
- High dynamic detection resolution
- Software shutdown mode control

© VISHAY INTERTECHNOLOGY, INC. ALL RIGHTS RESERVED.

VISHAY
The DNA of tech.™

chanhvinh.com

Page1

Rev. 1.6 28-Apr-2022

PRODUCT SUMMARY

PART NUMBER	~~OPERATING RANGE (mm)~~	OPERATING VOLTAGE RANGE (V)	I²C BUS VOLTAGE RANGE (V)	AMBIENT LIGHT RANGE (lx)	AMBIENT LIGHT RESOLUTION (lx)	OUTPUT CODE	ADC RESOLUTION PROXIMITY / AMBIENT LIGHT
VEML7700	~~n/a~~	2.5 to 3.6	1.7 to 3.6	0 to ~~120~~ 000	~~0.0036~~	16 bit, I²C	- / ~~0.0036~~

Rev 1.7, 29-Nov-2023

PRODUCT SUMMARY

PART NUMBER	OPERATING VOLTAGE RANGE (V)	I²C BUS VOLTAGE RANGE (V)	AMBIENT LIGHT RANGE (lx)	AMBIENT LIGHT RESOLUTION (lx)	OUTPUT CODE	ADC RESOLUTION PROXIMITY / AMBIENT LIGHT
VEML7700	2.5 to 3.6	1.7 to 3.6	0 to 140 000	0.0042	16 bit, I²C	- / 0.0042

© VISHAY INTERTECHNOLOGY, INC. ALL RIGHTS RESERVED.

VISHAY
The DNA of tech.™

chanhvinh.com

Page 2

Rev. 1.6 28-Apr-2022

ABSOLUTE MAXIMUM RATINGS (T_{amb} = 25 °C, unless otherwise specified)

PARAMETER	TEST CONDITION	SYMBOL	MIN.	MAX.	UNIT
Supply voltage		V_{DD}	0	4	V
Operation temperature range		T_{amb}	-25	+85	°C
Storage temperature range		T_{stg}	-25	+85	°C
Total power dissipation	T_{amb} ≤ 25 °C	P_{tot}	-	50	mW
Junction temperature		T_j	-	110	°C

BASIC CHARACTERISTICS (T_{amb} = 25 °C, unless otherwise specified)

PARAMETER	TEST CONDITION	SYMBOL	MIN.	TYP.	MAX.	UNIT
Supply voltage		V_{DD}	2.5	3.3	3.6	V
Shut down current [2]	V_{DD} is 3.3 V	I_{sd}	-	0.5	-	µA
Operation mode current [1]	V_{DD} is 3.3 V, PSM = 11, refresh time 4100 ms	I_{DD}	-	2	-	µA
	V_{DD} is 3.3 V, PSM = 00, refresh time 600 ms	I_{DD}	-	8	-	µA
	V_{DD} is 3.3 V, PSM_EN = 0, refresh time 100 ms	I_{DD}	-	45	-	µA
I²C clock rate range		f_{SCL}	10	-	400	kHz
I²C bus input H-level range	V_{DD} is 3.3 V	V_{ih}	1.3	-	3.6	V
I²C bus input L-level range	V_{DD} is 3.3 V	V_{il}	-0.3	-	0.4	V
Digital current out (low, current sink)		I_{ol}	3	-	-	mA
Digital resolution (LSB count)	with ALS_GAIN = "01"		-	0.0036	-	lx/step
Detectable minimum illuminance	with ALS_GAIN = "01"	$E_{V\,min.}$	-	0.0072	-	lx
Detectable maximum illuminance	with ALS_GAIN = "10"	$E_{V\,max.}$	-	120 000	-	lx
Dark offset [2]	with ALS_GAIN = "01"		-	3	-	step

Notes
(1) Light source: white LED
(2) Light conditions: dark

© VISHAY INTERTECHNOLOGY, INC. ALL RIGHTS RESERVED.

Rev 1.7, 29-Nov-2023

ABSOLUTE MAXIMUM RATINGS (T_{amb} = 25 °C, unless otherwise specified)

PARAMETER	TEST CONDITION	SYMBOL	MIN.	MAX.	UNIT
Supply voltage		V_{DD}	0	4	V
Operation temperature range		T_{amb}	-25	+85	°C
Storage temperature range		T_{stg}	-25	+85	°C
Total power dissipation	T_{amb} ≤ 25 °C	P_{tot}	-	50	mW
Junction temperature		T_j	-	100	°C

BASIC CHARACTERISTICS (T_{amb} = 25 °C, unless otherwise specified)

PARAMETER	TEST CONDITION	SYMBOL	MIN.	TYP.	MAX.	UNIT
Supply voltage		V_{DD}	2.5	3.3	3.6	V
Shut down current [2]	V_{DD} is 3.3 V	I_{sd}	-	0.5	-	µA
Operation mode current [1]	V_{DD} is 3.3 V, PSM = 11, refresh time 4100 ms	I_{DD}	-	2	-	µA
	V_{DD} is 3.3 V, PSM = 00, refresh time 600 ms	I_{DD}	-	8	-	µA
	V_{DD} is 3.3 V, PSM_EN = 0, refresh time 100 ms	I_{DD}		45	-	µA
I²C clock rate range		f_{SCL}	10	-	400	kHz
I²C bus input H-level range	V_{DD} is 3.3 V	V_{ih}	1.3	-	3.6	V
I²C bus input L-level range	V_{DD} is 3.3 V	V_{il}	-0.3	-	0.4	V
Digital current out (low, current sink)		I_{ol}	3	-	-	mA
Digital resolution (LSB count) [3]	With ALS_GAIN = x 2, ALS_IT = 800 ms		-	0.0042	-	lx/step
Detectable maximum illuminance [3]	With ALS_GAIN = x 1/8, ALS_IT = 25 ms	$E_{V\,max.}$	-	140 000	-	lx
Dark offset [2]	With ALS_GAIN = x 2, ALS_IT = 800 ms		-	3	-	step

Page 2

Rev. 1.6 28-Apr-2022

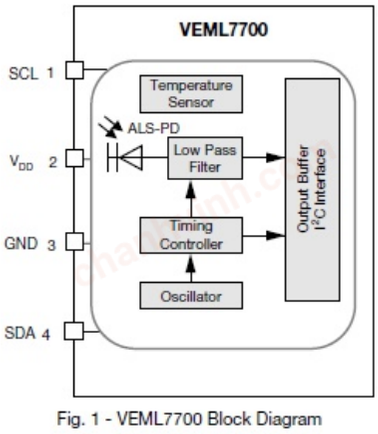

Fig. 1 - VEML7700 Block Diagram

Rev 1.7, 29-Nov-2023

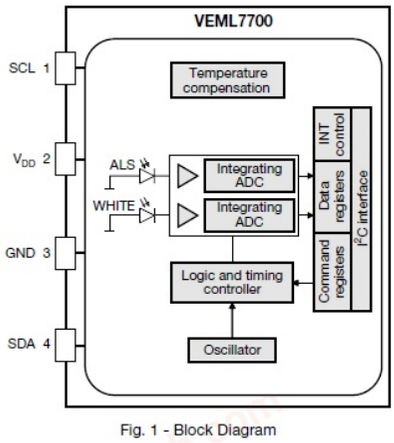

Fig. 1 - Block Diagram

© VISHAY INTERTECHNOLOGY, INC. ALL RIGHTS RESERVED.

chanhvinh.com

Page 5

Rev. 1.6 28-Apr-2022

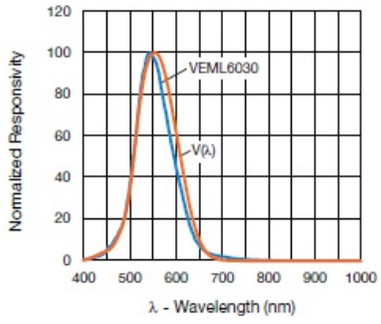

Fig. 5 - Spectral Response

Rev 1.7, 29-Nov-2023

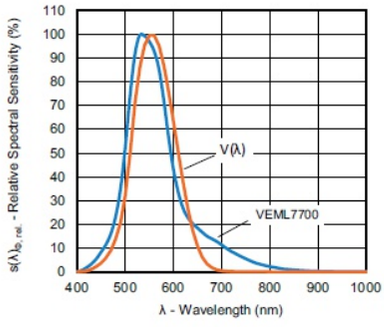

Fig. 5 - Spectral Response

© VISHAY INTERTECHNOLOGY, INC. ALL RIGHTS RESERVED.

Page5

Rev. 1.6 28-Apr-2022

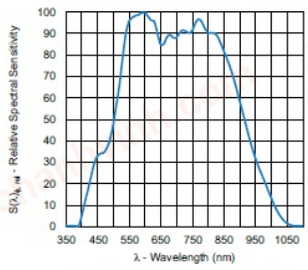

Fig. 6 - White Channel Responsivity

Rev 1.7, 29-Nov-2023

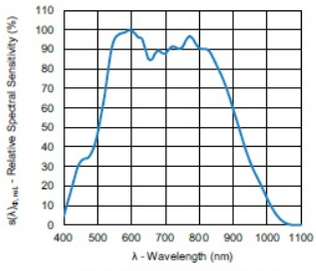

Fig. 6 - White Channel Responsivity

© VISHAY INTERTECHNOLOGY, INC. ALL RIGHTS RESERVED.

chanhvinh.com

Page5

Rev. 1.6 28-Apr-2022

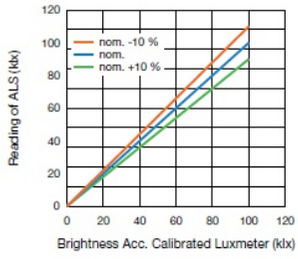

Fig. 8 - ALS measurement deviation between different light sources: ≤ 10 %

Rev 1.7, 29-Nov-2023

- Removed this figure.
- p2p tolerance discussion over different light sources is done in the application note and provides more detailed information, especially with regard to the non-linearity topic at higher illuminance level

© VISHAY INTERTECHNOLOGY, INC. ALL RIGHTS RESERVED.

Page 7

Rev. 1.6 28-Apr-2022

COMMAND REGISTER FORMAT				
COMMAND CODE	REGISTER NAME	BIT	FUNCTION / DESCRIPTION	R / W
00	ALS_CONF 0	15 : 0	ALS gain, integration time, interrupt, and shut down	W
01	ALS_WH	15 : 8	ALS high threshold window setting (MSB)	W
		7 : 0	ALS high threshold window setting (LSB)	W
02	ALS_WL	15 : 8	ALS low threshold window setting (MSB)	W
		7 : 0	ALS low threshold window setting (LSB)	W
03	Power saving	15 : 0	Set (15 : 3) 0000 0000 0000 0b	
04	ALS	15 : 8	MSB 8 bits data of whole ALS 16 bits	R
		7 : 0	LSB 8 bits data of whole ALS 16 bits	R
05	WHITE	15 : 8	MSB 8 bits data of whole WHITE 16 bits	R
		7 : 0	LSB 8 bits data of whole WHITE 16 bits	R
06	ALS_INT	15 : 0	ALS INT trigger event	R

Note

- Command code 0 default value is 01 = devices is shut down

Rev 1.7, 29-Nov-2023

COMMAND REGISTER FORMAT				
COMMAND CODE	REGISTER NAME	BIT	FUNCTION / DESCRIPTION	R / W
00	ALS_CONF_0	15 : 0	ALS gain, integration time, interrupt, and shutdown	R / W
01	ALS_WH	15 : 8	ALS high threshold window setting (MSB)	R / W
		7 : 0	ALS high threshold window setting (LSB)	R / W
02	ALS_WL	15 : 8	ALS low threshold window setting (MSB)	R / W
		7 : 0	ALS low threshold window setting (LSB)	R / W
03	Power saving	15 : 0	Set (15 : 3) 0000 0000 0000 0b	R / W
04	ALS	15 : 8	MSB 8 bits data of whole ALS 16 bits	R
		7 : 0	LSB 8 bits data of whole ALS 16 bits	R
05	WHITE	15 : 8	MSB 8 bits data of whole WHITE 16 bits	R
		7 : 0	LSB 8 bits data of whole WHITE 16 bits	R
06	ALS_INT	15 : 0	ALS INT trigger event	R
07	ID	15 : 0	Device ID	R

© VISHAY INTERTECHNOLOGY, INC. ALL RIGHTS RESERVED.

chanhvinh.com

Page 7

Rev. 1.6 28-Apr-2022

TABLE 1 - CONFIGURATION REGISTER #0			
REGISTER NAME	BIT	FUNCTION / DESCRIPTION	R / W
Reserved	15 : 13	Set 000b	W
ALS_GAIN	12 : 11	Gain selection 00 = ALS gain x 1 01 = ALS gain x 2 10 = ALS gain x (1/8) 11 = ALS gain x (1/4)	W
reserved	10	Set 0b	W
ALS_IT	9 : 6	ALS integration time setting 1100 = 25 ms 1000 = 50 ms 0000 = 100 ms 0001 = 200 ms 0010 = 400 ms 0011 = 800 ms	W
ALS_PERS	5 : 4	ALS persistence protect number setting 00 = 1 01 = 2 10 = 4 11 = 8	W
Reserved	3 : 2	Set 00b	W
ALS_INT_EN	1	ALS interrupt enable setting 0 = ALS INT disable 1 = ALS INT enable	W
ALS_SD	0	ALS shut down setting 0 = ALS power on 1 = ALS shut down	W

Rev 1.7, 29-Nov-2023

TABLE 1 - CONFIGURATION REGISTER #0			
REGISTER NAME	BIT	FUNCTION / DESCRIPTION	R / W
Reserved	15 : 13	Set 000b	R / W
ALS_GAIN	12 : 11	Gain selection 00 = ALS gain x 1 01 = ALS gain x 2 10 = ALS gain x (1/8) 11 = ALS gain x (1/4)	R / W
reserved	10	Set 0b	R / W
ALS_IT	9 : 6	ALS integration time setting 1100 = 25 ms 1000 = 50 ms 0000 = 100 ms 0001 = 200 ms 0010 = 400 ms 0011 = 800 ms	R / W
ALS_PERS	5 : 4	ALS persistence protect number setting 00 = 1 01 = 2 10 = 4 11 = 8	R / W
Reserved	3 : 2	Set 00b	R / W
ALS_INT_EN	1	ALS interrupt enable setting 0 = ALS INT disable 1 = ALS INT enable	R / W
ALS_SD	0	ALS shut down setting 0 = ALS power on 1 = ALS shut down	R / W

© VISHAY INTERTECHNOLOGY, INC. ALL RIGHTS RESERVED.

VISHAY The DNA of tech.™

Page 8

Rev. 1.6 28-Apr-2022

TABLE 4 - POWER SAVING MODES				
COMMAND CODE	REGISTER NAME	BIT	FUNCTION / DESCRIPTION	R / W
03	PSM	2 : 1	Power saving mode; see table "Refresh time" 00 = mode 1 01 = mode 2 10 = mode 3 11 = mode 4	W
	PSM_EN	0	Power saving mode enable setting 0 = disable 1 = enable	W

Rev 1.7, 29-Nov-2023

TABLE 4 - POWER SAVING MODES			
REGISTER NAME	BIT	FUNCTION / DESCRIPTION	R / W
PSM	2 : 1	Power saving mode; see table "Refresh time" 00 = mode 1 01 = mode 2 10 = mode 3 11 = mode 4	R / W
PSM_EN	0	Power saving mode enable setting 0 = disable 1 = enable	R / W

© VISHAY INTERTECHNOLOGY, INC. ALL RIGHTS RESERVED.

VISHAY The DNA of tech.™

chanhvinh.com

Page 9

Rev. 1.6 28-Apr-2022

Command Code #6: Interrupt Status

Command code address = 06h. Bit 15 defines interrupt flag while trigger occurred due to data crossing low threshold windows. Bit 14 defines interrupt flag while trigger occurred due to data crossing high threshold windows.

TABLE 7 - INTERRUPT STATUS #6

Bit 15	Bit 14	Bit 13 to 0
int_th_low	int_th_high	reserved
Description		
int_th_low	Read bit. Indicated a low threshold exceed	
int_th_high	Read bit. Indicated a high threshold exceed	

REFRESH TIME DETERMINATION OF PSM

VEML6030's refresh time can be determined by PSM and ALS_IT setting in power saving mode (PSM). Cooperating with the command register setting, the designer has a flexible method in defining the timing, power consumption, and sensitivity for light data collection.

© VISHAY INTERTECHNOLOGY, INC. ALL RIGHTS RESERVED.

Rev 1.7, 29-Nov-2023

Command Code #6: Interrupt Status

Command code address = 06h. Bit 15 defines interrupt flag while trigger occurred due to data crossing low threshold windows. Bit 14 defines interrupt flag while trigger occurred due to data crossing high threshold windows.

TABLE 7 - INTERRUPT STATUS #6

Bit 15	Bit 14	Bit 13 to 0
int_th_low	int_th_high	reserved
Description		
int_th_low	Read bit. Indicated a low threshold exceed	
int_th_high	Read bit. Indicated a high threshold exceed	

Command Code #7: ID Register

Command code address = 07h. The low byte of the ID register contains the device specific ID code 81h. The high byte contains a code that depends on the chosen slave address option: either 0xC4 for a device with slave address 0x20, or 0xD4 for a device with slave address 0x90

TABLE 8 - DEVICE ID #7

Bit 15 to 8	Bit 7 to 0
Slave address option code	Device ID code
Description	
Slave address option code	Slave address specific ID For slave address option 0x20: 11000100 = 0xC4 For slave address option 0x90: 11010100 = 0xD4
Device ID code	Fixed device ID: 10000001 = 0x81

REFRESH TIME DETERMINATION OF PSM

VEML6030's refresh time can be determined by PSM and ALS_IT setting in power saving mode (PSM). Cooperating with the command register setting, the designer has a flexible method in defining the timing, power consumption, and sensitivity for light data collection.

Page 9

Rev. 1.6 28-Apr-2022

REFRESH TIME, I_{DD}, AND RESOLUTION RELATION

ALS_GAIN	PSM	ALS_IT	REFRESH TIME (ms)	I_{DD} (µA)	RESOLUTION (lx/bit)
01	00	0000	600	8	0.0288
01	01	0000	1100	5	0.0288
01	10	0000	2100	3	0.0288
01	11	0000	4100	2	0.0288
01	00	0001	700	13	0.0144
01	01	0001	1200	8	0.0144
01	10	0001	2200	5	0.0144
01	11	0001	4200	3	0.0144
01	00	0010	900	20	0.0072
01	01	0010	1400	13	0.0072
01	10	0010	2400	8	0.0072
01	11	0010	4400	5	0.0072
01	00	0011	1300	28	0.0036
01	01	0011	1800	20	0.0036
01	10	0011	2800	13	0.0036
01	11	0011	4800	8	0.0036

Rev 1.7, 29-Nov-2023

REFRESH TIME, I_{DD}, AND RESOLUTION RELATION

ALS_GAIN	PSM	ALS_IT (ms)	REFRESH TIME (ms)	I_{DD} (µA)	RESOLUTION (lx/bit)
x2	Mode 1	100	600	8	0.0336
x2	Mode 2	100	1100	5	0.0336
x2	Mode 3	100	2100	3	0.0336
x2	Mode 4	100	4100	2	0.0336
x2	Mode 1	200	700	13	0.0168
x2	Mode 2	200	1200	8	0.0168
x2	Mode 3	200	2200	5	0.0168
x2	Mode 4	200	4200	3	0.0168
x2	Mode 1	400	900	20	0.0084
x2	Mode 2	400	1400	13	0.0084
x2	Mode 3	400	2400	8	0.0084
x2	Mode 4	400	4400	5	0.0084
x2	Mode 1	800	1300	28	0.0042
x2	Mode 2	800	1800	20	0.0042
x2	Mode 3	800	2800	13	0.0042
x2	Mode 4	800	4800	8	0.0042

© VISHAY INTERTECHNOLOGY, INC. ALL RIGHTS RESERVED.

chanhvinh.com

VEML7700 – Application Note

Change from Rev. 20-Sep-2019 to **Rev. 17-Jan-2024**

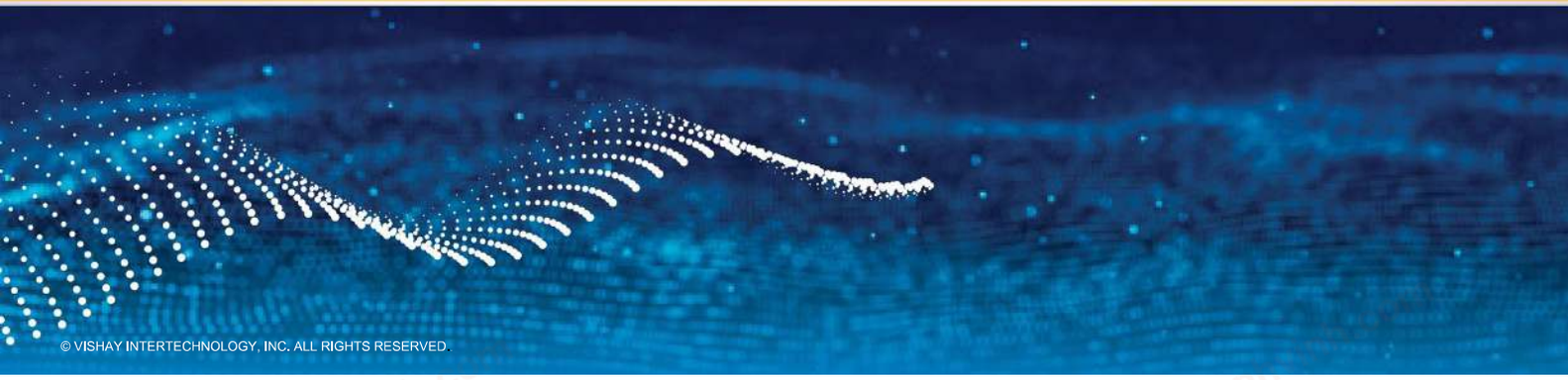

© VISHAY INTERTECHNOLOGY, INC. ALL RIGHTS RESERVED.

Summary

- No performance change of the part
- Adjusted resolution and maximum detectable illuminance as this was wrongly stated in the current appnote from 0.0036 lux/count and 120kLux to 0.0042 lux/count and 140 kLux, respectively
- Adjusted spectral response (ALS & white channel)
- Added information about integration time tolerance
- Renamed bits naming for readability purpose
- Added ID – register information
- Declared configuration bits as R / W
- Added examples and optimized handling instructions concerning the correction formula

© VISHAY INTERTECHNOLOGY, INC. ALL RIGHTS RESERVED.

chanhvinh.com

Page 1

Rev. 20-Sep-2019

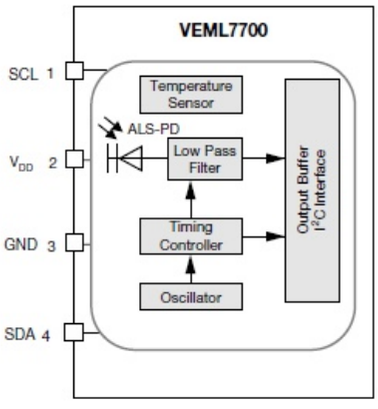

Fig. 1 - VEML7700 Block Diagram

Rev. 17-Jan-2024

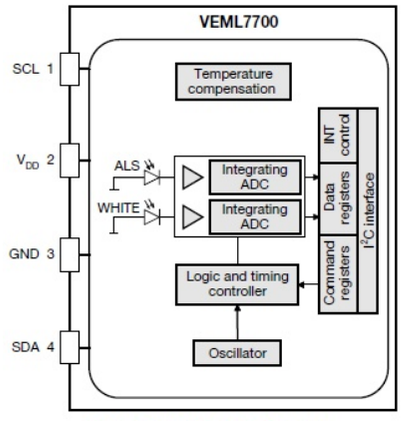

Fig. 1 - VEML7700 Block Diagram

© VISHAY INTERTECHNOLOGY, INC. ALL RIGHTS RESERVED.

Page 2

Rev. 20-Sep-2019

COMMAND REGISTER FORMAT				
COMMAND CODE	REGISTER NAME	BIT	FUNCTION / DESCRIPTION	R / W
00	ALS_CONF 0	15 : 0	ALS gain, integration time, interrupt, and shutdown	W
01	ALS_WH	15 : 8	ALS high threshold window setting (MSB)	W
		7 : 0	ALS high threshold window setting (LSB)	W
02	ALS_WL	15 : 8	ALS low threshold window setting (MSB)	W
		7 : 0	ALS low threshold window setting (LSB)	W
03	Power saving	15 : 0	Set (15 : 3) 0000 0000 0000 0b	
04	ALS	15 : 8	MSB 8 bits data of whole ALS 16 bits	R
		7 : 0	LSB 8 bits data of whole ALS 16 bits	R
05	WHITE	15 : 8	MSB 8 bits data of whole WHITE 16 bits	R
		7 : 0	LSB 8 bits data of whole WHITE 16 bits	R
06	ALS_INT	15 : 0	ALS INT trigger event	R

Rev. 17-Jan-2024

COMMAND REGISTER FORMAT				
COMMAND CODE	REGISTER NAME	BIT	FUNCTION / DESCRIPTION	R / W
00	ALS_CONF 0	15 : 0	ALS gain, integration time, interrupt, and shutdown	R / W
01	ALS_WH	15 : 8	ALS high threshold window setting (MSB)	R / W
		7 : 0	ALS high threshold window setting (LSB)	R / W
02	ALS_WL	15 : 8	ALS low threshold window setting (MSB)	R / W
		7 : 0	ALS low threshold window setting (LSB)	R / W
03	Power saving	15 : 0	Set (15 : 3) 0000 0000 0000 0b	R / W
04	ALS	15 : 8	MSB 8 bits data of whole ALS 16 bits	R
		7 : 0	LSB 8 bits data of whole ALS 16 bits	R
05	WHITE	15 : 8	MSB 8 bits data of whole WHITE 16 bits	R
		7 : 0	LSB 8 bits data of whole WHITE 16 bits	R
06	ALS_INT	15 : 0	ALS INT trigger event	R
07	ID	15 : 0	Device ID	R

© VISHAY INTERTECHNOLOGY, INC. ALL RIGHTS RESERVED.

chanhvinh.com

Page 4

Rev. 20-Sep-2019

Command Code ALS_IT

Command code: 00, bits 9 to 6

COMMAND REGISTER FORMAT			
REGISTER NAME	BIT	FUNCTION / DESCRIPTION	R / W
ALS_IT	9 : 6	ALS integration time setting 1100 = 25 ms 1000 = 50 ms 0000 = 100 ms 0001 = 200 ms 0010 = 400 ms 0011 = 800 ms	R / W

Remark: the standard integration time is 100 ms. If a very high resolution is needed, one may increase this integration time up to 800 ms. If faster measurement results are needed, it can be decreased down to 25 ms.

Rev. 17-Jan-2024

Command Code ALS_IT

Command code: 00, bits 9 to 6

COMMAND REGISTER FORMAT			
REGISTER NAME	BIT	FUNCTION / DESCRIPTION	R / W
ALS_IT	9 : 6	ALS integration time setting 1100 = 25 ms 1000 = 50 ms 0000 = 100 ms 0001 = 200 ms 0010 = 400 ms 0011 = 800 ms	R / W

Remark: the standard integration time is 100 ms. If a very high resolution is needed, one may increase this integration time up to 800 ms. If faster measurement results are needed, it can be decreased down to 25 ms. For the integration time a tolerance of ± 30 % can be assumed. This tolerance should also be considered during the read out of the measurement results.

© VISHAY INTERTECHNOLOGY, INC. ALL RIGHTS RESERVED.

VISHAY The DNA of tech.™

Page 5

Rev. 20-Sep-2019

RESOLUTION AND MAXIMUM DETECTION RANGE								
	GAIN 2	GAIN 1	GAIN 1/4	GAIN 1/8	GAIN 2	GAIN 1	GAIN 1/4	GAIN 1/8
IT (ms)	TYPICAL RESOLUTION				MAXIMUM POSSIBLE ILLUMINATION			
800	0.0036	0.0072	0.0288	0.0576	236	472	1887	3775
400	0.0072	0.0144	0.0576	0.1152	472	944	3775	7550
200	0.0144	0.0288	0.1152	0.2304	944	1887	7550	15 099
100	0.0288	0.0576	0.2304	0.4608	1887	3775	15 099	30 199
50	0.0576	0.1152	0.4608	0.9216	3775	7550	30 199	60 398
25	0.1152	0.2304	0.9216	1.8432	7550	15 099	60 398	120 796

Example:

If the 16-bit word of the ALS data shows: 0000 0101 1100 1000 = 1480 (dec.), the programmed ALS gain is 1/4, and the integration time is 100 ms. The corresponding lux level is:

light level [lx] = 1480 x 0.2304 = 341 lx

Rev. 17-Jan-2024

RESOLUTION AND MAXIMUM DETECTION RANGE								
	GAIN 2	GAIN 1	GAIN 1/4	GAIN 1/8	GAIN 2	GAIN 1	GAIN 1/4	GAIN 1/8
IT (ms)	TYPICAL RESOLUTION (lx / cnt)				MAXIMUM POSSIBLE ILLUMINATION (lx)			
800	0.0042	0.0084	0.0336	0.0672	275	550	2202	4404
400	0.0084	0.0168	0.0672	0.1344	550	1101	4404	8808
200	0.0168	0.0336	0.1344	0.2688	1101	2202	8808	17 616
100	0.0336	0.0672	0.2688	0.5376	2202	4404	17 616	35 232
50	0.0672	0.1344	0.5376	1.0752	4404	8808	35 232	70 463
25	0.1344	0.2688	1.0752	2.1504	8808	17 616	70 463	140 926

Note

- For illuminations > 1000 lx a correction formula needs to be applied. Please refer to the section "APPLICATION-DEPENDENT LUX CALCULATION" for further details on how this is done.

Example:

If the 16-bit word of the ALS data shows: 0001 0101 1100 1101 = 5581 (dec.), the programmed ALS gain is 1/4, and the integration time is 100 ms. The corresponding lux level is:

light level (uncorrected) = 5581 x 0.2688 = 1500 lx

Correcting the lux value with the help of the correction formula yields:

$a \times (1500\ lux)^4 + b \times (1500\ lux)^3 + c \times (1500\ lux)^2 + d \times (1500\ lux) = 1658\ lux$

With the polynomial coefficients:

$a = 6.0135^{-13}$
$b = -9.3924^{-9}$
$c = 8.1488^{-5}$
$d = 1.0023$

© VISHAY INTERTECHNOLOGY, INC. ALL RIGHTS RESERVED.

VISHAY The DNA of tech.™

chanhvinh.com

Page 5

Rev. 20-Sep-2019

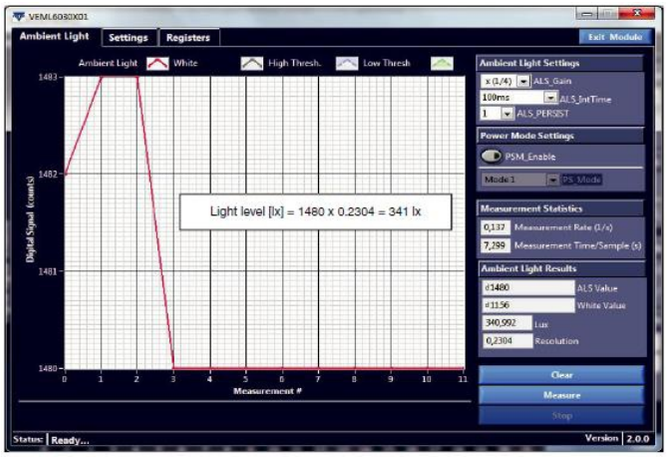

Rev. 17-Jan-2024

- Removed this figure because it was made with outdated sensitivity factors

© VISHAY INTERTECHNOLOGY, INC. ALL RIGHTS RESERVED.

Page 10 – corrected axis labels

Rev. 20-Sep-2019

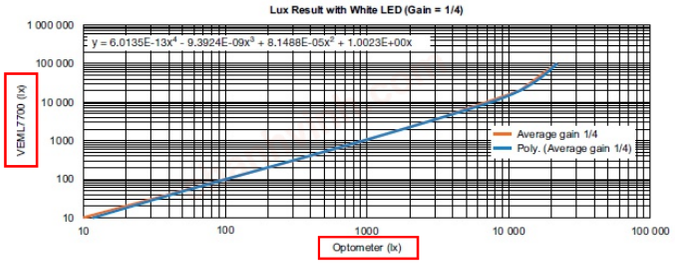

Rev. 17-Jan-2024

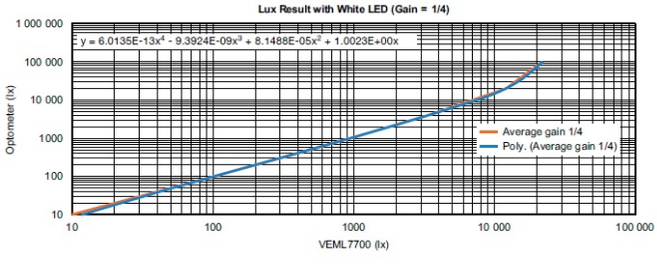

© VISHAY INTERTECHNOLOGY, INC. ALL RIGHTS RESERVED.

chanhvinh.com

Page 11

Rev. 20-Sep-2019

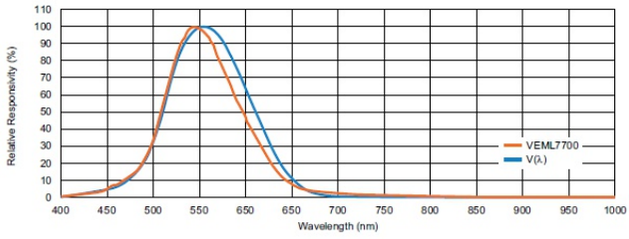

Fig. 12 - Spectral Response ALS Channel

Rev. 17-Jan-2024

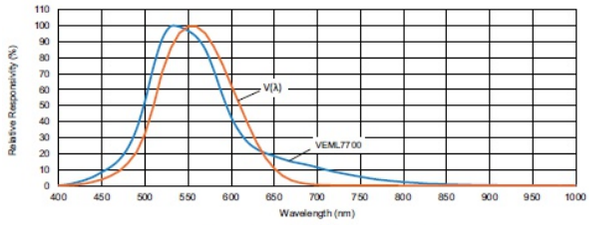

Fig. 11 - Spectral Response ALS Channel

© VISHAY INTERTECHNOLOGY, INC. ALL RIGHTS RESERVED.

Page 16

Rev. 20-Sep-2019

REFRESH TIME, I_{DD}, AND RESOLUTION RELATION

ALS_GAIN	PSM	ALS_IT	REFRESH TIME (ms)	I_{DD} (µA)	RESOLUTION (lx/bit)
01	00	0000	600	8	0.0288
01	01	0000	1100	5	0.0288
01	10	0000	2100	3	0.0288
01	11	0000	4100	2	0.0288
01	00	0001	700	13	0.0144
01	01	0001	1200	8	0.0144
01	10	0001	2200	5	0.0144
01	11	0001	4200	3	0.0144
01	00	0010	900	20	0.0072
01	01	0010	1400	13	0.0072
01	10	0010	2400	8	0.0072
01	11	0010	4400	5	0.0072
01	00	0011	1300	28	0.0036
01	01	0011	1800	20	0.0036
01	10	0011	2800	13	0.0036
01	11	0011	4800	8	0.0036

Rev. 17-Jan-2024

REFRESH TIME, I_{DD}, AND RESOLUTION RELATION

ALS_GAIN	PSM	ALS_IT (ms)	REFRESH TIME (ms)	I_{DD} (µA)	RESOLUTION (lx/bit)
x2	Mode 1	100	600	8	0.0336
x2	Mode 2	100	1100	5	0.0336
x2	Mode 3	100	2100	3	0.0336
x2	Mode 4	100	4100	2	0.0336
x2	Mode 1	200	700	13	0.0168
x2	Mode 2	200	1200	8	0.0168
x2	Mode 3	200	2200	5	0.0168
x2	Mode 4	200	4200	3	0.0168
x2	Mode 1	400	900	20	0.0084
x2	Mode 2	400	1400	13	0.0084
x2	Mode 3	400	2400	8	0.0084
x2	Mode 4	400	4400	5	0.0084
x2	Mode 1	800	1300	28	0.0042
x2	Mode 2	800	1800	20	0.0042
x2	Mode 3	800	2800	13	0.0042
x2	Mode 4	800	4800	8	0.0042

© VISHAY INTERTECHNOLOGY, INC. ALL RIGHTS RESERVED.