chanhvinh.com

High Sensitivity Long Distance Proximity and Ambient Light Sensor With I²C Interface



DESCRIPTION

VCNL4200 integrates a high sensitivity long distance proximity sensor (PS), ambient light sensor (ALS), and 940 nm IRED into one small package. It incorporates photodiodes, amplifiers, and analog to digital converting circuits into a single chip using a CMOS process. The 16-bit high resolution ALS offers excellent sensing capabilities with sufficient selections to fulfill most applications whether a dark or high transparency lens design. VCNL4200 offers individual programmable high and low threshold interrupt features for the best utilization of resources and power saving on the microcontroller. For the 12-bit / 16-bit proximity sensing function, VCNL4200 has a built-in intelligent cancellation scheme that eliminates background light issues. The persistence feature prevents false judgment of proximity sensing due to ambient light noise.

The adoption of the patented Filtron™ technology achieves the closest ambient light spectral sensitivity to real human eye responses. VCNL4200 provides excellent temperature compensation capability for keeping the output stable under changing temperature. ALS and PS functions are easily operated via the simple command format of I²C (SMBus compatible) interface protocol. Operating voltage ranges from 2.5 V to 3.6 V.

PIN DEFINITION

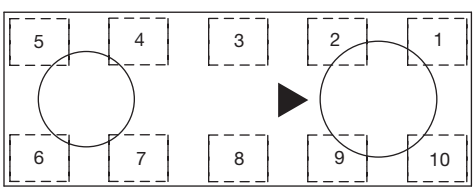

Top View

1	GND	6	LED+
2	LED_CATHODE	7	NC
3	V_{DD}	8	INT
4	NC	9	SDAT
5	LED-	10	SCLK

FEATURES

- Package type: surface-mount
- Dimensions (L x W x H in mm): 8.0 x 3.0 x 1.8
- Integrated modules: infrared emitter (IRED), ambient light sensor (ALS), proximity sensor (PS), and signal conditioning IC
- Operates ALS and PS in parallel structure
- Filtron™ technology adoption for robust background light cancellation
- Supports low transmittance (dark) lens design
- Temperature compensation: -40 °C to +85 °C
- Low power consumption I²C (SMBus compatible) interface
- Floor life: 168 h, MSL 3, according to J-STD-020
- Output type: I²C bus (ALS / PS)
- Operation voltage: 2.5 V to 3.6 V
- Material categorization: for definitions of compliance please see www.vishay.com/doc?99912

Pb-free
e4
RoHS COMPLIANT
HALOGEN FREE
GREEN (5-2008)

PROXIMITY FUNCTION

- Immunity to red glow (940 nm IRED)
- Intelligent background light cancellation
- Smart persistence scheme to reduce PS response time
- Proximity distance up to 1.5 m

AMBIENT LIGHT FUNCTION

- Fluorescent light flicker immunity
- Spectrum close to real human eye responses
- Selectable maximum detection range (197 / 393 / 786 / 1573) lux with highest sensitivity 0.003 lux/step

INTERRUPT

- Programmable interrupt function for ALS and PS with upper and lower thresholds
- Adjustable persistence to prevent false triggers for ALS and PS

APPLICATIONS

- Presence detection to activate displays in printers, copiers, and home appliances
- Collision detection in robots and toys
- Proximity sensing and lighting control in offices, corridors and public buildings
- Parking space availability in lots and garages
- Proximity detection in lavatory appliances

For technical questions, contact: sensorstechsupport@vishay.com
THIS DOCUMENT IS SUBJECT TO CHANGE WITHOUT NOTICE. THE PRODUCTS DESCRIBED HEREIN AND THIS DOCUMENT ARE SUBJECT TO SPECIFIC DISCLAIMERS, SET FORTH AT www.vishay.com/doc?91000

chanhvinh.com

PRODUCT SUMMARY

PART NUMBER	OPERATING RANGE (mm)	OPERATING VOLTAGE RANGE (V)	I²C BUS VOLTAGE RANGE (V)	IRED PULSE CURRENT (mA)	AMBIENT LIGHT RANGE (lx)	AMBIENT LIGHT RESOLUTION (lx)	OUTPUT CODE	ADC RESOLUTION PROXIMITY / AMBIENT LIGHT
VCNL4200	0 to 1500	2.5 to 3.6	1.8 to 3.6	800 (1)	0.003 to 1573	0.003	16 bit, I²C	12 bit / 16 bit

Note

(1) Maximum allowed current for VCNL4200 internal IRED

ORDERING INFORMATION

ORDERING CODE	PACKAGING	VOLUME (1)	PIN NUMBER	REMARKS
VCNL4200	Tape and reel	MOQ: 2500 pcs	10	8.0 mm x 3.0 mm x 1.8 mm

Note

(1) MOQ: minimum order quantity

ABSOLUTE MAXIMUM RATINGS (T_{amb} = 25 °C, unless otherwise specified)

PARAMETER	TEST CONDITION	SYMBOL	MIN.	MAX.	UNIT
Supply voltage		V_{DD}	-	5.0	V
Operation temperature range		T_{amb}	-40	+85	°C
Storage temperature range		T_{stg}	-40	+100	°C

RECOMMENDED OPERATING CONDITIONS (T_{amb} = 25 °C, unless otherwise specified)

PARAMETER	TEST CONDITION	SYMBOL	MIN.	MAX.	UNIT
Supply voltage		V_{DD}	2.5	3.6	V
Operation temperature range		T_{amb}	-40	+85	°C
I²C bus operating frequency		$f_{(I2CCLK)}$	10	400	kHz

PIN DESCRIPTIONS

PIN ASSIGNMENT	SYMBOL	TYPE	FUNCTION
1	GND	I	Ground
2	LED_CATHODE	I	IRED cathode connection
3	V_{DD}	I	Power supply input
4	NC	-	No connection
5	LED-	O	IRED cathode
6	LED+	I	IRED anode
7	NC	-	No connection
8	INT	O	Interrupt pin
9	SDAT	I / O (open drain)	I²C data bus data input / output
10	SCLK	I	I²C digital bus clock input

For technical questions, contact: sensorstechsupport@vishay.com
THIS DOCUMENT IS SUBJECT TO CHANGE WITHOUT NOTICE. THE PRODUCTS DESCRIBED HEREIN AND THIS DOCUMENT ARE SUBJECT TO SPECIFIC DISCLAIMERS, SET FORTH AT www.vishay.com/doc?91000

chanhvinh.com

BLOCK DIAGRAM

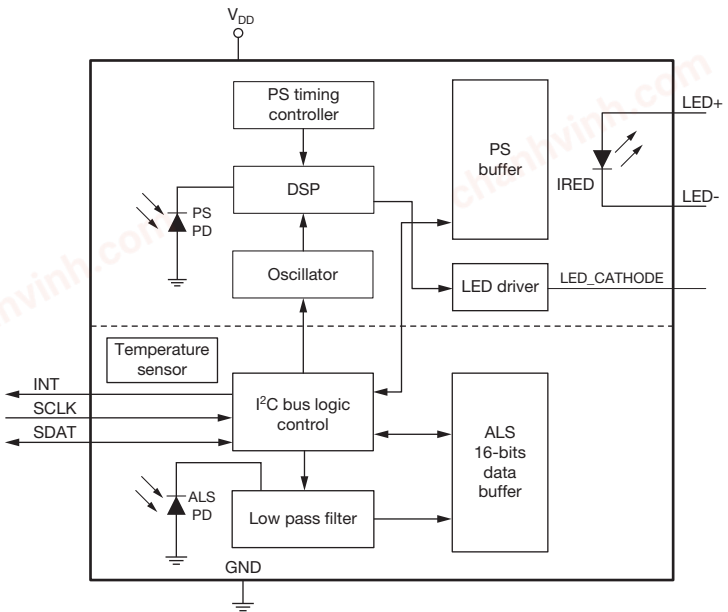

BASIC CHARACTERISTICS (T_{amb} = 25 °C, unless otherwise specified)							
PARAMETER		**TEST CONDITION**	**SYMBOL**	**MIN.**	**TYP.**	**MAX.**	**UNIT**
Supply voltage			V_{DD}	2.5	-	3.6	V
Supply voltage for IRED			V_{IRED}	3.8	-	5.5	V
Supply current		Excluded LED driving	I_{DD}	-	350	-	µA
Shutdown current		Light condition = dark, V_{DD} = 3.3 V	I_{DD} (SD)	-	0.2	-	µA
ALS shut down		ALS disable, PS enable	I_{ALSSD}	-	300	-	µA
PS shut down		ALS enable, PS disable	I_{PSSD}	-	213	-	µA
I^2C signal input	Logic high	V_{DD} = 3.3 V	V_{IH}	1.5	-	-	V
	Logic low		V_{IL}	-	-	0.8	
	Logic high	V_{DD} = 2.6 V	V_{IH}	1.4	-	-	V
	Logic low		V_{IL}	-	-	0.6	
Peak sensitivity wavelength of ALS			λ_p	-	550	-	nm
Peak sensitivity wavelength of PS			λ_{pps}	-	940	-	nm
Full ALS counts		16-bit resolution		-	-	65 535	steps
Full PS counts		12-bit / 16-bit resolution		-	-	4095 / 65 535	steps
Detectable intensity	Minimum	IT = 400 ms, V_{DD} = 3.3 V, 1 step (1)(2)		-	0.003	-	lx
	Maximum	IT = 50 ms, V_{DD} = 3.3 V, 65 535 steps (1)(2)		-	1573	-	
ALS dark offset		IT = 50 ms, V_{DD} = 3.3 V, normal sensitivity (1)		0	-	3	steps
Operating temperature range			T_{amb}	-40	-	+85	°C
IRED driving current		(3)		-	-	800	mA

Notes

(1) Light source: white LED

(2) Maximum detection range to ambient light can be determined by ALS refresh time adjustment. Refer to table 17 “ALS Resolution and Maximum Detection Range”

(3) Based on IRED on / off duty ratio = 1/160, 1/320, 1/640, and 1/1280. The circuitry should use an external MOSFET as shown with Fig.11. Please see also the Application Note “Designing the VCNL4200 into an Application” (www.vishay.com/doc?84327)

For technical questions, contact: sensorstechsupport@vishay.com

THIS DOCUMENT IS SUBJECT TO CHANGE WITHOUT NOTICE. THE PRODUCTS DESCRIBED HEREIN AND THIS DOCUMENT ARE SUBJECT TO SPECIFIC DISCLAIMERS, SET FORTH AT www.vishay.com/doc?91000

chanhvinh.com

I²C BUS TIMING CHARACTERISTICS (T_{amb} = 25 °C, unless otherwise specified)						
PARAMETER	**SYMBOL**	**STANDARD MODE**		**FAST MODE**		**UNIT**
		MIN.	**MAX.**	**MIN.**	**MAX.**	
Clock frequency	$f_{(SMBCLK)}$	10	100	10	400	kHz
Bus free time between start and stop condition	$t_{(BUF)}$	4.7	-	1.3	-	µs
Hold time after (repeated) start condition; after this period, the first clock is generated	$t_{(HDSTA)}$	4.0	-	0.6	-	µs
Repeated start condition setup time	$t_{(SUSTA)}$	4.7	-	0.6	-	µs
Stop condition setup time	$t_{(SUSTO)}$	4.0	-	0.6	-	µs
Data hold time	$t_{(HDDAT)}$		3450	-	900	ns
Data setup time	$t_{(SUDAT)}$	250	-	100	-	ns
I²C clock (SCK) low period	$t_{(LOW)}$	4.7	-	1.3	-	µs
I²C clock (SCK) high period	$t_{(HIGH)}$	4.0	-	0.6	-	µs
Clock / data fall time	$t_{(F)}$	-	300	-	300	ns
Clock / data rise time	$t_{(R)}$	-	1000	-	300	ns

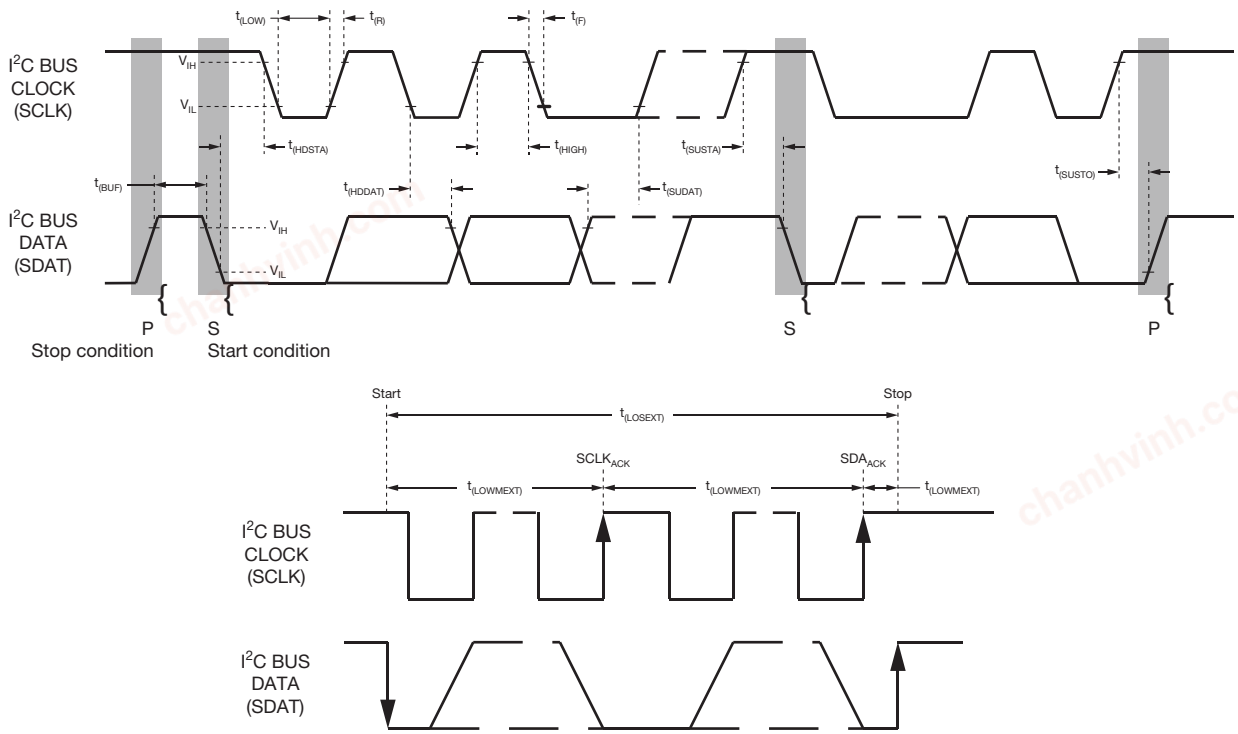

Fig. 1 - I²C Bus Timing Diagram

For technical questions, contact: sensorstechsupport@vishay.com
THIS DOCUMENT IS SUBJECT TO CHANGE WITHOUT NOTICE. THE PRODUCTS DESCRIBED HEREIN AND THIS DOCUMENT ARE SUBJECT TO SPECIFIC DISCLAIMERS, SET FORTH AT www.vishay.com/doc?91000

chanhvinh.com

PARAMETER TIMING INFORMATION

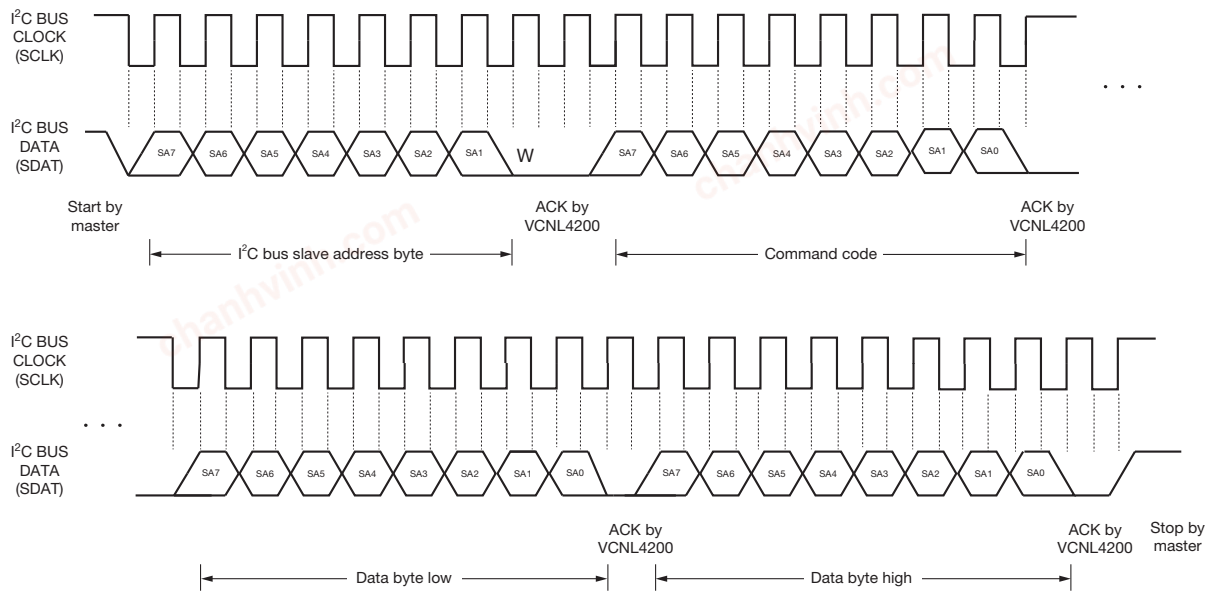

Fig. 2 - I²C Bus Timing for Sending Word Command Format

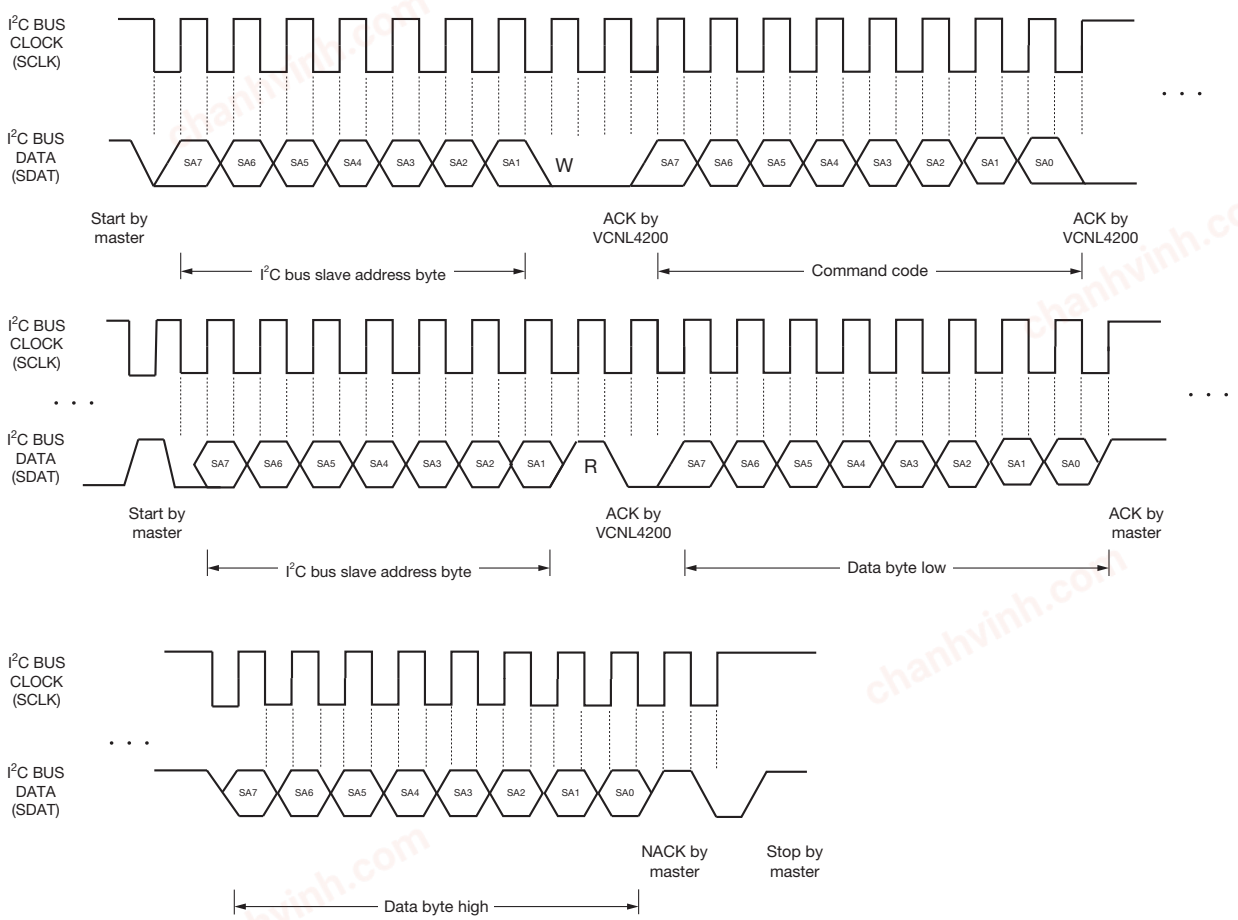

Fig. 3 - I²C Bus Timing for Receiving Word Command Format

For technical questions, contact: sensorstechsupport@vishay.com
THIS DOCUMENT IS SUBJECT TO CHANGE WITHOUT NOTICE. THE PRODUCTS DESCRIBED HEREIN AND THIS DOCUMENT ARE SUBJECT TO SPECIFIC DISCLAIMERS, SET FORTH AT www.vishay.com/doc?91000

chanhvinh.com

TYPICAL PERFORMANCE CHARACTERISTICS (T_{amb} = 25 °C, unless otherwise specified)

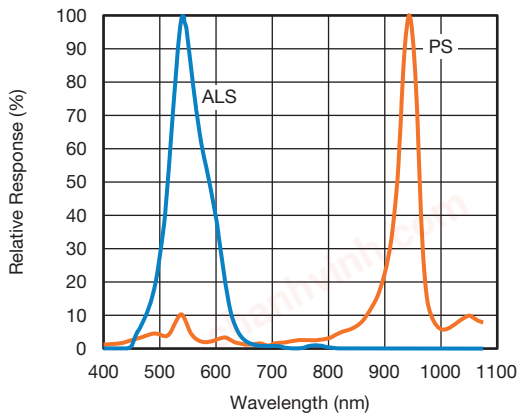

Fig. 4 - Normalized Spectral Response

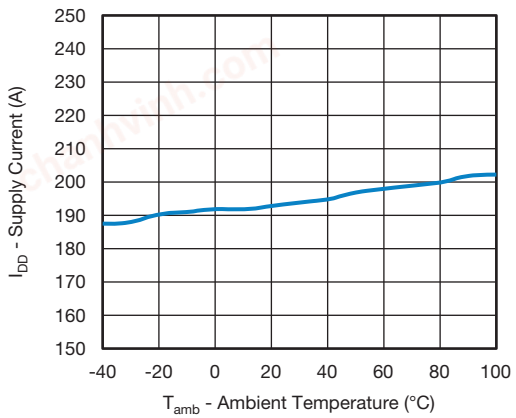

Fig. 7 - I_{DD} vs.Temperature

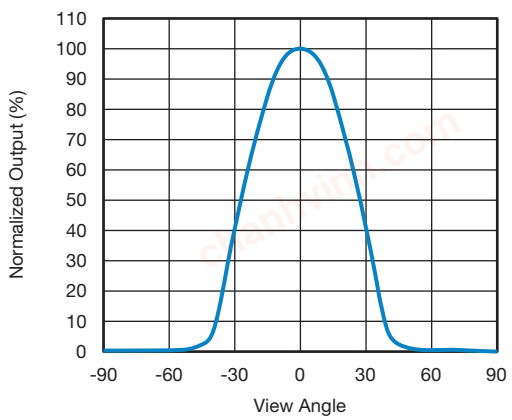

Fig. 5 - ALS Normalized Output vs. View Angle

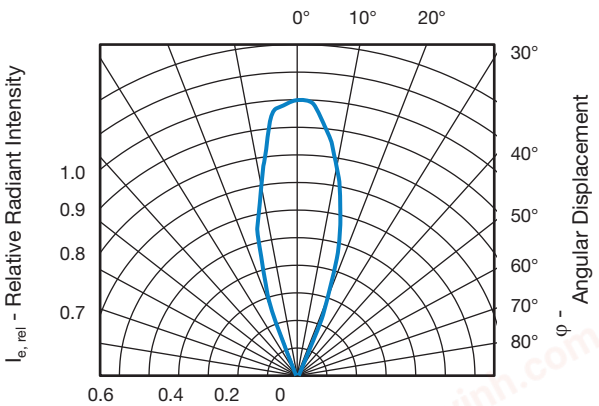

Fig. 8 - Relative Radiant Intensity vs. Angular Displacement

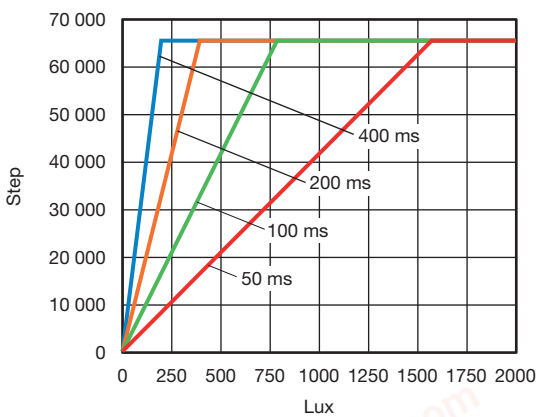

Fig. 6 - ALS Refresh Time vs. Maximum Detection Range

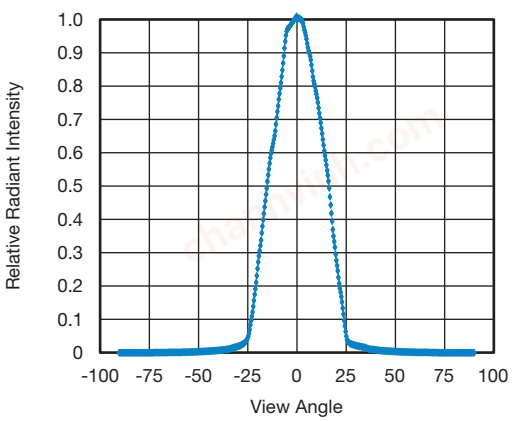

Fig. 9 - Relative Radiant Intensity vs. Angular Displacement (Cartesian view)

For technical questions, contact: sensorstechsupport@vishay.com
THIS DOCUMENT IS SUBJECT TO CHANGE WITHOUT NOTICE. THE PRODUCTS DESCRIBED HEREIN AND THIS DOCUMENT ARE SUBJECT TO SPECIFIC DISCLAIMERS, SET FORTH AT www.vishay.com/doc?91000

chanhvinh.com

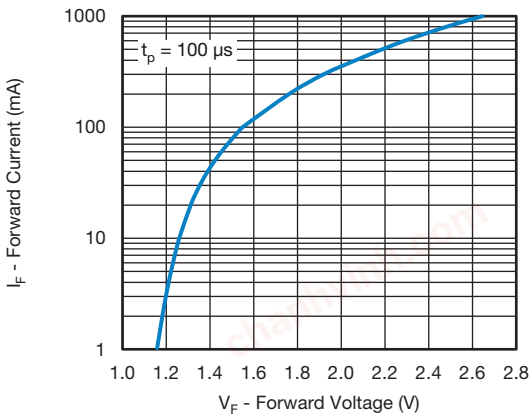

Fig. 10 - Forward Current vs. Forward Voltage

APPLICATION INFORMATION

Pin Connection with the Host

VCNL4200 is a cost effective solution of a long distance proximity sensor with I²C interface. The standard serial digital interface easily accesses “light intensity” by using simple calculations.

Application circuitry below shows the added MOSFET which is driven by the ASIC’s pin 2. A 5 kΩ pull-up resistor needs to be added here. The R_{LED} defines the current through the IRED. A small 0.1 µF is sufficient at V_{DD} for power supply noise rejection, but a 2.2 µF should be placed at V_{IRED} to provide the energy for the IRED.

For the I²C bus design, the pull-up voltage refers to the I/O specification of the baseband due to its “open drain” design. The pull-high resistors for the I²C bus lines are recommended to be ≥ 2.2 kΩ.

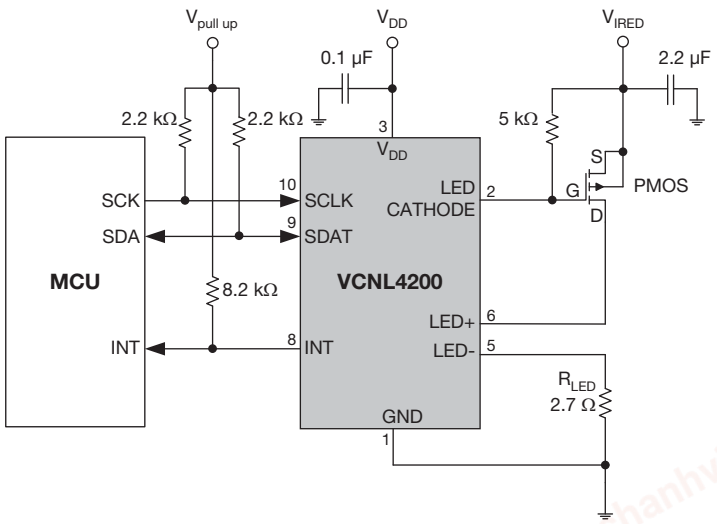

Fig. 11 - Application Diagram

Notes

- V_{DD} range: 2.5 V to 3.6 V and V_{IRED} is recommended 5.0 V
- Power path of V_{DD} and V_{IRED} should be routed separately up to stable power source
- The R_{LED} resister value should be evaluated within ready-made application and the current through VCNL4200-internal IRED should not exceed 800 mA

For technical questions, contact: sensorstechsupport@vishay.com
THIS DOCUMENT IS SUBJECT TO CHANGE WITHOUT NOTICE. THE PRODUCTS DESCRIBED HEREIN AND THIS DOCUMENT ARE SUBJECT TO SPECIFIC DISCLAIMERS, SET FORTH AT www.vishay.com/doc?91000

chanhvinh.com

Digital Interface

VCNL4200 applies single 7-bit slave address 0x51 (HEX) following I²C protocol. All operations can be controlled by the command register. The simple command structure helps users easily program the operation setting and latch the light data from VCNL4200. As fig. 12 shows, VCNL4200's I²C command format is simple for read and write operations between VCNL4200 and the host. The white sections indicate host activity and the gray sections indicate VCNL4200's acknowledgement of the host access activity. Write word and read word protocols are suitable for accessing registers particularly for 16-bit ALS data and 12-bit / 16-bit PS data. Interrupt can be cleared by reading data out from register: INT_Flag.

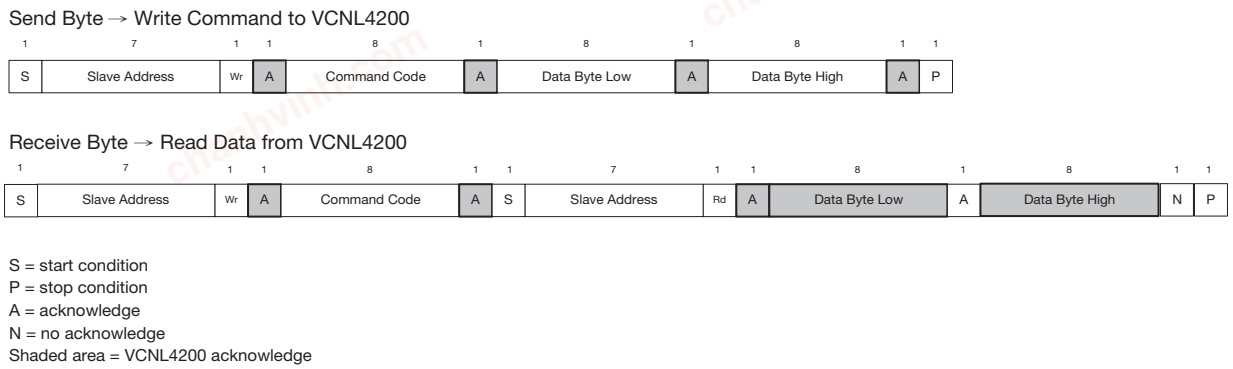

Fig. 12 - Command Protocol Format

Function Description

VCNL4200 applies a 16-bit high resolution ALS that provides the best ambient light sensing capability up to 0.003 lx/step which works well under a low transmittance lens design (dark lens). Please also note from Fig. 5, that the viewing angle of the ALS is very small, so accurate values will only be measured, if the light source is directly above the sensor. A flexible interrupt function of ALS (register: ALS_CONF) is also supported. The INT signal will not be asserted by VCNL4200 if the ALS value is not over high INT threshold window level, or lower than low INT threshold window level of ALS. As long as the ALS INT is asserted, the host can read the data from VCNL4200.

For proximity sensor function, VCNL4200 supports different kinds of mechanical design to achieve the best proximity detection performance for any color object. The basic PS function settings, such as duty ratio, integration time, interrupt, and PS enable / disable and persistence, are handled by the register: PS_CONF1. Duty ratio controls the PS response time. Integration time represents the duration for which the detector is sensitive to be reflected light. The interrupt is asserted when the PS detection goes over the high threshold level setting (register: PS_THDH) or lower than low threshold (register: PS_THDL). If the interrupt function is enabled, the host reads the PS output data from VCNL4200 that saves host from periodically reading PS data. Additionaly INT flag (register: INT_Flag) indicates the behavior of INT triggered under different conditions. PS persistence (PS_PERS) sets up the PS INT asserted conditions as long as the PS output value continually exceeds the threshold level. PS_MS enables the interrupt logic mode, where the interrupt is triggered by surpassing the high threshold and is automatically reset when the signal falls below the low threshold.

For technical questions, contact: sensorstechsupport@vishay.com
THIS DOCUMENT IS SUBJECT TO CHANGE WITHOUT NOTICE. THE PRODUCTS DESCRIBED HEREIN AND THIS DOCUMENT ARE SUBJECT TO SPECIFIC DISCLAIMERS, SET FORTH AT www.vishay.com/doc?91000

chanhvinh.com

Descriptions of each of these settings are shown in table 1.

TABLE 1 - COMMAND CODE AND REGISTER DESCRIPTION

COMMAND CODE	REGISTER NAME	R / W	DEFAULT VALUE	FUNCTION DESCRIPTION
00H_L	ALS_CONF	R / W	01H	ALS integration time, persistence, interrupt, and function enable / disable
00H_H	Reserved	R / W	00H	Reserved
01H_L	ALS_THDH_L	R / W	00H	ALS high interrupt threshold, LSB
01H_H	ALS_THDH_H	R / W	00H	ALS high interrupt threshold, MSB
02H_L	ALS_THDL_L	R / W	00H	ALS low interrupt threshold, LSB
02H_H	ALS_THDL_H	R / W	00H	ALS low interrupt threshold, MSB
03H_L	PS_CONF1	R / W	01H	PS duty ratio, integration time, persistence, and PS enable / disable
03H_H	PS_CONF2	R / W	00H	PS_HD, PS interrupt trigger method
04H_L	PS_CONF3	R / W	00H	PS multi pulse, active force mode, enable sunlight cancellation
04H_H	PS_MS	R / W	00H	PS mode selection, sunlight capability, sunlight protection mode
05H_L	PS_CANC_L	R / W	00H	PS cancellation level setting, LSB
05H_H	PS_CANC_H	R / W	00H	PS cancellation level setting, MSB
06H_L	PS_THDL_L	R / W	00H	PS low interrupt threshold setting, LSB
06H_H	PS_THDL_H	R / W	00H	PS low interrupt threshold setting, MSB
07H_L	PS_THDH_L	R / W	00H	PS high interrupt threshold setting, LSB
07H_H	PS_THDH_H	R / W	00H	PS high interrupt threshold setting, MSB
08H_L	PS_Data_L	R	00H	PS LSB output data
08H_H	PS_Data_H	R	00H	PS MSB output data
09H_L	ALS_Data_L	R	00H	ALS LSB output data
09H_H	ALS_Data_H	R	00H	ALS MSB output data
0AH_L	White_Data_L	R	00H	White LSB output data
0AH_H	White_Data_H	R	00H	White MSB output data
0BH_L	Reserved	R	00H	Reserved
0BH_H	Reserved	R	00H	Reserved
0CH_L	Reserved	R	00H	Reserved
0CH_H	Reserved	R	00H	Reserved
0DH_L	Reserved	R	00H	Reserved
0DH_H	INT_Flag	R	00H	ALS, PS interrupt flags
0EH_L	ID_L	R	58H	Device ID LSB
0EH_H	ID_H	R	10H	Device ID MSB

For technical questions, contact: sensorstechsupport@vishay.com
THIS DOCUMENT IS SUBJECT TO CHANGE WITHOUT NOTICE. THE PRODUCTS DESCRIBED HEREIN AND THIS DOCUMENT ARE SUBJECT TO SPECIFIC DISCLAIMERS, SET FORTH AT www.vishay.com/doc?91000

chanhvinh.com

Command Register Format

VCNL4200 provides an 8-bit command register for ALS and PS controlling independently. The description of each command format is shown in following tables.

TABLE 2 - REGISTER: ALS_CONF DESCRIPTION

REGISTER NAME		COMMAND CODE: 0xH_L (0xH DATA BYTE LOW) OR 0xH_H (0xH DATA BYTE HIGH)							
Command	Bit	7	6	5	4	3	2	1	0
ALS_CONF		**COMMAND CODE: 00H_L (00H DATA BYTE LOW)**							
Command	Bit	Description							
ALS_IT	7 : 6	(0 : 0) = 50 ms; (0 : 1) = 100 ms; (1 : 0) = 200 ms; (1 : 1) = 400 ms ALS integration time setting, longer integration time has higher sensitivity							
ALS_INT_SWITCH	5	ALS interrupt switch, 0 = ALS channel interrupt, 1 = white channel interrupt							
Reserved	4	Default = 0, reserved							
ALS_PERS	3 : 2	(0 : 0) = 1, (0 : 1) = 2, (1 : 0) = 4, (1 : 1) = 8 ALS interrupt persistence setting							
ALS_INT_EN	1	0 = ALS interrupt disable, 1 = ALS interrupt enable							
ALS_SD	0	0 = ALS power on, 1 = ALS shut down							

TABLE 3 - REGISTER: RESERVE COMMAND DESCRIPTION

Reserved		COMMAND CODE: 00H_H (00H DATA BYTE HIGH)
Command	Bit	Description
Reserved	7 : 0	Default = 00H

TABLE 4 - REGISTER ALS_THDH_L AND ALS_THDH_H DESCRIPTION

ALS_THDH_L ALS_THDH_H		COMMAND CODE: 01H_L (01H DATA BYTE LOW) COMMAND CODE: 01H_H (01H DATA BYTE HIGH)
Register	Bit	Description
ALS_THDH_L	7 : 0	00H to FFH, ALS high interrupt threshold, LSB
ALS_THDH_H	7 : 0	00H to FFH, ALS high interrupt threshold, MSB

TABLE 5 - REGISTER: ALS_THDL_L AND ALS_THDL_H DESCRIPTION

ALS_THDL_L ALS_THDL_H		COMMAND CODE: 02H_L (02H DATA BYTE LOW) COMMAND CODE: 02H_H (02H DATA BYTE HIGH)
Register	Bit	Description
ALS_THDL_L	7 : 0	00H to FFH, ALS low interrupt threshold, LSB
ALS_THDL_H	7 : 0	00H to FFH, ALS low interrupt threshold, MSB

TABLE 6 - REGISTER: PS_CONF1 DESCRIPTION

PS_CONF1		COMMAND CODE: 03H_L (03H DATA BYTE LOW)
Command	Bit	Description
PS_Duty	7 : 6	(0 : 0) = 1/160, (0 : 1) = 1/320, (1 : 0) = 1/640, (1 : 1) = 1/1280 PS IRED on / off duty ratio setting
PS_PERS	5 : 4	(0 : 0) = 1, (0 : 1) = 2, (1 : 0) = 3, (1 : 1) = 4 PS interrupt persistence setting
PS_ IT	3 : 1	(0 : 0 : 0) = 1T, (0 : 0 : 1) = 1.5T, (0 : 1 : 0) = 2T, (0 : 1 : 1) = 4T, (1 : 0 : 0) = 8T, (1 : 0 : 1) = 9T, (1 : 1 : 0) = reserved, (1 : 1 : 1) = reserved
PS_SD	0	0 = PS power on, 1 = PS shut down

For technical questions, contact: sensorstechsupport@vishay.com
THIS DOCUMENT IS SUBJECT TO CHANGE WITHOUT NOTICE. THE PRODUCTS DESCRIBED HEREIN AND THIS DOCUMENT ARE SUBJECT TO SPECIFIC DISCLAIMERS, SET FORTH AT www.vishay.com/doc?91000

chanhvinh.com

TABLE 7 - REGISTER: PS_CONF2 DESCRIPTION		
PS_CONF2		**COMMAND CODE: 03H_H (03H DATA BYTE HIGH)**
Command	Bit	Description
Reserved	7 : 4	Reserved
PS_HD	3	0 = PS output is 12 bits, 1 = PS output is 16 bits
Reserved	2	Reserved
PS_INT	1 : 0	Proximity interrupt configuration (0 : 0) = interrupt disable, (0 : 1) = trigger by closing, (1 : 0) = trigger by away, (1 : 1) = trigger by closing and away

TABLE 8 - REGISTER: PS_CONF3 DESCRIPTION		
PS_CONF3		**COMMAND CODE: 04H_L (04H DATA BYTE LOW)**
Command	Bit	Description
Reserved	7	Default = 0, reserved
PS_MPS	6 : 5	Proximity multi pulse numbers (0 : 0) = 1, (0 : 1) = 2, (1 : 0) = 4, (1 : 1) = 8 multi pulses
PS_SMART_PERS	4	Proximity sensor smart persistence 0 = disable; 1 = enable
PS_AF	3	0 = active force mode disable (normal mode), 1 = active force mode enable
PS_TRIG	2	0 = no PS active force mode trigger, 1 = trigger one time cycle VCNL4200 output one cycle data every time host writes in “1” to sensor. The state returns to “0” automatically.
PS_SC_ADV	1	0 = typical sunlight immunity; 1 = 2 x typical sunlight immunity
PS_SC_EN	0	PS sunlight cancel enable setting, 1 = sunlight cancellation function enable

TABLE 9 - REGISTER: PS_MS DESCRIPTION		
Reserved		**COMMAND CODE: 04H_H (04H DATA BYTE HIGH)**
Command	Bit	Description
Reserved	7 : 6	Default = 0, reserved
PS_MS	5	Proximity operation mode 0 = proximity normal operation with interrupt function, 1 = proximity detection logic output mode enable
PS_SP	4	0 = typical sunlight capability, 1 = 1.5 x typical sunlight capability
PS_SPO	3	0 = output is 00h in sunlight protect mode, 1 = output is FFh in sunlight protect mode
LED_I	2 : 0	(0 : 0 : 0) = 50 mA, (0 : 0 : 1) = 75 mA, (0 : 1 : 0) = 100 mA, (0 : 1 : 1) = 120 mA, (1 : 0 : 0) = 140 mA, (1 : 0 : 1) = 160 mA, (1 : 1 : 0) = 180 mA, (1 : 1 : 1) = 200 mA

TABLE 10 - REGISTER: CANC_L AND CANC_H DESCRIPTION		
Reserved		**COMMAND CODE: 05H_L (05H DATA BYTE LOW)**
Register	Bit	Description
PS_CANC_L	7 : 0	00H to FFH, PS cancellation level setting, LSB
PS_CANC_H	7 : 0	00H to FFH, PS cancellation level setting, MSB

TABLE 11 - REGISTER: PS_THDL_L AND PS_THDL_H DESCRIPTION		
PS_THDL_L PS_THDL_H		**COMMAND CODE: 06H_L (06H DATA BYTE LOW) COMMAND CODE: 06H_H (06H DATA BYTE HIGH)**
Register	Bit	Description
PS_THDL_L	7 : 0	00H to FFH, PS low interrupt threshold setting, LSB
PS_THDL_H	7 : 0	00H to FFH, PS low interrupt threshold setting, MSB

For technical questions, contact: sensorstechsupport@vishay.com
THIS DOCUMENT IS SUBJECT TO CHANGE WITHOUT NOTICE. THE PRODUCTS DESCRIBED HEREIN AND THIS DOCUMENT ARE SUBJECT TO SPECIFIC DISCLAIMERS, SET FORTH AT www.vishay.com/doc?91000

chanhvinh.com

TABLE 12 - REGISTER: PS_THDH_L AND PS_THDH_H DESCRIPTION		
PS_THDH_L PS_THDH_H		**COMMAND CODE: 07H_L (07H DATA BYTE LOW) COMMAND CODE: 07H_H (07H DATA BYTE HIGH)**
Register	Bit	Description
PS_THDH_L	7 : 0	00H to FFH, PS high interrupt threshold setting, LSB
PS_THDH_H	7 : 0	00H to FFH, PS high interrupt threshold setting, MSB

TABLE 13 - READ OUT REGISTER DESCRIPTION			
REGISTER	**COMMAND CODE**	**BIT**	**DESCRIPTION**
PS_Data_L	08H_L (08H data byte low)	7 : 0	00H to FFH, PS LSB output data
PS_Data_H	08H_H (08H data byte high)	7 : 0	00H to FFH, PS MSB output data
ALS_Data_L	09H_L (09H data byte low)	7 : 0	00H to FFH, ALS LSB output data
ALS_Data_H	09H_H (09H data byte high)	7 : 0	00H to FFH, ALS MSB output data
White_Data_L	0AH_L (0AH data byte low)	7 : 0	00H to FFH, white LSB output data
White_Data_H	0AH_H (0AH data byte high)	7 : 0	00H to FFH, white MSB output data
Reserved	0BH_L (0BH data byte low)	7 : 0	Default = 00H
Reserved	0BH_H (0BH data byte low)	7 : 0	Default = 00H
Reserved	0CH_L (0CH data byte low)	7 : 0	Default = 00H
Reserved	0CH_H (0CH data byte low)	7 : 0	Default = 00H
Reserved	0DH_L (0DH data byte low)	7 : 0	Default = 00H
INT_Flag	0DH_H (0DH data byte high)	7 6 5 4 3 2 1 0	PS_UPFLAG PS code saturation flag PS_SPFLAG PS enter sunlight protection flag ALS_IF_L, ALS crossing low THD INT trigger event ALS_IF_H, ALS crossing high THD INT trigger event Default = 0, reserved Default = 0, reserved PS_IF_CLOSE, PS rise above PS_THDH INT trigger event PS_IF_AWAY, PS drop below PS_THDL INT trigger event
ID_L	0x0EH_L (0x0EH data byte low)	7 : 0	58H for MP version sample, device ID LSB byte
ID_H	0x0EH_H (0x0EH data byte high)	7 : 6 5 : 4 3 : 0	(0 : 0) (0 : 1) slave address = 0x51 (7-bit) Version code (0 : 0 : 0 : 0) = ES1, device ID MSB byte

Adjustable Sampling Time

VCNL4200's embedded LED driver drives the external IRED with the "LED_CATHODE" pin by a pulsed duty ratio. The IRED on / off duty ratio can be programmable by I^2C command at register: PS_Duty is related to the current consumption and PS response time. The higher the duty ratio selected, the faster response time achieved with higher power consumption. Please see also the application note: "Designing VCNL4200 Into an Application".

For technical questions, contact: sensorstechsupport@vishay.com
THIS DOCUMENT IS SUBJECT TO CHANGE WITHOUT NOTICE. THE PRODUCTS DESCRIBED HEREIN AND THIS DOCUMENT ARE SUBJECT TO SPECIFIC DISCLAIMERS, SET FORTH AT www.vishay.com/doc?91000

chanhvinh.com

Threshold Window Setting

- ALS Threshold Window Setting (Applying ALS INT)

  Register: ALS_THDH_L and ALS_THDH_H define 16-bit ALS high threshold data for LSB byte and MSB byte. Register: ALS_THDL_L and ALS_THDL_H define 16-bit ALS low threshold data for LSB byte and MSB byte. As long as ALS INT function is enabled, INT will be asserted once the ALS data exceeds ALS_THDH or goes below ALS_THDL. To easily define the threshold range, multiply the value of the resolution (lx/step) by the threshold level (refer table 17)

TABLE 14 - ALS RESOLUTION AND MAXIMUM DETECTION RANGE

ALS_IT		SENSITIVITY (lx/step)	MAXIMUM DETECTION RANGE (lx)
ALS_IT (7 : 6)	INTEGRATION TIME		
(0, 0)	50 ms	0.024	1573
(0, 1)	100 ms	0.012	786
(1, 0)	200 ms	0.006	393
(1, 1)	400 ms	0.003	197

- ALS Persistence

  The ALS INT is asserted as long as the ALS value is higher or lower than the threshold window when ALS_PERS (1 / 2 / 4 / 8 times) is set to one time. If ALS_PERS is set to four times, then the ALS INT will not be asserted if the ALS value is not over (or lower) than the threshold window for four continued refresh times (integration time)

- Programmable PS Threshold

  VCNL4200 provides both high and low thresholds 8-bit data setting for proximity sensor. (register: PS_THDL, PS_THDH) that fulfills different mechanical designs with the best proximity detection capability for any kind of objects

- PS Persistence

  The PS persistence function (PS_PERS 1 / 2 / 3 / 4) helps to avoid false trigger of the PS INT. For example, if PS_PERS = 3 times, the PS INT will not be asserted unless the PS value is greater than the PS threshold (PS1_THDH) value for three periods of time continuously

Data Access

All VCNL4200 command registers are readable. To access 16-bit high resolution ALS output data, it is suitable to use read word protocol to read out data by just one command at register: ALS_Data_L and ALS_Data_H. To represent the 16-bit data of ALS, it has to apply two bytes. One byte is for LSB, and the other byte is for MSB as shown in table 18. In terms of reading out 8-bit PS data, host just need to access register: PS_Data.

TABLE 15 - 16-BIT ALS DATA FORMAT

	VCNL4200															
Bit	15	14	13	12	11	10	9	8	7	6	5	4	3	2	1	0
Register	ALS_Data_H								ALS_Data_L							

Interrupt (INT)

VCNL4200 has ALS and PS interrupt feature operated by a single pin “INT”. The purpose of the interrupt feature is to actively inform the host once INT has been asserted. With the interrupt function applied, the host does not need to constantly poll data from the sensor, but to only read data from the sensor when receiving interrupt request from the sensor. As long as the host enables ALS interrupt (register: ALS_INT_EN) or PS interrupt (register: PS_INT) function, the level of INT pin (pin 8) is able to be pulled low once INT asserted. All of registers are accessible even INT is asserted.

ALS INT asserted when ALS value crosses over the value set by register: ALS_THDH or is lower than the value set by register: ALS_THDL.

PS INT asserted when PS value crosses over the value set by register: PS_THDH or is lower than the value set by register: PS_THDL.

Interrupt Flag

Register: INT_Flag represents all of interrupt trigger status for ALS and PS. Any flag value changes from “0” to “1” state, the level of INT pin will be pulled low. As long as host reads INT_Flag data, the bit will change from “1” state to “0” state after reading out. The INT level will be returned to high afterwards.

For technical questions, contact: sensorstechsupport@vishay.com
THIS DOCUMENT IS SUBJECT TO CHANGE WITHOUT NOTICE. THE PRODUCTS DESCRIBED HEREIN AND THIS DOCUMENT ARE SUBJECT TO SPECIFIC DISCLAIMERS, SET FORTH AT www.vishay.com/doc?91000

chanhvinh.com

PROXIMITY DETECTION LOGIC OUTPUT MODE

VCNL4200 provides a proximity detection logic output mode that uses INT pin as a proximity detection logic high / low output (register: PS_MS). When this mode is selected, the PS output (INT/P_{OUT}) is pulled low when an object is close to being detected and returned to level high when the object moves away. Register: PS_THDH / PS_THDL defines how sensitive PS detection is.

One thing to be noted is that whenever proximity detection logic mode applied, INT pin is only used as a logic high / low output. If host would like to use ALS with INT function, register: PS_MS has to be selected to normal operation mode (PS_MS = 0). Meanwhile, host has to simulate the GPIO pin as an INT pin function. If not, host needs to periodically read the state of INT at this GPIO pin.

PROXIMITY DETECTION HYSTERESIS

A PS detection hysteresis is important to keep the PS state in a certain range of detection distance. For example, PS INT asserts when PS value over PS_THDH. Host switches on panel backlight and then clears INT. When PS value is less than PS_THDL, host switches off panel backlight. Any PS value lower than PS_THDL PS INT will not be asserted. Host keeps the same state.

PACKAGE INFORMATION in millimeters

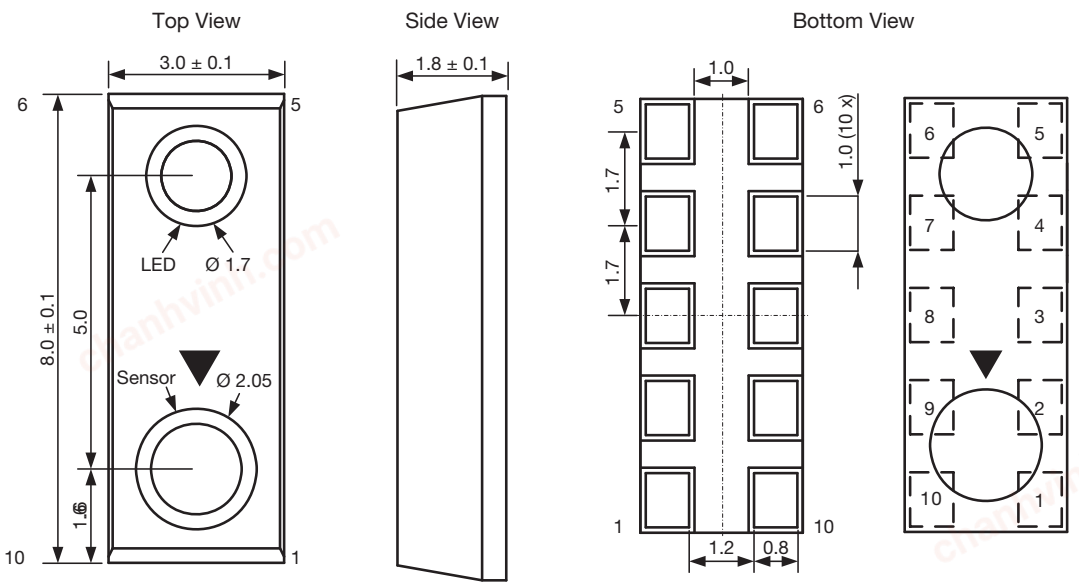

For Reflow Soldering (PCB Footprint)

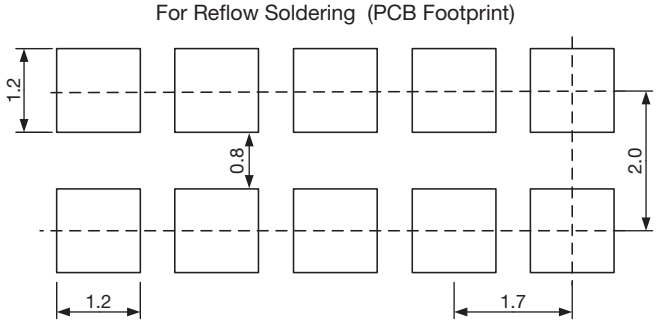

1	GND	6	LED+
2	LED_CATHODE	7	NC
3	VDD	8	INT
4	NC	9	SDAT
5	LED-	10	SCLK

Fig. 13 - VCNL4200 Package Dimensions

For technical questions, contact: sensorstechsupport@vishay.com
THIS DOCUMENT IS SUBJECT TO CHANGE WITHOUT NOTICE. THE PRODUCTS DESCRIBED HEREIN AND THIS DOCUMENT ARE SUBJECT TO SPECIFIC DISCLAIMERS, SET FORTH AT www.vishay.com/doc?91000

chanhvinh.com

APPLICATION CIRCUIT BLOCK REFERENCE

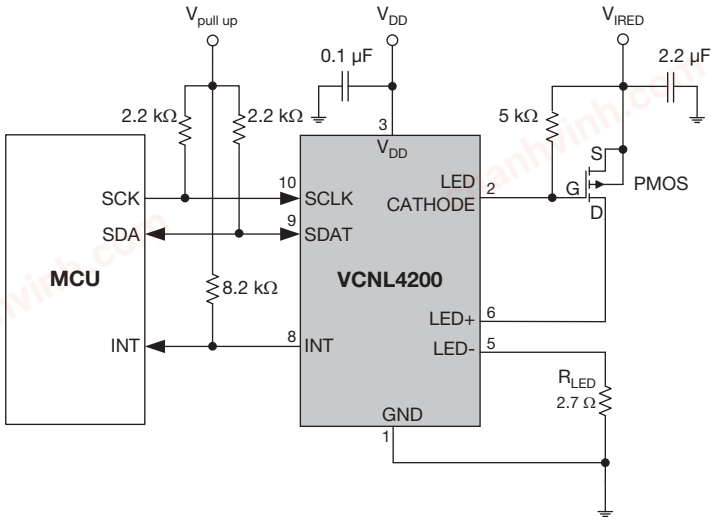

Fig. 14 - VCNL4200 Application Circuit

Notes

- V_{DD} range: 2.5 V to 3.6 V and V_{IRED} is recommended 5.0 V
- Power path of V_{DD} and V_{IRED} should be well separated and supply source for V_IRED should be stable enough for the high peak current
- The R_{LED} resistor value is reference for test stage, it should be adjusted again for the product usage basing on the power and the lens final design
- The FET may be any small device, e.g. a Si2301

RECOMMENDED STORAGE AND REBAKING CONDITIONS				
PARAMETER	**CONDITIONS**	**MIN.**	**MAX.**	**UNIT**
Storage temperature		5	50	°C
Relative humidity		-	60	%
Open time		-	168	h
Total time	From the date code on the aluminized envelope (unopened)	-	12	months
Rebaking	Tape and reel: 60 °C	-	22	h
	Tube: 60 °C	-	22	h

For technical questions, contact: sensorstechsupport@vishay.com
THIS DOCUMENT IS SUBJECT TO CHANGE WITHOUT NOTICE. THE PRODUCTS DESCRIBED HEREIN AND THIS DOCUMENT ARE SUBJECT TO SPECIFIC DISCLAIMERS, SET FORTH AT www.vishay.com/doc?91000

chanhvinh.com

RECOMMENDED INFRARED REFLOW

Soldering conditions which are based on J-STD-020 C.

IR REFLOW PROFILE CONDITION			
PARAMETER	**CONDITIONS**	**TEMPERATURE**	**TIME**
Peak temperature		255 °C + 0 °C / - 5 °C (max.: 260 °C)	10 s
Preheat temperature range and timing		150 °C to 200 °C	60 s to 180 s
Timing within 5 °C to peak temperature			10 s to 30 s
Timing maintained above temperature / time		217 °C	60 s to 150 s
Timing from 25 °C to peak temperature			8 min (max.)
Ramp-up rate		3 °C/s (max.)	
Ramp-down rate		6 °C/s (max.)	

Recommend Normal Solder Reflow is 235 °C to 255 °C.

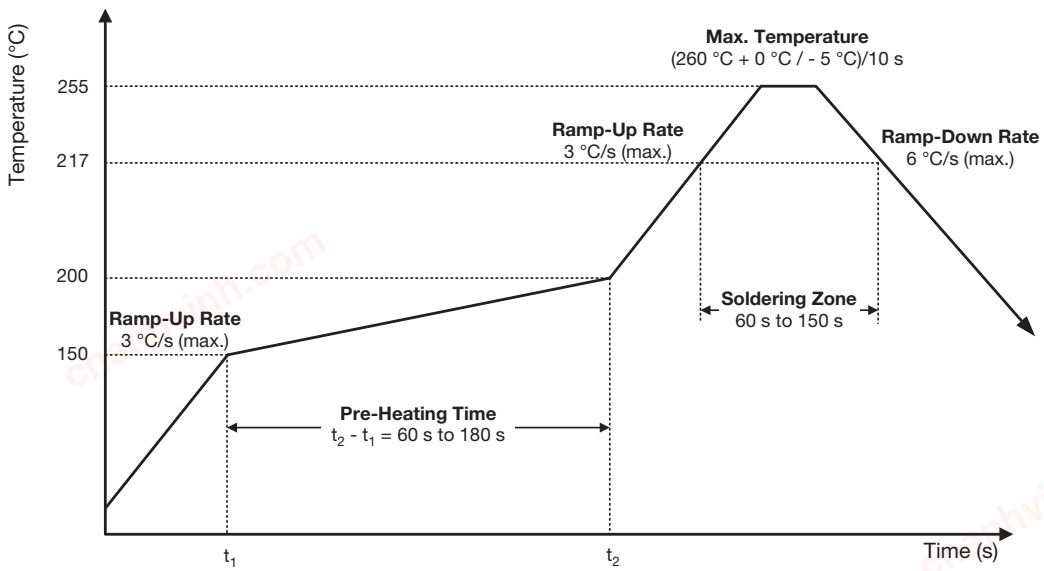

Fig. 15 - VCNL4200 Solder Reflow Profile Chart

RECOMMENDED IRON TIP SOLDERING CONDITION AND WARNING HANDLING

1. Solder the device with the following conditions:
   1.1. Soldering temperature: 400 °C (max.)
   1.2. Soldering time: 3 s (max.)
2. If the temperature of the method portion rises in addition to the residual stress between the leads, the possibility that an open or short circuit occurs due to the deformation or destruction of the resin increases
3. The following methods: VPS and wave soldering, have not been suggested for the component assembly
4. Cleaning method conditions:
   4.1. Solvent: methyl alcohol, ethyl alcohol, isopropyl alcohol
   4.2. Solvent temperature < 45 °C (max.)
   4.3. Time: 3 min (min.)

For technical questions, contact: sensorstechsupport@vishay.com
THIS DOCUMENT IS SUBJECT TO CHANGE WITHOUT NOTICE. THE PRODUCTS DESCRIBED HEREIN AND THIS DOCUMENT ARE SUBJECT TO SPECIFIC DISCLAIMERS, SET FORTH AT www.vishay.com/doc?91000

chanhvinh.com

TAPE PACKAGING INFORMATION in millimeters

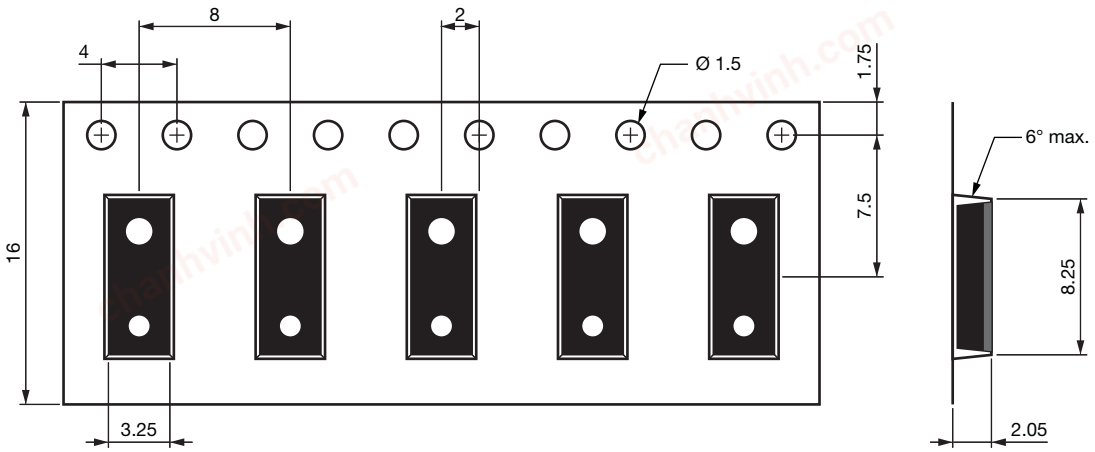

Fig. 16 - Package Carrier Tape

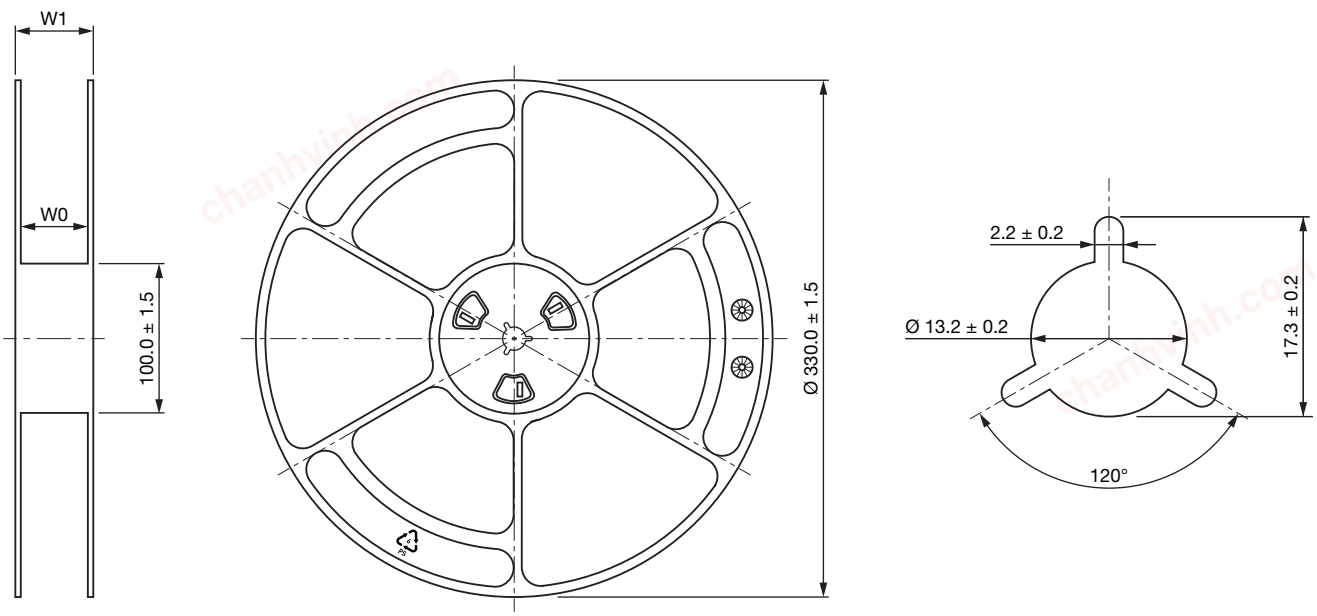

Fig. 17 - Reel Dimensions

For technical questions, contact: sensorstechsupport@vishay.com
THIS DOCUMENT IS SUBJECT TO CHANGE WITHOUT NOTICE. THE PRODUCTS DESCRIBED HEREIN AND THIS DOCUMENT ARE SUBJECT TO SPECIFIC DISCLAIMERS, SET FORTH AT www.vishay.com/doc?91000

chanhvinh.com

Disclaimer

ALL PRODUCT, PRODUCT SPECIFICATIONS AND DATA ARE SUBJECT TO CHANGE WITHOUT NOTICE TO IMPROVE RELIABILITY, FUNCTION OR DESIGN OR OTHERWISE.

Vishay Intertechnology, Inc., its affiliates, agents, and employees, and all persons acting on its or their behalf (collectively, “Vishay”), disclaim any and all liability for any errors, inaccuracies or incompleteness contained in any datasheet or in any other disclosure relating to any product.

Vishay makes no warranty, representation or guarantee regarding the suitability of the products for any particular purpose or the continuing production of any product. To the maximum extent permitted by applicable law, Vishay disclaims (i) any and all liability arising out of the application or use of any product, (ii) any and all liability, including without limitation special, consequential or incidental damages, and (iii) any and all implied warranties, including warranties of fitness for particular purpose, non-infringement and merchantability.

Statements regarding the suitability of products for certain types of applications are based on Vishay’s knowledge of typical requirements that are often placed on Vishay products in generic applications. Such statements are not binding statements about the suitability of products for a particular application. It is the customer’s responsibility to validate that a particular product with the properties described in the product specification is suitable for use in a particular application. Parameters provided in datasheets and / or specifications may vary in different applications and performance may vary over time. All operating parameters, including typical parameters, must be validated for each customer application by the customer’s technical experts. Product specifications do not expand or otherwise modify Vishay’s terms and conditions of purchase, including but not limited to the warranty expressed therein.

Except as expressly indicated in writing, Vishay products are not designed for use in medical, life-saving, or life-sustaining applications or for any other application in which the failure of the Vishay product could result in personal injury or death. Customers using or selling Vishay products not expressly indicated for use in such applications do so at their own risk. Please contact authorized Vishay personnel to obtain written terms and conditions regarding products designed for such applications.

No license, express or implied, by estoppel or otherwise, to any intellectual property rights is granted by this document or by any conduct of Vishay. Product names and markings noted herein may be trademarks of their respective owners.

© 2017 VISHAY INTERTECHNOLOGY, INC. ALL RIGHTS RESERVED