chanhvinh.com

Optocoupler, Phototransistor Output, AC Input, SOP-4L, Long Mini-Flat Package

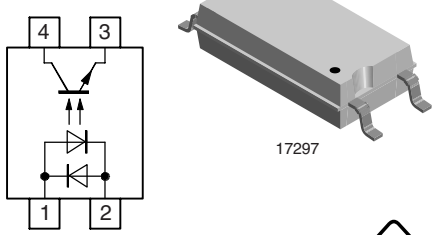

FEATURES

- Low profile package
- Extra low coupling capacity - typical 0.2 pF
- High common mode rejection
- AC input
- Creepage current resistance according to VDE 0303/IEC 60112 comparative tracking index: CTI ≥ 175
- Thickness through insulation ≥ 0.75 mm
- Creepage distance > 8 mm
- Lead (Pb)-free component
- Component in accordance to RoHS 2002/95/EC and WEEE 2002/96/EC

DESCRIPTION

The TCLT1600 consists of a phototransistor optically coupled to 2 gallium arsenide infrared-emitting diodes in an SOP6 4-pin wide body package.
The elements are mounted on one leadframe providing a fixed distance between input and output for highest safety requirements.

AGENCY APPROVALS

- UL1577, file no. E76222 system code U, double protection
- CSA 22.2 bulletin 5A, double protection
- DIN EN 60747-5-2 (VDE 0884)/DIN EN 60747-5-5 pending
- BSI IEC 60950 IEC 60065

APPLICATIONS

- Switch-mode power supplies
- Line receiver
- Computer peripheral interface
- Microprocessor system interface
- Reinforced isolation provides circuit protection against electrical shock (safety class II)
- Circuits for safe protective separation against electrical shock according to safety class II (reinforced isolation):
  - for appl. class I - IV at mains voltage ≤ 300 V
  - for appl. class I - III at mains voltage ≤ 600 V
  according to DIN EN 60747-5-2 (VDE 0884)/ DIN EN 60747-5-5 pending.

ORDER INFORMATION

PART	REMARKS
TCLT1600	CTR 80 to 300 %, SMD-4

ABSOLUTE MAXIMUM RATINGS (1)

PARAMETER	TEST CONDITION	SYMBOL	VALUE	UNIT
INPUT				
Reverse voltage		V_R	6	V
Forward current		I_F	± 60	mA
Forward surge current	$t_p \leq 10$ µs	I_{FSM}	± 1.5	A
Power dissipation		P_{diss}	100	mW
Junction temperature		T_j	125	°C
OUTPUT				
Collector emitter voltage		V_{CEO}	70	V
Emitter collector voltage		V_{ECO}	7	V
Collector current		I_C	50	mA
Collector peak current	$t_p/T = 0.5$, $t_p \leq 10$ ms	I_{CM}	100	mA
Power dissipation		P_{diss}	150	mW
Junction temperature		T_j	125	°C

chanhvinh.com

ABSOLUTE MAXIMUM RATINGS (1)

PARAMETER	TEST CONDITION	SYMBOL	VALUE	UNIT
COUPLER				
Isolation test voltage (RMS)		V_{ISO}	5000	V_{RMS}
Total power dissipation		P_{tot}	250	mW
Operating ambient temperature range		T_{amb}	- 40 to + 100	°C
Storage temperature range		T_{stg}	- 40 to + 100	°C
Soldering temperature (2)		T_{sld}	260	°C

Notes

(1) T_{amb} = 25 °C, unless otherwise specified.
Stresses in excess of the absolute maximum ratings can cause permanent damage to the device. Functional operation of the device is not implied at these or any other conditions in excess of those given in the operational sections of this document. Exposure to absolute maximum ratings for extended periods of the time can adversely affect reliability.

(2) Refer to reflow profile for soldering conditions for surface mounted devices.

ELECTRICAL CHARACTERISTCS

PARAMETER	TEST CONDITION	SYMBOL	MIN.	TYP.	MAX.	UNIT
INPUT						
Forward voltage	I_F = 50 mA	V_F		1.25	1.6	V
Junction capacitance	V_R = 0 V, f = 1 MHz	C_j		50		pF
OUTPUT						
Collector emitter voltage	I_C = 1 mA	V_{CEO}	70			V
Emitter collector voltage	I_E = 100 µA	V_{ECO}	7			V
Collector ermitter cut-off current	V_{CE} = 20 V, I_f = 0, E = 0	I_{CEO}		10	100	nA
COUPLER						
Collector emitter saturation voltage	I_F = 10 mA, I_C = 1 mA	V_{CEsat}			0.3	V
Cut-off frequency	V_{CE} = 5 V, I_F = 10 mA, R_L = 100 Ω	f_c		110		kHz
Coupling capacitance	f = 1 MHz	C_k		0.3		pF

Note

T_{amb} = 25 °C, unless otherwise specified.
Minimum and maximum values are tested requierements. Typical values are characteristics of the device and are the result of engineering evaluations. Typical values are for information only and are not part of the testing requirements.

CURRENT TRANSFER RATIO

PARAMETER	TEST CONDITION	SYMBOL	MIN.	TYP.	MAX.	UNIT
I_C/I_F	V_{CE} = 5 V, I_F = 5 mA	CTR	80		300	%

MAXIMUM SAFETY RATINGS

PARAMETER	TEST CONDITION	SYMBOL	MIN.	TYP.	MAX.	UNIT
INPUT						
Forward current		I_F			130	mA
OUTPUT						
Power dissipation		P_{diss}			265	mW
COUPLER						
Rated impulse voltage		V_{IOTM}			8	kV
Safety temperature		T_{si}			150	°C

Note

According to DIN EN 60747-5-2 (VDE 0884)/DIN EN 60747-5-5 pending (see figure 1). This optocoupler is suitable for safe electrical isolation only within the safety ratings. Compliance with the safety ratings shall be ensured by means of suitable protective circuits.

chanhvinh.com

INSULATION RATED PARAMETERS						
PARAMETER	**TEST CONDITION**	**SYMBOL**	**MIN.**	**TYP.**	**MAX.**	**UNIT**
Partial discharge test voltage - routine test	100 %, t_{test} = 1 s	V_{pd}	2.0			kV
Partial discharge test voltage - lot test (sample test)	t_{Tr} = 60 s, t_{test} = 10 s, (see figure 2)	V_{IOTM}	8			kV
		V_{pd}	1.68			kV
Insulation resistance	V_{IO} = 500 V	R_{IO}	10^{12}			Ω
	V_{IO} = 500 V, T_{amb} = 100 °C	R_{IO}	10^{11}			Ω
	V_{IO} = 500 V, T_{amb} = 150 °C (construction test only)	R_{IO}	10^{9}			Ω

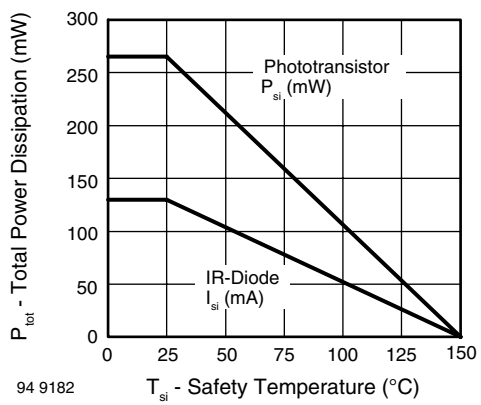

Fig. 1 - Derating Diagram

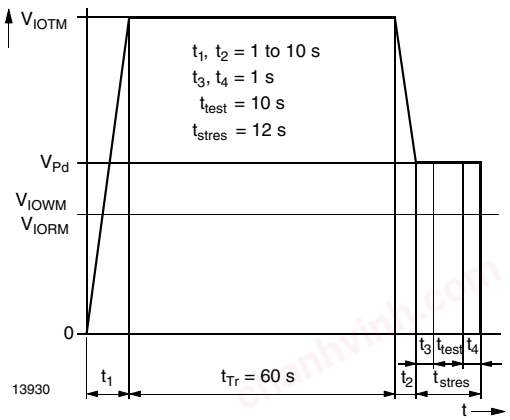

Fig. 2 - Test Pulse Diagram for Sample Test According to DIN EN 60747-5-2 (VDE 0884)/DIN EN 60747-; IEC60747

SWITCHING CHARACTERISTICS						
PARAMETER	**TEST CONDITION**	**SYMBOL**	**MIN.**	**TYP.**	**MAX.**	**UNIT**
Delay time	V_S = 5 V, I_C = 2 mA, R_L = 100 Ω, (see figure 3)	t_d		3.0		µs
Rise time	V_S = 5 V, I_C = 2 mA, R_L = 100 Ω, (see figure 3)	t_r		3.0		µs
Turn-on time	V_S = 5 V, I_C = 2 mA, R_L = 100 Ω, (see figure 3)	t_{on}		6.0		µs
Storage time	V_S = 5 V, I_C = 2 mA, R_L = 100 Ω, (see figure 3)	t_s		0.3		µs
Fall time	V_S = 5 V, I_C = 2 mA, R_L = 100 Ω, (see figure 3)	t_f		4.7		µs
Turn-off time	V_S = 5 V, I_C = 2 mA, R_L = 100 Ω, (see figure 3)	t_{off}		5.0		µs
Turn-on time	V_S = 5 V, I_F = 10 mA, R_L = 1 kΩ, (see figure 4)	t_{on}		9.0		µs
Turn-off time	V_S = 5 V, I_F = 10 mA, R_L = 1 kΩ, (see figure 4)	t_{off}		10.0		µs

chanhvinh.com

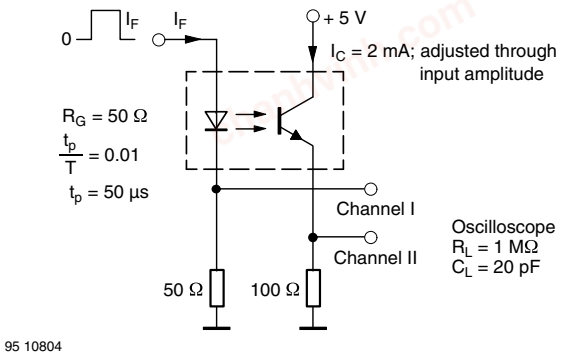

Fig. 3 - Test Circuit, Non-Saturated Operation

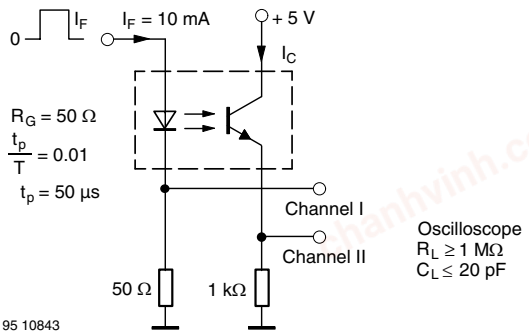

Fig. 5 - Test Circuit, Saturated Operation

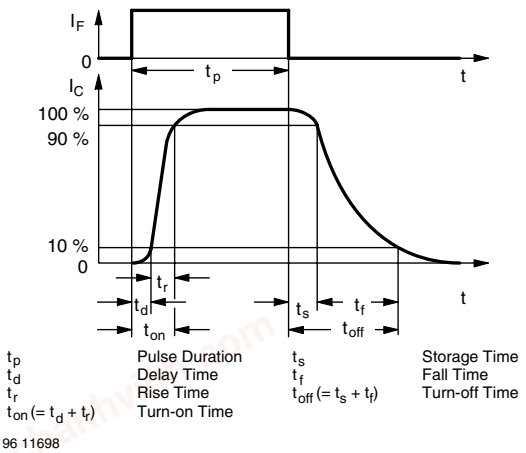

Fig. 4 - Switching Times

TYPICAL CHARACTERISTICS

T_{amb} = 25 °C, unless otherwise specified

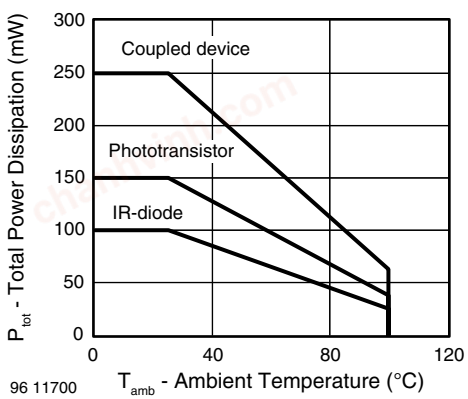

Fig. 6 - Total Power Dissipation vs. Ambient Temperature

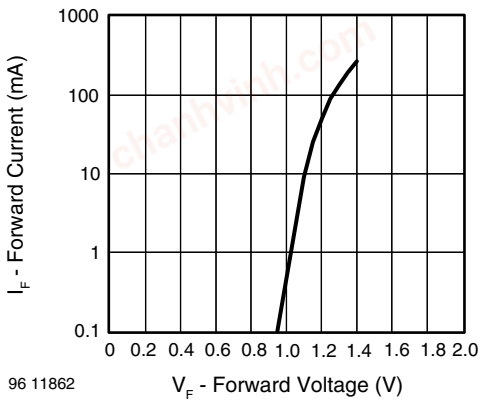

Fig. 7 - Forward Current vs. Forward Voltage

chanhvinh.com

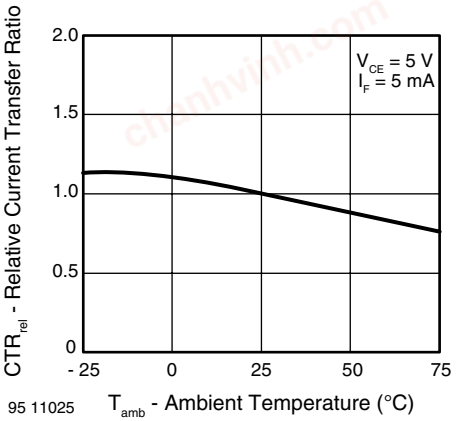

Fig. 8 - Relative Current Transfer Ratio vs. Ambient Temperature

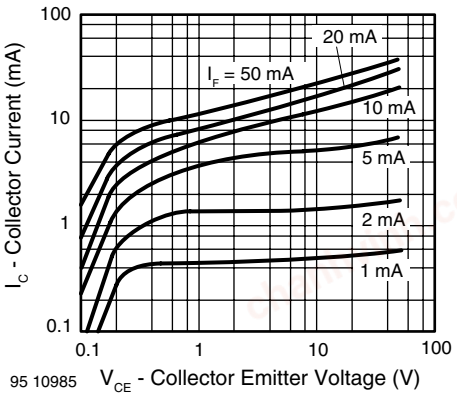

Fig. 11 - Collector Current vs. Collector Emitter Voltage

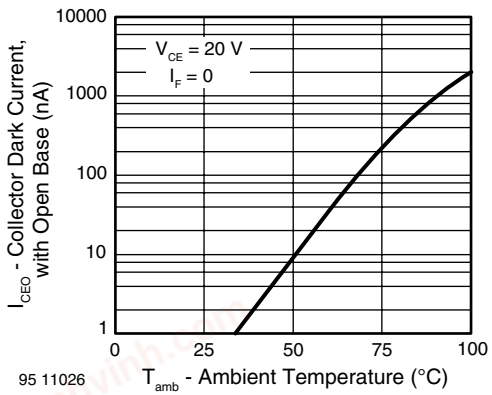

Fig. 9 - Collector Dark Current vs. Ambient Temperature

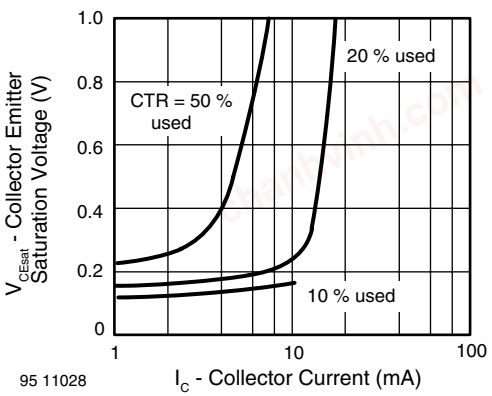

Fig. 12 - Collector Emitter Saturation Voltage vs. Collector Current

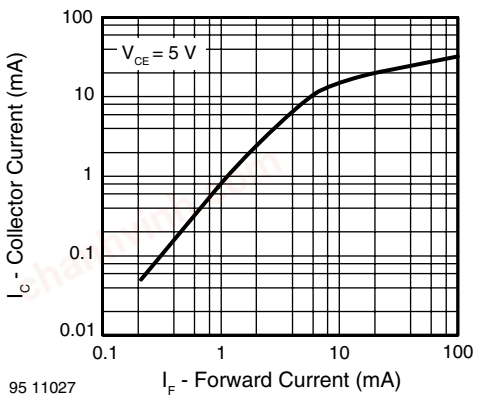

Fig. 10 - Collector Current vs. Forward Current

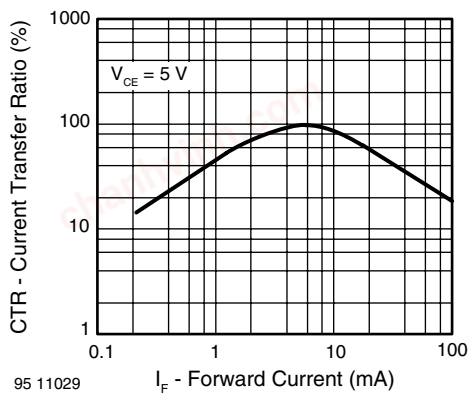

Fig. 13 - Current Transfer Ratio vs. Forward Current

chanhvinh.com

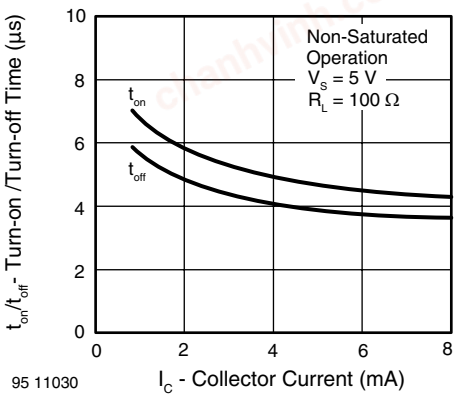

Fig. 14 - Turn-on/off Time vs. Collector Current

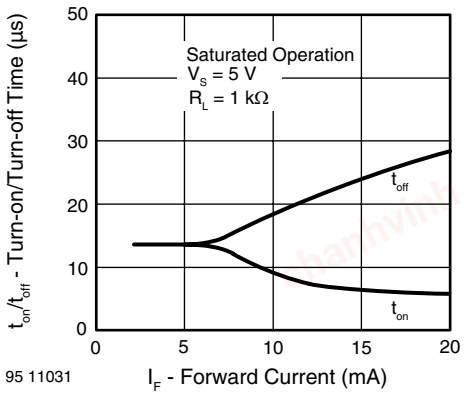

Fig. 15 - Turn-on/off Time vs. Forward Current

PACKAGE DIMENSIONS in millimeters

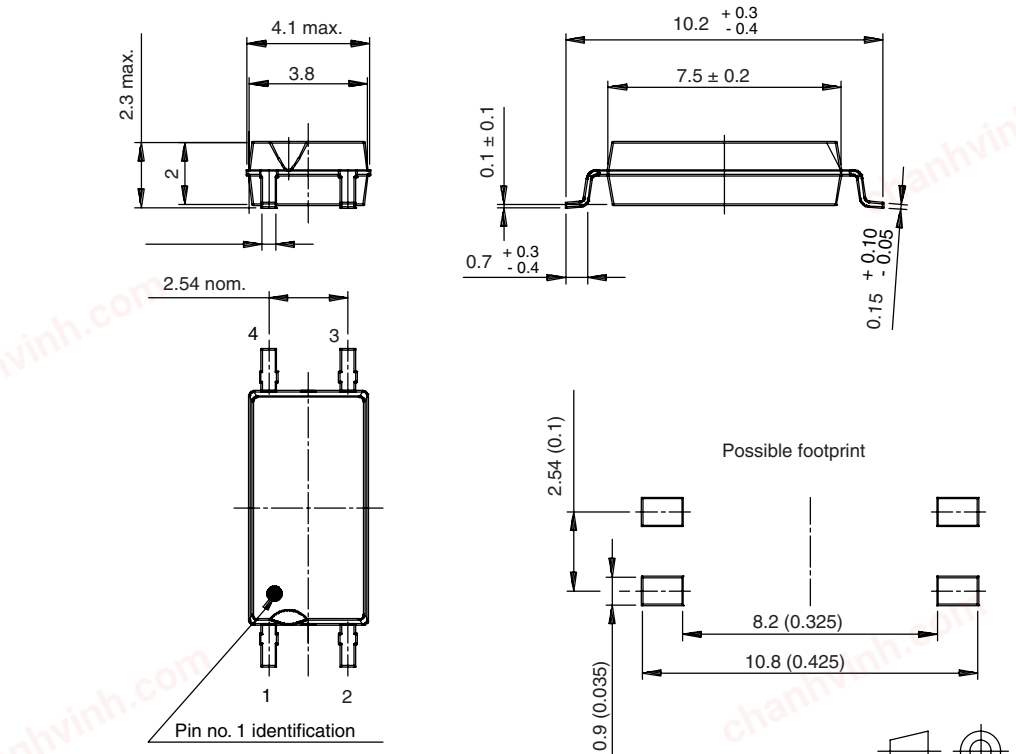

Drawing-No.: 6.544-5331.01-4
Issue: 1; 04.04.00
15243

chanhvinh.com

OZONE DEPLETING SUBSTANCES POLICY STATEMENT

It is the policy of Vishay Semiconductor GmbH to

1. Meet all present and future national and international statutory requirements.
2. Regularly and continuously improve the performance of our products, processes, distribution and operating systems with respect to their impact on the health and safety of our employees and the public, as well as their impact on the environment.

It is particular concern to control or eliminate releases of those substances into the atmosphere which are known as ozone depleting substances (ODSs).

The Montreal Protocol (1987) and its London Amendments (1990) intend to severely restrict the use of ODSs and forbid their use within the next ten years. Various national and international initiatives are pressing for an earlier ban on these substances.

Vishay Semiconductor GmbH has been able to use its policy of continuous improvements to eliminate the use of ODSs listed in the following documents.

1. Annex A, B and list of transitional substances of the Montreal Protocol and the London Amendments respectively.
2. Class I and II ozone depleting substances in the Clean Air Act Amendments of 1990 by the Environmental Protection Agency (EPA) in the USA.
3. Council Decision 88/540/EEC and 91/690/EEC Annex A, B and C (transitional substances) respectively.

Vishay Semiconductor GmbH can certify that our semiconductors are not manufactured with ozone depleting substances and do not contain such substances.

We reserve the right to make changes to improve technical design
and may do so without further notice.
Parameters can vary in different applications. All operating parameters must be validated for each customer application by the customer. Should the buyer use Vishay Semiconductors products for any unintended or unauthorized application, the buyer shall indemnify Vishay Semiconductors against all claims, costs, damages, and expenses, arising out of, directly or indirectly, any claim of personal damage, injury or death associated with such unintended or unauthorized use.

Vishay Semiconductor GmbH, P.O.B. 3535, D-74025 Heilbronn, Germany

chanhvinh.com

Disclaimer

All product specifications and data are subject to change without notice.

Vishay Intertechnology, Inc., its affiliates, agents, and employees, and all persons acting on its or their behalf (collectively, “Vishay”), disclaim any and all liability for any errors, inaccuracies or incompleteness contained herein or in any other disclosure relating to any product.

Vishay disclaims any and all liability arising out of the use or application of any product described herein or of any information provided herein to the maximum extent permitted by law. The product specifications do not expand or otherwise modify Vishay’s terms and conditions of purchase, including but not limited to the warranty expressed therein, which apply to these products.

No license, express or implied, by estoppel or otherwise, to any intellectual property rights is granted by this document or by any conduct of Vishay.

The products shown herein are not designed for use in medical, life-saving, or life-sustaining applications unless otherwise expressly indicated. Customers using or selling Vishay products not expressly indicated for use in such applications do so entirely at their own risk and agree to fully indemnify Vishay for any damages arising or resulting from such use or sale. Please contact authorized Vishay personnel to obtain written terms and conditions regarding products designed for such applications.

Product names and markings noted herein may be trademarks of their respective owners.