chanhvinh.com

Optocoupler, Phototransistor Output, SOP-6L5, Half Pitch, Long Mini-Flat Package

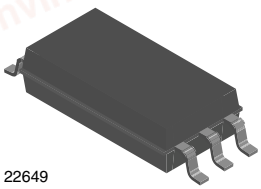

22649

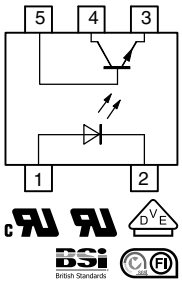

FEATURES

- SMD low profile 5 pin package
- Isolation test voltage 5000 V_{RMS}
- CTR flexibility available see order information
- Special construction
- Extra low coupling capacitance
- Connected base
- DC input with transistor output
- Creepage distance > 8 mm
- Material categorization: For definitions of compliance please see www.vishay.com/doc?99912

Pb-free

e3

RoHS COMPLIANT

DESCRIPTION

The TCLT110. series consists of a phototransistor optically coupled to a gallium arsenide infrared-emitting diode in a 5-lead SOP-6L package.

APPLICATIONS

- Switchmode power supplies
- Computer peripheral interface
- Microprocessor system interface

AGENCY APPROVALS

- UL1577, file no. E76222
- CSA E76222 22.2 bulletin 5A
- BSI IEC 60950 IEC 60065
- DIN EN 60747-5-5
- FIMKO
- CQC

Note

- See the safety standard approval list “Agency Table” for more detailed information.

ORDERING INFORMATION

T	C	L	T	1	1	0	#

PART NUMBER

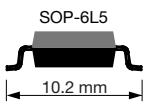

AGENCY CERTIFIED/PACKAGE	CTR (%)								
	5 mA	10 mA			5 mA				
UL, cUL, VDE, BSI, FIMKO	50 to 600	63 to 125	100 to 200	160 to 320	50 to 150	100 to 300	80 to 160	130 to 260	200 to 400
SOP-6L5	TCLT1100	TCLT1102	TCLT1103	TCLT1104	TCLT1105	TCLT1106	TCLT1107	TCLT1108	TCLT1109

For technical questions, contact: optocoupleranswers@vishay.com

THIS DOCUMENT IS SUBJECT TO CHANGE WITHOUT NOTICE. THE PRODUCTS DESCRIBED HEREIN AND THIS DOCUMENT ARE SUBJECT TO SPECIFIC DISCLAIMERS, SET FORTH AT www.vishay.com/doc?91000

chanhvinh.com

ABSOLUTE MAXIMUM RATINGS (T_{amb} = 25 °C, unless otherwise specified)				
PARAMETER	**TEST CONDITION**	**SYMBOL**	**VALUE**	**UNIT**
INPUT				
Reverse voltage		V_R	6	V
Forward current		I_F	60	mA
Forward surge current	$t_P \leq 10$ µs	I_{FSM}	1.5	A
Power dissipation		P_{diss}	100	mW
Junction temperature		T_j	125	°C
OUTPUT				
Collector emitter voltage		V_{CEO}	80	V
Emitter collector voltage		V_{ECO}	7	V
Collector current		I_C	50	mA
Collector peak current	$t_P/T = 0.5$, $t_P \leq 10$ ms	I_{CM}	100	mA
Power dissipation		P_{diss}	150	mW
Junction temperature		T_j	125	°C
COUPLER				
Isolation test voltage (RMS)		V_{ISO}	5000	V_{RMS}
Total power dissipation		P_{tot}	250	mW
Operating ambient temperature range		T_{amb}	- 55 to + 100	°C
Storage temperature range		T_{stg}	- 55 to + 125	°C
Soldering temperature [1]		T_{sld}	260	°C

Notes

- Stresses in excess of the absolute maximum ratings can cause permanent damage to the device. Functional operation of the device is not implied at these or any other conditions in excess of those given in the operational sections of this document. Exposure to absolute maximum ratings for extended periods of the time can adversely affect reliability.

(1) Wave soldering three cycles are allowed. Also refer to “Assembly Instruction” (www.vishay.com/doc?80054).

ELECTRICAL CHARACTERISTICS (T_{amb} = 25 °C, unless otherwise specified)						
PARAMETER	**TEST CONDITION**	**SYMBOL**	**MIN.**	**TYP.**	**MAX.**	**UNIT**
INPUT						
Forward voltage	$I_F = \pm 50$ mA	V_F		1.25	1.6	V
Junction capacitance	$V_R = 0$ V, f = 1 MHz	C_j		50		pF
OUTPUT						
Collector emitter voltage	$I_C = 1$ mA	V_{CEO}	70			V
Emitter collector voltage	$I_E = 100$ µA	V_{ECO}	7			V
Collector emitter leakage current	$V_{CE} = 20$ V, $I_F = 0$ A	I_{CEO}		10	100	nA
COUPLER						
Collector emitter saturation voltage	$I_F = 10$ mA, $I_C = 1$ mA	V_{CEsat}			0.3	V
Cut-off frequency	$V_{CE} = 5$ V, $I_F = 10$ mA, $R_L = 100\ \Omega$	f_c		110		kHz
Coupling capacitance	f = 1 MHz	C_k		0.3		pF

Note

- Minimum and maximum values are testing requirements. Typical values are characteristics of the device and are the result of engineering evaluation. Typical values are for information only and are not part of the testing requirements.

For technical questions, contact: optocoupleranswers@vishay.com
THIS DOCUMENT IS SUBJECT TO CHANGE WITHOUT NOTICE. THE PRODUCTS DESCRIBED HEREIN AND THIS DOCUMENT ARE SUBJECT TO SPECIFIC DISCLAIMERS, SET FORTH AT www.vishay.com/doc?91000

chanhvinh.com

CURRENT TRANSFER RATIO (T_{amb} = 25 °C, unless otherwise specified)							
PARAMETER	**TEST CONDITION**	**PART**	**SYMBOL**	**MIN.**	**TYP.**	**MAX.**	**UNIT**
I_C/I_F	V_{CE} = 5 V, I_F = 5 mA	TCLT1100	CTR	50		600	%
	V_{CE} = 5 V, I_F = 10 mA	TCLT1102	CTR	63		125	%
		TCLT1103	CTR	100		200	%
		TCLT1104	CTR	160		320	%
	V_{CE} = 5 V, I_F = 1 mA	TCLT1102	CTR	22	45		%
		TCLT1103	CTR	34	70		%
		TCLT1104	CTR	56	100		%
	V_{CE} = 5 V, I_F = 5 mA	TCLT1105	CTR	50		150	%
		TCLT1106	CTR	100		300	%
		TCLT1107	CTR	80		160	%
		TCLT1108	CTR	130		260	%
		TCLT1109	CTR	200		400	%

SAFETY AND INSULATION RATED PARAMETERS						
PARAMETER	**TEST CONDITION**	**SYMBOL**	**MIN.**	**TYP.**	**MAX.**	**UNIT**
Partial discharge test voltage - routine test	100 %, t_{test} = 1 s	V_{pd}	2.0			kV
Partial discharge test voltage - lot test (sample test)	t_{Tr} = 60 s, t_{test} = 10 s, (see figure 2)	V_{IOTM}	8			kV
		V_{pd}	1.68			kV
Insulation resistance	V_{IO} = 500 V	R_{IO}	10^{12}			Ω
	V_{IO} = 500 V, T_{amb} = 100 °C	R_{IO}	10^{11}			Ω
	V_{IO} = 500 V, T_{amb} = 150 °C (construction test only)	R_{IO}	10^{9}			Ω
Forward current		I_{si}	130			mA
Power dissipation		P_{so}	265			mW
Rated impulse voltage		V_{IOTM}	8			kV
Safety temperature		T_{si}	150			°C
Clearance distance			8.0			mm
Creepage distance			8.0			mm
Insulation distance (internal)			0.40			mm

Note

- According to DIN EN 60747-5-2 (VDE 0884) (see figure 2). This optocoupler is suitable for safe electrical isolation only within the safety ratings. Compliance with the safety ratings shall be ensured by means of suitable protective circuits.

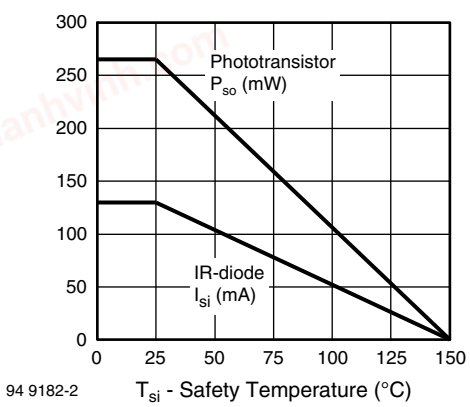

Fig. 1 - Derating Diagram

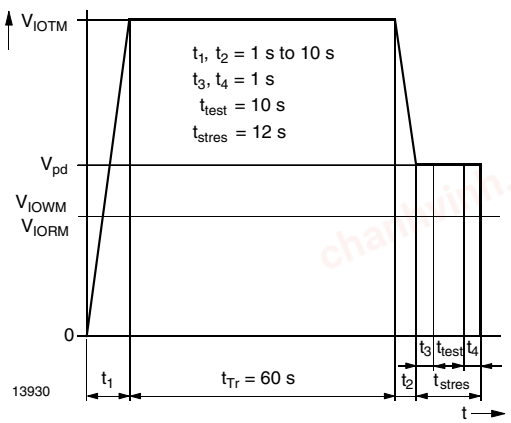

Fig. 2 - Test Pulse Diagram for Sample Test According to DIN EN 60747-5-2 (VDE 0884); IEC 60747-5-5

For technical questions, contact: optocoupleranswers@vishay.com
THIS DOCUMENT IS SUBJECT TO CHANGE WITHOUT NOTICE. THE PRODUCTS DESCRIBED HEREIN AND THIS DOCUMENT ARE SUBJECT TO SPECIFIC DISCLAIMERS, SET FORTH AT www.vishay.com/doc?91000

chanhvinh.com

SWITCHING CHARACTERISTICS (T_{amb} = 25 °C, unless otherwise specified)						
PARAMETER	**TEST CONDITION**	**SYMBOL**	**MIN.**	**TYP.**	**MAX.**	**UNIT**
Delay time	V_S = 5 V, I_C = 2 mA, R_L = 100 Ω, (see figure 3)	t_d		3.0		µs
Rise time	V_S = 5 V, I_C = 2 mA, R_L = 100 Ω, (see figure 3)	t_r		3.0		µs
Turn-on time	V_S = 5 V, I_C = 2 mA, R_L = 100 Ω, (see figure 3)	t_{on}		6.0		µs
Storage time	V_S = 5 V, I_C = 2 mA, R_L = 100 Ω, (see figure 3)	t_s		0.3		µs
Fall time	V_S = 5 V, I_C = 2 mA, R_L = 100 Ω, (see figure 3)	t_f		4.7		µs
Turn-off time	V_S = 5 V, I_C = 2 mA, R_L = 100 Ω, (see figure 3)	t_{off}		5.0		µs
Turn-on time	V_S = 5 V, I_F = 10 mA, R_L = 1 kΩ, (see figure 4)	t_{on}		9.0		µs
Turn-off time	V_S = 5 V, I_F = 10 mA, R_L = 1 kΩ, (see figure 4)	t_{off}		10.0		µs

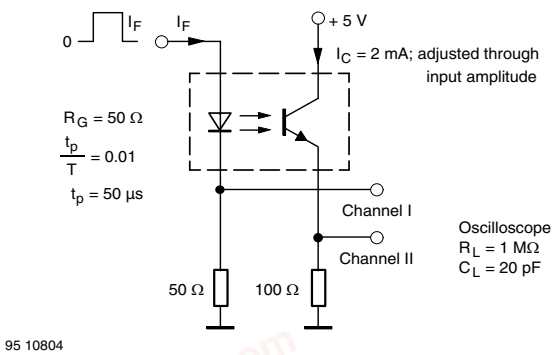

Fig. 3 - Test Circuit, Non-Saturated Operation

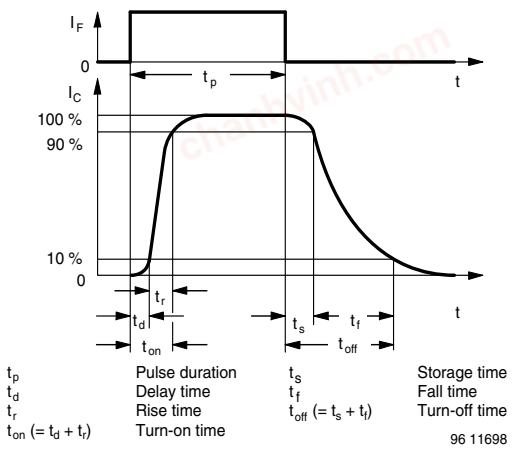

Fig. 5 - Switching Times

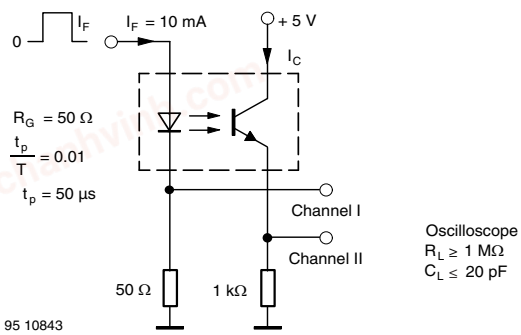

Fig. 4 - Test Circuit, Saturated Operation

For technical questions, contact: optocoupleranswers@vishay.com
THIS DOCUMENT IS SUBJECT TO CHANGE WITHOUT NOTICE. THE PRODUCTS DESCRIBED HEREIN AND THIS DOCUMENT ARE SUBJECT TO SPECIFIC DISCLAIMERS, SET FORTH AT www.vishay.com/doc?91000

chanhvinh.com

PACKAGE DIMENSIONS in millimeters

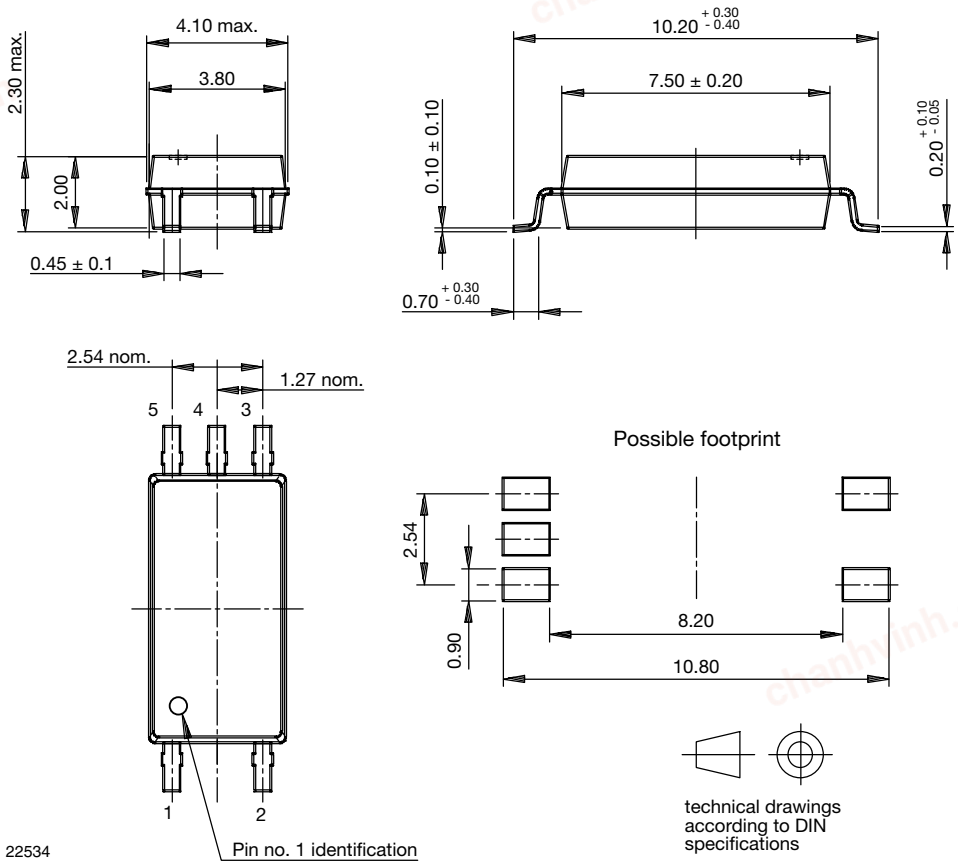

PACKAGE MARKING (example)

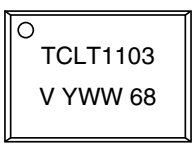

TAPE AND REEL DIMENSIONS in millimeters

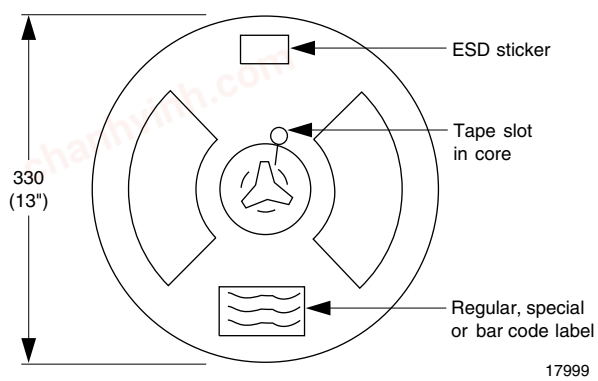

Fig. 6 - Reel Dimensions (3000 units per reel)

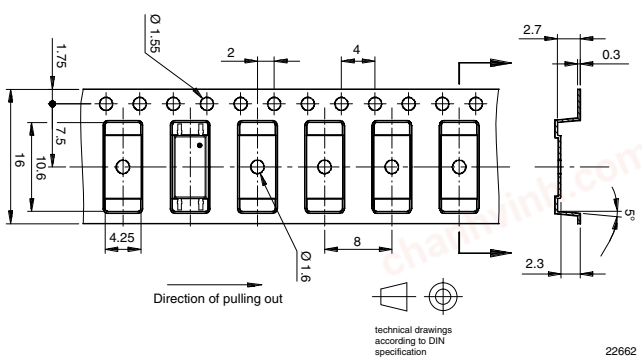

Fig. 7 - Tape Dimensions

For technical questions, contact: optocoupleranswers@vishay.com

THIS DOCUMENT IS SUBJECT TO CHANGE WITHOUT NOTICE. THE PRODUCTS DESCRIBED HEREIN AND THIS DOCUMENT ARE SUBJECT TO SPECIFIC DISCLAIMERS, SET FORTH AT www.vishay.com/doc?91000

chanhvinh.com

Disclaimer

ALL PRODUCT, PRODUCT SPECIFICATIONS AND DATA ARE SUBJECT TO CHANGE WITHOUT NOTICE TO IMPROVE RELIABILITY, FUNCTION OR DESIGN OR OTHERWISE.

Vishay Intertechnology, Inc., its affiliates, agents, and employees, and all persons acting on its or their behalf (collectively, “Vishay”), disclaim any and all liability for any errors, inaccuracies or incompleteness contained in any datasheet or in any other disclosure relating to any product.

Vishay makes no warranty, representation or guarantee regarding the suitability of the products for any particular purpose or the continuing production of any product. To the maximum extent permitted by applicable law, Vishay disclaims (i) any and all liability arising out of the application or use of any product, (ii) any and all liability, including without limitation special, consequential or incidental damages, and (iii) any and all implied warranties, including warranties of fitness for particular purpose, non-infringement and merchantability.

Statements regarding the suitability of products for certain types of applications are based on Vishay's knowledge of typical requirements that are often placed on Vishay products in generic applications. Such statements are not binding statements about the suitability of products for a particular application. It is the customer's responsibility to validate that a particular product with the properties described in the product specification is suitable for use in a particular application. Parameters provided in datasheets and / or specifications may vary in different applications and performance may vary over time. All operating parameters, including typical parameters, must be validated for each customer application by the customer's technical experts. Product specifications do not expand or otherwise modify Vishay's terms and conditions of purchase, including but not limited to the warranty expressed therein.

Hyperlinks included in this datasheet may direct users to third-party websites. These links are provided as a convenience and for informational purposes only. Inclusion of these hyperlinks does not constitute an endorsement or an approval by Vishay of any of the products, services or opinions of the corporation, organization or individual associated with the third-party website. Vishay disclaims any and all liability and bears no responsibility for the accuracy, legality or content of the third-party website or for that of subsequent links.

Except as expressly indicated in writing, Vishay products are not designed for use in medical, life-saving, or life-sustaining applications or for any other application in which the failure of the Vishay product could result in personal injury or death. Customers using or selling Vishay products not expressly indicated for use in such applications do so at their own risk. Please contact authorized Vishay personnel to obtain written terms and conditions regarding products designed for such applications.

No license, express or implied, by estoppel or otherwise, to any intellectual property rights is granted by this document or by any conduct of Vishay. Product names and markings noted herein may be trademarks of their respective owners.

© 2022 VISHAY INTERTECHNOLOGY, INC. ALL RIGHTS RESERVED