chanhvinh.com

Aluminum Electrolytic Capacitors
Power High Ripple Current Miniaturized Snap-In



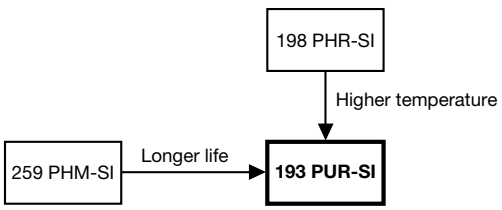

Fig. 1

FEATURES

- Compact design
- Useful life: 5000 h at 105 °C
- > 25 years 24/7 application life at 60 °C
- Available up to 500 V
- 10 % to 30 % higher ripple current than similar sized standard products
- Keyed polarity snap-in version available
- Material categorization: for definitions of compliance please see www.vishay.com/doc?99912

Pb-free

RoHS COMPLIANT

APPLICATIONS

- Solar PV inverters
- Motor controls / small drives
- Standard and switched mode power supplies
- Industrial air conditioning
- Industrial lamp driver
- Welding / cutting / melting
- Uninterruptable power supply (UPS)

MARKING

The capacitors are marked (where possible) with the following information:

- Rated capacitance (in µF)
- Tolerance code on rated capacitance, code letter in accordance with IEC 60062 (M for ± 20 %)
- Rated voltage (in V)
- Date code (YYMM or in 2 digits according to IEC 60062)
- Name of manufacturer
- Code for factory of origin
- "-" sign to identify the negative terminal, visible from the top and side of the capacitor
- Code number, at least last 8 digits 193 xxxxx
- Climatic category in accordance with IEC 60068

QUICK REFERENCE DATA		
DESCRIPTION	VALUE	
Nominal case size (Ø D x L in mm)	22 x 25 to 35 x 60	
Rated capacitance range, C_R	47 µF to 820 µF	
Tolerance on C_R	± 20 %	
Rated voltage range, U_R	400 V to 450 V	500 V
Category temperature range	-40 °C to 105 °C	-25 °C to 105 °C
Endurance test at 105 °C	2000 h	
Useful life at 105 °C	5000 h	
Shelf life at 0 V, 105 °C	1000 h	
Based on sectional specification	IEC 60384-4 / EN 130300	
Climatic category IEC 60068	40 / 105 / 56	25 / 105 / 56

SELECTION CHART FOR C_R, U_R, AND RELEVANT NOMINAL CASE SIZES (Ø D x L in mm)

C_R (µF)	U_R (V)		
	400	450	500
47	-	-	22 x 25
56	-	-	25 x 25
68	22 x 25	22 x 25	22 x 30
82	-	22 x 30 25 x 25	22 x 35 25 x 30
100	22 x 30 25 x 25	-	22 x 40
120	-	22 x 35 25 x 30 30 x 25	25 x 35 30 x 30 35 x 25
150	22 x 35 25 x 30 30 x 25	22 x 40 25 x 35	25 x 45

For technical questions, contact: aluminumcaps2@vishay.com

THIS DOCUMENT IS SUBJECT TO CHANGE WITHOUT NOTICE. THE PRODUCTS DESCRIBED HEREIN AND THIS DOCUMENT ARE SUBJECT TO SPECIFIC DISCLAIMERS, SET FORTH AT www.vishay.com/doc?91000

chanhvinh.com

SELECTION CHART FOR C_R, U_R, AND RELEVANT NOMINAL CASE SIZES (Ø D x L in mm)			
C_R (µF)	U_R (V)		
	400	450	500
180	22 x 45 25 x 35	25 x 40 30 x 30 35 x 25	30 x 35 35 x 30
220	25 x 40 30 x 30	25 x 50 30 x 35 35 x 30	30 x 40
270	25 x 50 30 x 35	30 x 40	30 x 50 35 x 35
330	30 x 40 35 x 30	35 x 35	35 x 45
390	30 x 45	35 x 40	35 x 50
470	30 x 50 35 x 40	35 x 50	-
560	35 x 45	35 x 55	35 x 55
680	35 x 50	-	-
820	35 x 60	-	-

DIMENSIONS in millimeters AND AVAILABLE FORMS

TWO TERMINAL SNAP-IN

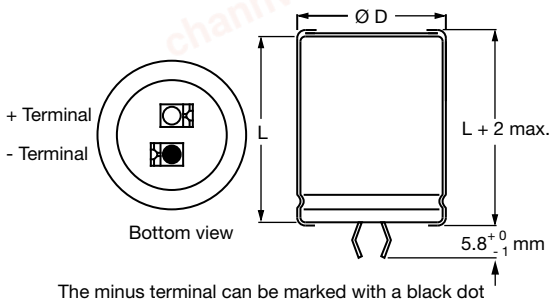

The minus terminal can be marked with a black dot or with an imprinted "-" sign.

Fig. 2 - Two terminal snap-in

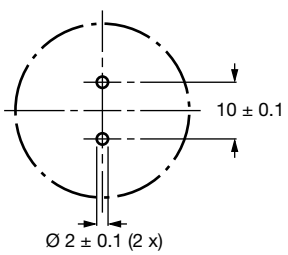

Fig. 3 - Mounting hole diagram

THREE TERMINAL SNAP-IN

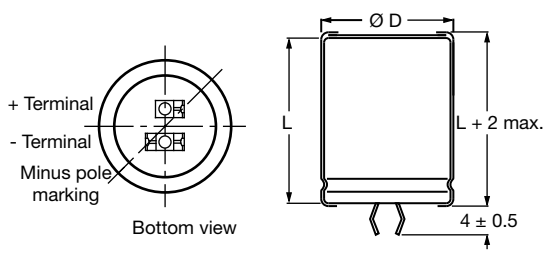

The negative terminal has **TWO** pins which are **BOTH** electrically connected

Fig. 4 - Three terminal snap-in

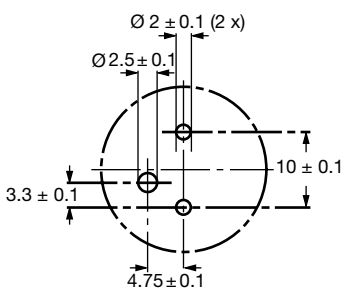

The 10 mm spacing of the 2 pin snap-in is used as the base layout and a third hole is added. The third hole is closer to the negative primary hole so that polarization is always maintained, together with added mechanical stability.

Fig. 5 - Mounting hole diagram

For technical questions, contact: aluminumcaps2@vishay.com
THIS DOCUMENT IS SUBJECT TO CHANGE WITHOUT NOTICE. THE PRODUCTS DESCRIBED HEREIN AND THIS DOCUMENT ARE SUBJECT TO SPECIFIC DISCLAIMERS, SET FORTH AT www.vishay.com/doc?91000

chanhvinh.com

Table 1

DIMENSIONS in millimeters, **MASS AND PACKAGING QUANTITIES**					
NOMINAL CASE SIZE Ø D x L	**Ø $D_{max.}$**	**$L_{max.}$**	**MASS (g)**	**PACKAGING QUANTITIES (units per box)**	**CARDBOARD BOX DIMENSIONS L x W x H**
22 x 25	23	27	≈ 12	100	260 x 250 x 39
22 x 30	23	32	≈ 16	100	260 x 250 x 44
22 x 35	23	37	≈ 20	100	260 x 250 x 49
22 x 40	23	42	≈ 23	100	260 x 250 x 54
22 x 45	23	47	≈ 26	100	260 x 250 x 59
25 x 25	26	27	≈ 20	100	290 x 280 x 39
25 x 30	26	32	≈ 22	100	290 x 280 x 44
25 x 35	26	37	≈ 24	100	290 x 280 x 49
25 x 40	26	42	≈ 27	100	290 x 280 x 54
25 x 45	26	47	≈ 32	100	290 x 280 x 59
25 x 50	26	52	≈ 38	100	290 x 280 x 64
30 x 25	31	27	≈ 25	100	340 x 330 x 39
30 x 30	31	32	≈ 30	100	340 x 330 x 44
30 x 35	31	37	≈ 35	100	340 x 330 x 49
30 x 40	31	42	≈ 40	100	340 x 330 x 54
30 x 45	31	47	≈ 45	100	340 x 330 x 59
30 x 50	31	52	≈ 50	100	340 x 330 x 64
35 x 25	36	27	≈ 33	50	390 x 198 x 39
35 x 30	36	32	≈ 40	50	390 x 198 x 44
35 x 35	36	37	≈ 48	50	390 x 198 x 49
35 x 40	36	42	≈ 55	50	390 x 198 x 54
35 x 45	36	47	≈ 63	50	390 x 198 x 59
35 x 50	36	52	≈ 72	50	390 x 198 x 64
35 x 55	36	57	≈ 80	50	390 x 198 x 69
35 x 60	36	62	≈ 82	50	390 x 198 x 74

ELECTRICAL DATA	
SYMBOL	**DESCRIPTION**
C_R	Rated capacitance at 100 Hz
I_R	Rated RMS ripple current at 100 Hz, 105 °C
I_{L5}	Max. leakage current after 5 min at U_R
ESR	Typ. / max. equivalent series resistance at 100 Hz
Z	Typ. / max. impedance at 10 kHz

Notes

- Unless otherwise specified, all electrical values in Table 2 apply at T_{amb} = 20 °C, P = 86 kPa to 106 kPa, RH = 45 % to 75 %

ORDERING EXAMPLE

Electrolytic capacitor 193 series

330 µF / 450 V; ± 20 %

Nominal case size: Ø 35 mm x 35 mm

2-terminal snap-in:

Ordering code: MAL219357331E3

3-terminal snap-in:

Ordering code: MAL219317331E3

For technical questions, contact: aluminumcaps2@vishay.com
THIS DOCUMENT IS SUBJECT TO CHANGE WITHOUT NOTICE. THE PRODUCTS DESCRIBED HEREIN AND THIS DOCUMENT ARE SUBJECT TO SPECIFIC DISCLAIMERS, SET FORTH AT www.vishay.com/doc?91000

chanhvinh.com

Table 2

ELECTRICAL DATA AND ORDERING INFORMATION								
U_R (V)	C_R 100 Hz (µF)	NOMINAL CASE SIZE Ø D x L (mm)	I_R 100 Hz 105 °C (A)	I_L 1 min (mA)	MAX. ESR 100 Hz (mΩ)	MAX. Z 10 kHz (mΩ)	ORDERING CODE MAL2193.....	
							2-TERM.	3-TERM.
400	68	22 x 25	0.69	0.167	1150	640	56689E3	16689E3
	100	22 x 30	0.87	0.244	790	440	56101E3	16101E3
	100	25 x 25	0.87	0.244	800	460	66101E3	26101E3
	150	22 x 35	1.11	0.364	530	300	66151E3	26151E3
	150	25 x 30	1.1	0.364	540	310	56151E3	16151E3
	150	30 x 25	1.13	0.364	570	330	76151E3	36151E3
	180	22 x 45	1.32	0.436	440	250	56181E3	16181E3
	180	25 x 35	1.26	0.436	450	250	66181E3	26181E3
	220	25 x 40	1.45	0.532	370	210	66221E3	26221E3
	220	30 x 30	1.41	0.532	390	230	76221E3	36221E3
	270	25 x 50	1.78	0.652	300	170	56271E3	16271E3
	270	30 x 35	1.62	0.652	320	190	66271E3	26271E3
	330	30 x 40	1.84	0.796	260	155	56331E3	16331E3
	330	35 x 30	1.78	0.796	300	190	66331E3	26331E3
	390	30 x 45	2.08	0.94	220	130	56391E3	16391E3
	390	35 x 35	2.02	0.94	240	150	66391E3	26391E3
	470	30 x 50	2.36	1.132	190	110	56471E3	16471E3
	470	35 x 40	2.26	1.132	210	130	66471E3	26471E3
	560	35 x 45	2.52	1.348	170	110	56561E3	16561E3
	680	35 x 50	2.82	1.636	150	90	56681E3	16681E3
	820	35 x 60	3.27	1.972	120	80	56821E3	16821E3
450	68	22 x 25	0.7	0.188	1080	590	57689E3	17689E3
	82	22 x 30	0.8	0.225	890	490	67829E3	27829E3
	82	25 x 25	0.8	0.225	910	500	57829E3	17829E3
	120	22 x 35	1.01	0.328	610	340	57121E3	17121E3
	120	25 x 30	1.01	0.328	630	350	67121E3	27121E3
	120	30 x 25	1.04	0.328	650	370	77121E3	37121E3
	150	22 x 40	1.18	0.409	490	270	57151E3	17151E3
	150	25 x 35	1.17	0.409	500	280	67151E3	27151E3
	180	25 x 40	1.34	0.49	420	230	57181E3	17181E3
	180	30 x 30	1.31	0.49	440	250	67181E3	27181E3
	180	35 x 25	1.36	0.49	480	290	77181E3	37181E3
	220	25 x 50	1.63	0.598	350	190	57221E3	17221E3
	220	30 x 35	1.5	0.598	370	210	67221E3	27221E3
	220	35 x 30	1.58	0.598	390	230	77221E3	37221E3
	270	30 x 40	1.71	0.733	300	180	57271E3	17271E3
	330	35 x 35	1.91	0.895	270	160	57331E3	17331E3
	390	35 x 40	2.13	1.057	230	140	57391E3	17391E3
	470	35 x 50	2.53	1.273	180	110	57471E3	17471E3
	560	35 x 55	2.78	1.516	160	100	57561E3	17561E3
500	47	22 x 25	0.57	0.145	2800	2060	59479E3	19479E3
	56	25 x 25	0.65	0.172	2360	1740	59569E3	19569E3
	68	22 x 30	0.71	0.208	1940	1430	59689E3	19689E3
	82	22 x 35	0.82	0.25	1600	1180	59829E3	19829E3
	82	25 x 30	0.82	0.25	1610	1190	69829E3	29829E3
	100	22 x 40	0.94	0.304	1320	970	59101E3	19101E3
	120	25 x 35	1.03	0.364	1110	820	59121E3	19121E3
	120	30 x 30	1.07	0.364	1120	830	69121E3	29121E3
	120	35 x 25	1.14	0.364	1150	870	79121E3	39121E3
	150	25 x 45	1.26	0.454	890	650	59151E3	19151E3
	180	30 x 35	1.34	0.544	760	560	59181E3	19181E3
	180	35 x 30	1.42	0.544	770	580	69181E3	29181E3
	220	30 x 40	1.53	0.664	620	470	59221E3	19221E3
	270	30 x 50	1.85	0.814	500	380	59271E3	19271E3
	270	35 x 35	1.74	0.814	530	400	69271E3	29271E3
	330	35 x 45	2.06	0.994	430	320	59331E3	19331E3
	390	35 x 50	2.3	1.174	360	270	59391E3	19391E3
	470	35 x 55	2.55	1.414	310	230	59471E3	19471E3

For technical questions, contact: aluminumcaps2@vishay.com
THIS DOCUMENT IS SUBJECT TO CHANGE WITHOUT NOTICE. THE PRODUCTS DESCRIBED HEREIN AND THIS DOCUMENT ARE SUBJECT TO SPECIFIC DISCLAIMERS, SET FORTH AT www.vishay.com/doc?91000

chanhvinh.com

ADDITIONAL ELECTRICAL DATA		
PARAMETER	**CONDITIONS**	**VALUE**
Voltage		
Surge voltage	≥ 400 V versions	$U_S = 1.1 \times U_R$
Reverse voltage	≤ 1 V	-
Current		
Leakage current	After 5 min at U_R	$I_{L5} \leq 0.01\ C_R \times U_R$
Inductance		
Equivalent series inductance (ESL)	All case sizes	Typ. 19 nH
		Max. 25 nH

RIPPLE CURRENT AND USEFUL LIFE

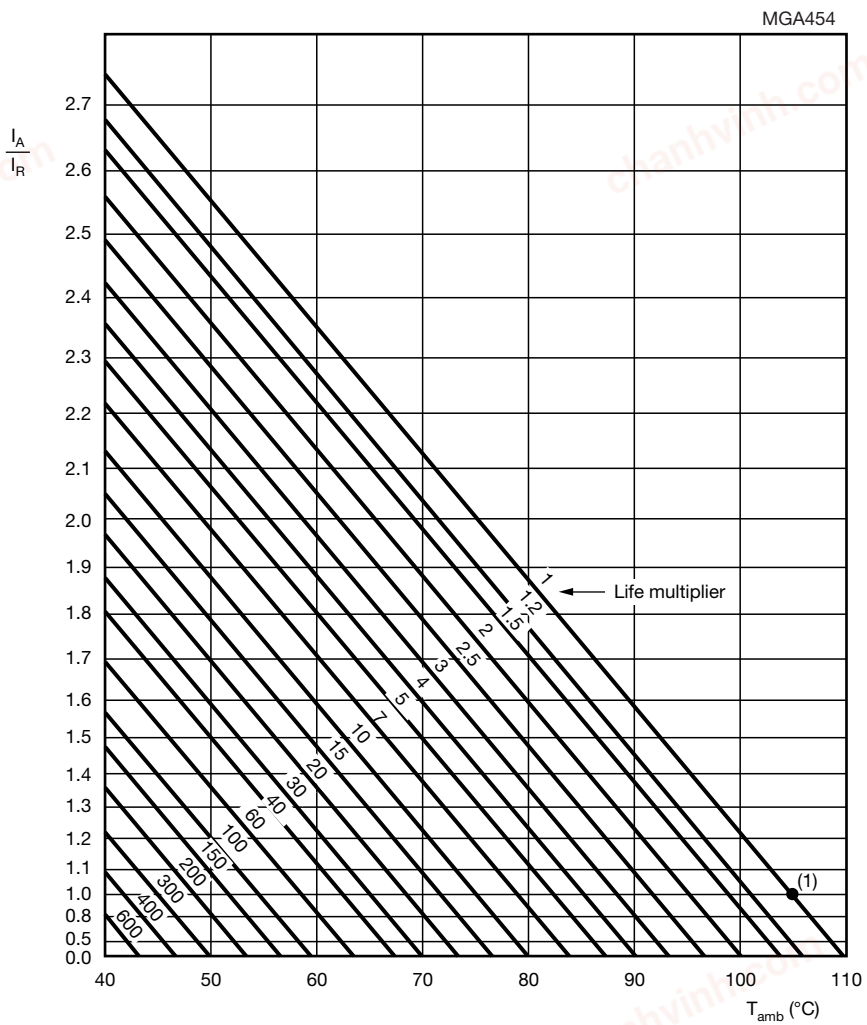

I_A = Actual ripple current at 100 Hz

I_R = Rated ripple current at 100 Hz and 105 °C

(1) Useful life at 105 °C and I_R applied: 5000 h

Fig. 6 - Multiplier of useful life as a function of ambient temperature and ripple current load

For technical questions, contact: aluminumcaps2@vishay.com

THIS DOCUMENT IS SUBJECT TO CHANGE WITHOUT NOTICE. THE PRODUCTS DESCRIBED HEREIN AND THIS DOCUMENT ARE SUBJECT TO SPECIFIC DISCLAIMERS, SET FORTH AT www.vishay.com/doc?91000

chanhvinh.com

Table 3

ENDURANCE TEST DURATION AND USEFUL LIFE	
ENDURANCE AT 105 °C (h)	**USEFUL LIFE AT 105 °C (h)**
2000	5000

Note

- Multiplier of useful life code: MGA454

Table 4

MULTIPLIER OF RIPPLE CURRENT (I_R) AS A FUNCTION OF FREQUENCY					
FREQUENCY (Hz)					
50	**100**	**120**	**200**	**1000**	**≥ 10 000**
I_R MULTIPLIER					
0.8	1.0	1.05	1.2	1.4	1.5

Table 5

TEST PROCEDURES AND REQUIREMENTS			
TEST		**PROCEDURE (quick reference)**	**REQUIREMENTS**
NAME OF TEST	**REFERENCE**		
Endurance	IEC 60384-4 / EN 130300 subclause 4.13	T_{amb} = 105 °C; U_R applied; 2000 h	ΔC/C: ± 15 % ESR ≤ 1.3 x spec. limit I_{L5} ≤ spec. limit
Useful life	CECC 30301 subclause 1.8.1	T_{amb} = 105 °C; U_R and I_R applied; 5000 h	ΔC/C: ± 30 % ESR ≤ 3 x spec. limit I_{L5} ≤ spec. limit total failure percentage: ≤ 3 %
Shelf life (storage at high temperature)	IEC 60384-4 / EN 130300 subclause 4.17	T_{amb} = 105 °C; no voltage applied; 1000 h after test: U_R to be applied for 30 min, 24 h to 48 h before measurement	ΔC/C: ± 15 % ESR ≤ 1.5 x spec. limit I_{L5} ≤ spec. limit

Statements about product lifetime are based on calculations and internal testing. They should only be interpreted as estimations. Also due to external factors, the lifetime in the field application may deviate from the calculated lifetime. In general, nothing stated herein shall be construed as a guarantee of durability.

For technical questions, contact: aluminumcaps2@vishay.com
THIS DOCUMENT IS SUBJECT TO CHANGE WITHOUT NOTICE. THE PRODUCTS DESCRIBED HEREIN AND THIS DOCUMENT ARE SUBJECT TO SPECIFIC DISCLAIMERS, SET FORTH AT www.vishay.com/doc?91000

chanhvinh.com

Disclaimer

ALL PRODUCT, PRODUCT SPECIFICATIONS AND DATA ARE SUBJECT TO CHANGE WITHOUT NOTICE TO IMPROVE RELIABILITY, FUNCTION OR DESIGN OR OTHERWISE.

Vishay Intertechnology, Inc., its affiliates, agents, and employees, and all persons acting on its or their behalf (collectively, “Vishay”), disclaim any and all liability for any errors, inaccuracies or incompleteness contained in any datasheet or in any other disclosure relating to any product.

Vishay makes no warranty, representation or guarantee regarding the suitability of the products for any particular purpose or the continuing production of any product. To the maximum extent permitted by applicable law, Vishay disclaims (i) any and all liability arising out of the application or use of any product, (ii) any and all liability, including without limitation special, consequential or incidental damages, and (iii) any and all implied warranties, including warranties of fitness for particular purpose, non-infringement and merchantability.

Statements regarding the suitability of products for certain types of applications are based on Vishay’s knowledge of typical requirements that are often placed on Vishay products in generic applications. Such statements are not binding statements about the suitability of products for a particular application. It is the customer’s responsibility to validate that a particular product with the properties described in the product specification is suitable for use in a particular application. Parameters provided in datasheets and / or specifications may vary in different applications and performance may vary over time. All operating parameters, including typical parameters, must be validated for each customer application by the customer’s technical experts. Product specifications do not expand or otherwise modify Vishay’s terms and conditions of purchase, including but not limited to the warranty expressed therein.

Except as expressly indicated in writing, Vishay products are not designed for use in medical, life-saving, or life-sustaining applications or for any other application in which the failure of the Vishay product could result in personal injury or death. Customers using or selling Vishay products not expressly indicated for use in such applications do so at their own risk. Please contact authorized Vishay personnel to obtain written terms and conditions regarding products designed for such applications.

No license, express or implied, by estoppel or otherwise, to any intellectual property rights is granted by this document or by any conduct of Vishay. Product names and markings noted herein may be trademarks of their respective owners.

© 2019 VISHAY INTERTECHNOLOGY, INC. ALL RIGHTS RESERVED