chanhvinh.com

Aluminum Electrolytic Capacitors
Power Ultra Long Life Snap-In



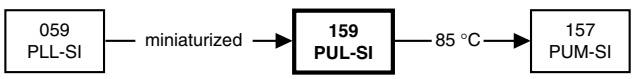

Fig. 1

FEATURES

- Useful life: 5000 h at 105 °C
- Available up to 500 V
- Polarized aluminum electrolytic capacitors, non-solid electrolyte
- Large types, very small dimensions, cylindrical aluminum case, insulated with a blue sleeve
- Low ESR, high ripple current capability
- Keyed polarity snap-in version available
- High reliability
- Material categorization: for definitions of compliance please see www.vishay.com/doc?99912

Pb-free
RoHS COMPLIANT

APPLICATIONS

- Solar PV inverters
- General purpose, industrial and audio / video systems
- Smoothing and filtering
- Standard and switched mode power supplies
- Energy storage in pulse systems

MARKING

The capacitors are marked (where possible) with the following information:

- Rated capacitance (in µF)
- Tolerance code on rated capacitance, code letter in accordance with IEC 60062 (M for ± 20 %)
- Rated voltage (in V)
- Date code (YYMM or in 2 digits according to IEC 60062)
- Name of manufacturer
- Code for factory of origin
- "-" sign to identify the negative terminal, visible from the top and side of the capacitor
- Code number, last 8 digits 159 xxxxx
- Climatic category in accordance with IEC 60068

QUICK REFERENCE DATA

DESCRIPTION	VALUE
Nominal case size (Ø D x L in mm)	22 x 25 to 35 x 60
Rated capacitance range (E6 / E12 series), C_R	56 µF to 1800 µF
Tolerance on C_R	± 20 %
Rated voltage range, U_R	200 V to 500 V
Category temperature range	-25 °C to +105 °C
Endurance test at 105 °C	2000 h
Load life at 105 °C	2000 h
Useful life at 105 °C	5000 h
Useful life at 40 °C and 1.6 x I_R applied	500 000 h
Shelf life at 0 V, 105 °C	1000 h
Based on sectional specification	IEC 60384-4 / EN 130300
Climatic category IEC 60068	25 / 105 / 56

SELECTION CHART FOR C_R, U_R, AND RELEVANT NOMINAL CASE SIZES (Ø D x L in mm)

C_R (µF)	U_R (V)				
	200	250	400	450	500
56	-	-	-	22 x 25	22 x 30
68	-	-	22 x 25	22 x 30	22 x 35
	-	-	-	25 x 25	25 x 30
82	-	-	22 x 30	22 x 35	22 x 35
	-	-	25 x 25	-	25 x 30
100	-	-	22 x 35	22 x 40	22 x 40
	-	-	25 x 30	25 x 30	25 x 35
	-	-	-	30 x 25	-
120	-	-	22 x 35	-	25 x 40
	-	-	25 x 30	25 x 35	30 x 30
	-	-	30 x 25	-	-
150	-	-	22 x 40	25 x 40	25 x 45
	-	-	25 x 35	30 x 30	30 x 35
	-	-	30 x 30	35 x 25	-
180	-	-	25 x 40	25 x 45	25 x 50
	-	-	30 x 30	30 x 35	30 x 40
	-	-	35 x 25	-	35 x 30
220	-	22 x 30	25 x 45	30 x 40	30 x 45
	-	25 x 25	30 x 35	35 x 30	35 x 35
	-	-	35 x 30	-	-

For technical questions, contact: aluminumcaps2@vishay.com

THIS DOCUMENT IS SUBJECT TO CHANGE WITHOUT NOTICE. THE PRODUCTS DESCRIBED HEREIN AND THIS DOCUMENT ARE SUBJECT TO SPECIFIC DISCLAIMERS, SET FORTH AT www.vishay.com/doc?91000

chanhvinh.com

SELECTION CHART FOR C_R, U_R, AND RELEVANT NOMINAL CASE SIZES (Ø D x L in mm)					
C_R (µF)	U_R (V)				
	200	250	400	450	500
270	-	22 x 35	25 x 50	30 x 45	30 x 50
	-	25 x 30	30 x 40	35 x 35	35 x 40
	-	30 x 25	35 x 30	-	-
330	22 x 30	22 x 40	30 x 45	30 x 50	35 x 45
	-	25 x 30	35 x 35	35 x 40	-
	-	30 x 25	-	-	-
390	22 x 35	25 x 35	30 x 50	35 x 45	35 x 55
	25 x 30	30 x 30	35 x 40	-	-
470	22 x 40	25 x 40	35 x 45	35 x 50	35 x 60
	30 x 25	30 x 30	-	35 x 40	-
	-	35 x 25	-	-	-
560	-	25 x 45	-	35 x 60	-
	25 x 35	30 x 35	-	-	-
	30 x 30	35 x 30	-	-	-
680	25 x 45	30 x 40	35 x 60	-	-
	30 x 30	35 x 35	-	-	-
	35 x 25	-	-	-	-
820	25 x 50	30 x 45	-	-	-
	30 x 35	35 x 35	-	-	-
	35 x 30	35 x 40	-	-	-
1000	30 x 45	35 x 40	-	-	-
	35 x 35	35 x 45	-	-	-
1200	30 x 50	35 x 45	-	-	-
	35 x 35	35 x 50	-	-	-
1500	35 x 45	-	-	-	-
1800	35 x 50	-	-	-	-

DIMENSIONS in millimeters AND AVAILABLE FORMS

TWO TERMINAL SNAP-IN

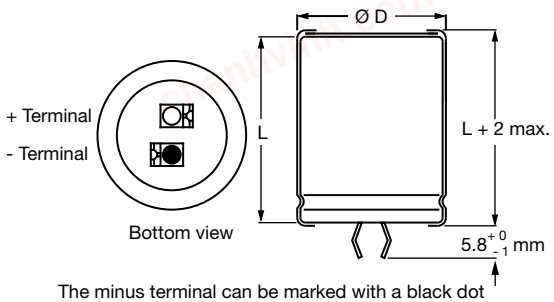

The minus terminal can be marked with a black dot or with an imprinted "-" sign.

Fig. 2 - Two terminal snap-in

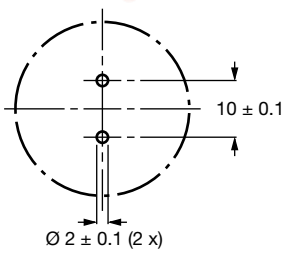

Fig. 3 - Mounting hole diagram

THREE TERMINAL SNAP-IN

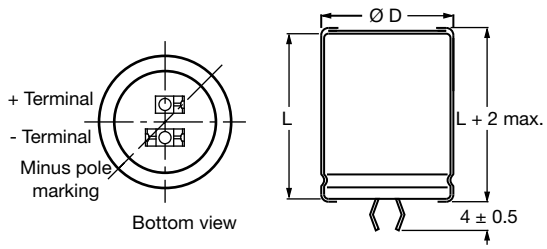

The negative terminal has **TWO** pins which are **BOTH** electrically connected

Fig. 4 - Three terminal snap-in

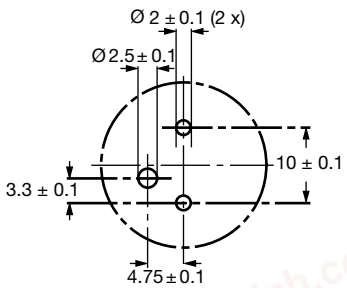

The 10 mm spacing of the 2 pin snap-in is used as the base layout and a third hole is added. The third hole is closer to the negative primary hole so that polarization is always maintained, together with added mechanical stability.

Fig. 5 - Mounting hole diagram

For technical questions, contact: aluminumcaps2@vishay.com
THIS DOCUMENT IS SUBJECT TO CHANGE WITHOUT NOTICE. THE PRODUCTS DESCRIBED HEREIN AND THIS DOCUMENT ARE SUBJECT TO SPECIFIC DISCLAIMERS, SET FORTH AT www.vishay.com/doc?91000

chanhvinh.com

Table 1

DIMENSIONS in millimeters, MASS AND PACKAGING QUANTITIES					
NOMINAL CASE SIZE Ø D x L	Ø $D_{max.}$	$L_{max.}$	MASS (g)	PACKAGING QUANTITIES (units per box)	CARDBOARD BOX DIMENSIONS L x W x H
22 x 25	23	27	≈ 12	100	260 x 250 x 39
22 x 30	23	32	≈ 16	100	260 x 250 x 44
22 x 35	23	37	≈ 20	100	260 x 250 x 49
22 x 40	23	42	≈ 23	100	260 x 250 x 54
25 x 25	26	27	≈ 20	100	290 x 280 x 39
25 x 30	26	32	≈ 22	100	290 x 280 x 44
25 x 35	26	37	≈ 24	100	290 x 280 x 49
25 x 40	26	42	≈ 27	100	290 x 280 x 54
25 x 45	26	47	≈ 32	100	290 x 280 x 59
25 x 50	26	52	≈ 38	100	290 x 280 x 64
30 x 25	31	27	≈ 25	100	340 x 330 x 39
30 x 30	31	32	≈ 30	100	340 x 330 x 44
30 x 35	31	37	≈ 35	100	340 x 330 x 49
30 x 40	31	42	≈ 40	100	340 x 330 x 54
30 x 45	31	47	≈ 45	100	340 x 330 x 59
30 x 50	31	52	≈ 50	100	340 x 330 x 64
35 x 25	36	27	≈ 33	50	390 x 198 x 39
35 x 30	36	32	≈ 40	50	390 x 198 x 44
35 x 35	36	37	≈ 48	50	390 x 198 x 49
35 x 40	36	42	≈ 55	50	390 x 198 x 54
35 x 45	36	47	≈ 63	50	390 x 198 x 59
35 x 50	36	52	≈ 72	50	390 x 198 x 64
35 x 55	36	57	≈ 80	50	390 x 198 x 69
35 x 60	36	62	≈ 84	50	390 x 198 x 74

ELECTRICAL DATA	
SYMBOL	DESCRIPTION
C_R	Rated capacitance at 100 Hz
I_R	Rated RMS ripple current at 120 Hz, 105 °C
I_{L5}	Max. leakage current after 5 min at U_R
ESR	Typ. / max. equivalent series resistance at 100 Hz (1)
Z	Typ. / max. impedance at 10 kHz

Notes

- Unless otherwise specified, all electrical values in Table 2 apply at T_{amb} = 20 °C, P = 86 kPa to 106 kPa, RH = 45 % to 75 %

(1) ESR at 120 Hz is approximately 0.95 x ESR 100 Hz

ORDERING EXAMPLE

Electrolytic capacitor 159 series

1000 µF / 200 V; ± 20 %

Nominal case size: Ø 30 mm x 45 mm

2-terminal snap-in:

Ordering code: MAL215942102E3
Former 12NC: 222215942102

3-terminal snap-in:

Ordering code: MAL215922102E3
Former 12NC: 222215922102

For technical questions, contact: aluminumcaps2@vishay.com
THIS DOCUMENT IS SUBJECT TO CHANGE WITHOUT NOTICE. THE PRODUCTS DESCRIBED HEREIN AND THIS DOCUMENT ARE SUBJECT TO SPECIFIC DISCLAIMERS, SET FORTH AT www.vishay.com/doc?91000

chanhvinh.com

Table 2

ELECTRICAL DATA AND ORDERING INFORMATION										
U_R (V)	C_R 100 Hz (µF)	NOMINAL CASE SIZE Ø D x L (mm)	I_R 120 Hz 105 °C (A)	I_{L5} 5 min (mA)	TYP. ESR 100 Hz [1] (mΩ)	MAX. ESR 100 Hz [1] (mΩ)	TYP. Z 10 kHz (mΩ)	MAX. Z 10 kHz (mΩ)	ORDERING CODE MAL2159.....	
									2-TERM.	3-TERM.
200	330	22 x 30	1.08	0.66	450	730	300	500	52331E3	72331E3
	390	22 x 35	1.23	0.78	380	610	280	470	42391E3	22391E3
	390	25 x 30	1.23	0.78	380	610	280	470	52391E3	72391E3
	470	22 x 40	1.37	0.94	300	505	240	400	32471E3	12471E3
	470	30 x 25	1.27	0.94	300	505	240	400	52471E3	72471E3
	560	25 x 35	1.50	1.12	260	425	235	390	42561E3	22561E3
	560	30 x 30	1.52	1.12	260	425	235	390	52561E3	72561E3
	680	25 x 45	1.82	1.36	210	350	205	340	42681E3	22681E3
	680	30 x 30	1.59	1.36	210	350	205	340	52681E3	72681E3
	680	35 x 25	1.44	1.36	210	350	205	340	62681E3	82681E3
	820	25 x 50	2.04	1.64	180	290	145	240	32821E3	12821E3
	820	30 x 35	1.83	1.64	180	290	145	240	42821E3	22821E3
	820	35 x 30	1.77	1.64	180	290	145	240	52821E3	72821E3
	1000	30 x 45	2.23	2.00	150	235	135	225	42102E3	22102E3
	1000	35 x 35	2.04	2.00	150	235	135	225	52102E3	72102E3
	1200	30 x 50	2.47	2.40	130	210	115	190	42122E3	22122E3
	1200	35 x 35	2.07	2.40	130	210	115	190	52122E3	72122E3
	1500	35 x 45	2.56	3.00	100	170	95	155	52152E3	72152E3
	1800	35 x 50	2.80	3.60	90	150	80	130	52182E3	72182E3
250	220	22 x 30	1.00	0.55	540	1080	420	700	43221E3	23221E3
	220	25 x 25	1.00	0.55	540	1080	420	700	53221E3	73221E3
	270	22 x 35	1.07	0.67	440	880	335	560	43271E3	23271E3
	270	25 x 30	1.08	0.67	440	880	335	560	53271E3	73271E3
	270	30 x 25	1.08	0.67	440	880	335	560	63271E3	83271E3
	330	22 x 40	1.20	0.82	360	720	255	430	33331E3	13331E3
	330	25 x 30	1.21	0.82	360	720	255	430	43331E3	23331E3
	330	30 x 25	1.19	0.82	360	720	255	430	53331E3	73331E3
	390	25 x 35	1.39	0.97	330	610	245	410	43391E3	23391E3
	390	30 x 30	1.41	0.97	330	610	245	410	53391E3	73391E3
	470	25 x 40	1.58	1.17	270	505	240	400	33471E3	13471E3
	470	30 x 30	1.57	1.17	270	505	240	400	43471E3	23471E3
	470	35 x 25	1.37	1.17	270	505	240	400	53471E3	73471E3
	560	25 x 45	1.78	1.40	230	425	185	310	43561E3	23561E3
	560	30 x 35	1.71	1.40	230	425	185	310	53561E3	73561E3
	560	35 x 30	1.67	1.40	230	425	185	310	63561E3	83561E3
	680	30 x 40	1.93	1.70	210	350	155	260	43681E3	23681E3
	680	35 x 35	1.92	1.70	210	350	155	260	53681E3	73681E3
	820	30 x 45	2.16	2.05	180	290	125	210	43821E3	23821E3
	820	35 x 35	1.97	2.05	180	290	125	210	53821E3	73821E3
	820	35 x 40	2.16	2.05	180	290	125	210	63821E3	83821E3
	1000	35 x 40	2.22	2.50	140	235	105	180	53102E3	73102E3
	1000	35 x 45	2.41	2.50	140	235	105	180	63102E3	83102E3
	1200	35 x 45	2.46	3.00	130	200	95	160	43122E3	23122E3
	1200	35 x 50	2.65	3.00	130	200	95	160	53122E3	73122E3

Note

[1] ESR at 120 Hz is approximately 0.95 x ESR 100 Hz

For technical questions, contact: aluminumcaps2@vishay.com
THIS DOCUMENT IS SUBJECT TO CHANGE WITHOUT NOTICE. THE PRODUCTS DESCRIBED HEREIN AND THIS DOCUMENT ARE SUBJECT TO SPECIFIC DISCLAIMERS, SET FORTH AT www.vishay.com/doc?91000

chanhvinh.com

ELECTRICAL DATA AND ORDERING INFORMATION

U_R (V)	C_R 100 Hz (µF)	NOMINAL CASE SIZE Ø D x L (mm)	I_R 120 Hz 105 °C (A)	I_{L5} 5 min (mA)	TYP. ESR 100 Hz (1) (mΩ)	MAX. ESR 100 Hz (1) (mΩ)	TYP. Z 10 kHz (mΩ)	MAX. Z 10 kHz (mΩ)	ORDERING CODE MAL2159.....	
									2-TERM.	3-TERM.
	68	22 x 25	0.51	0.27	1600	3200	1170	1950	56689E3	76689E3
	82	22 x 30	0.60	0.33	1200	2400	910	1520	46829E3	26829E3
	82	25 x 25	0.60	0.33	1200	2400	910	1520	56829E3	76829E3
	100	22 x 35	0.69	0.40	990	1980	740	1240	46101E3	26101E3
	100	25 x 30	0.70	0.40	990	1980	740	1240	56101E3	76101E3
	120	22 x 35	0.76	0.48	800	1600	660	1100	46121E3	26121E3
	120	25 x 30	0.76	0.48	800	1600	660	1100	56121E3	76121E3
	120	30 x 25	0.77	0.48	800	1600	660	1100	66121E3	86121E3
	150	22 x 40	0.86	0.60	700	1400	510	860	36151E3	16151E3
	150	25 x 35	0.89	0.60	700	1400	510	860	46151E3	26151E3
	150	30 x 30	0.92	0.60	700	1400	510	860	56151E3	76151E3
	180	25 x 40	1.01	0.72	590	1170	420	700	36181E3	16181E3
	180	30 x 30	0.99	0.72	590	1170	420	700	46181E3	26181E3
400	180	35 x 25	0.96	0.72	590	1170	420	700	56181E3	76181E3
	220	25 x 45	1.15	0.88	470	940	350	590	46221E3	26221E3
	220	30 x 35	1.15	0.88	470	940	350	590	56221E3	76221E3
	220	35 x 30	1.14	0.88	470	940	350	590	66221E3	86221E3
	270	25 x 50	1.31	1.08	380	760	330	550	46271E3	26271E3
	270	30 x 40	1.30	1.08	380	760	330	550	56271E3	76271E3
	270	35 x 30	1.21	1.08	380	760	330	550	66271E3	86271E3
	330	30 x 45	1.47	1.32	320	640	270	450	56331E3	76331E3
	330	35 x 35	1.40	1.32	320	640	270	450	66331E3	86331E3
	390	30 x 50	1.63	1.56	270	540	240	410	46391E3	26391E3
	390	35 x 40	1.57	1.56	270	540	240	410	56391E3	76391E3
	470	35 x 45	1.72	1.88	230	450	200	330	56471E3	76471E3
	560	35 x 50	1.84	2.24	210	420	170	280	56561E3	76561E3
	680	35 x 60	2.24	2.72	180	350	130	230	56681E3	76681E3
	56	22 x 25	0.48	0.25	1600	3200	1120	1880	57569E3	77569E3
	68	22 x 30	0.56	0.30	1200	2400	910	1530	47689E3	27689E3
	68	25 x 25	0.56	0.30	1200	2400	910	1530	57689E3	77689E3
	82	22 x 35	0.64	0.36	1100	2200	770	1290	57829E3	77829E3
	100	22 x 40	0.74	0.45	900	1800	630	1050	37101E3	17101E3
	100	25 x 30	0.71	0.45	900	1800	630	1050	47101E3	27101E3
	100	30 x 25	0.73	0.45	900	1800	630	1050	57101E3	77101E3
	120	25 x 35	0.82	0.54	750	1500	530	885	57121E3	77121E3
	150	25 x 40	0.95	0.67	600	1200	420	705	47151E3	27151E3
	150	30 x 30	0.93	0.67	600	1200	420	705	57151E3	77151E3
	150	35 x 25	0.91	0.67	600	1200	420	705	67151E3	87151E3
450	180	25 x 45	1.07	0.81	500	1000	360	605	47181E3	27181E3
	180	30 x 35	1.06	0.81	500	1000	360	605	57181E3	77181E3
	220	30 x 40	1.21	0.99	370	740	310	525	47221E3	27221E3
	220	35 x 30	1.14	0.99	370	740	310	525	57221E3	77221E3
	270	30 x 45	1.37	1.21	350	700	270	450	47271E3	27271E3
	270	35 x 35	1.32	1.21	350	700	270	450	57271E3	77271E3
	330	30 x 50	1.54	1.48	300	600	230	390	47331E3	27331E3
	330	35 x 40	1.49	1.48	300	600	230	390	57331E3	77331E3
	390	35 x 45	1.61	1.75	250	500	200	340	57391E3	77391E3
	470	35 x 40	1.90	1.50	210	300	115	190	90103E3D	-
	470	35 x 50	1.72	2.11	210	420	170	290	57471E3	77471E3
	560	35 x 60	2.11	2.52	190	380	140	240	57561E3	77561E3

Note

(1) ESR at 120 Hz is approximately 0.95 x ESR 100 Hz

For technical questions, contact: aluminumcaps2@vishay.com
THIS DOCUMENT IS SUBJECT TO CHANGE WITHOUT NOTICE. THE PRODUCTS DESCRIBED HEREIN AND THIS DOCUMENT ARE SUBJECT TO SPECIFIC DISCLAIMERS, SET FORTH AT www.vishay.com/doc?91000

chanhvinh.com

ELECTRICAL DATA AND ORDERING INFORMATION

U_R (V)	C_R 100 Hz (µF)	NOMINAL CASE SIZE Ø D x L (mm)	I_R 120 Hz 105 °C (A)	I_{L5} 5 min (mA)	TYP. ESR 100 Hz (1) (mΩ)	MAX. ESR 100 Hz (1) (mΩ)	TYP. Z 10 kHz (mΩ)	MAX. Z 10 kHz (mΩ)	ORDERING CODE MAL2159.....	
									2-TERM.	3-TERM.
	56	22 x 30	0.56	0.28	1730	2310	1280	1700	19569E3	89569E3
	68	22 x 35	0.63	0.34	1430	1900	1050	1400	19689E3	89689E3
	68	25 x 30	0.64	0.34	1430	1910	1060	1410	29689E3	69689E3
	82	22 x 35	0.69	0.41	1190	1580	880	1170	19829E3	89829E3
	82	25 x 30	0.69	0.41	1190	1590	890	1180	29829E3	69829E3
	100	22 x 40	0.80	0.50	980	1300	720	960	19101E3	89101E3
	100	25 x 35	0.80	0.50	980	1310	720	960	29101E3	69101E3
	120	25 x 40	0.92	0.60	820	1090	610	810	29121E3	89121E3
	120	30 x 30	0.91	0.60	830	1110	620	830	19121E3	69121E3
	150	25 x 45	1.07	0.75	650	870	490	650	19151E3	89151E3
500	150	30 x 35	1.05	0.75	670	890	500	660	29151E3	39151E3
	180	25 x 50	1.23	0.90	550	730	410	540	29181E3	89181E3
	180	30 x 40	1.19	0.90	560	740	410	550	19181E3	69181E3
	180	35 x 30	1.20	0.90	580	770	440	590	39181E3	49181E3
	220	30 x 45	1.37	1.10	460	610	340	450	29221E3	89221E3
	220	35 x 35	1.37	1.10	470	630	360	480	19221E3	69221E3
	270	30 x 50	1.57	1.35	380	500	280	370	19271E3	89271E3
	270	35 x 40	1.55	1.35	390	520	290	390	29271E3	69271E3
	330	35 x 45	1.74	1.65	320	430	240	320	19331E3	89331E3
	390	35 x 55	2.02	1.95	270	360	200	270	19391E3	89391E3
	470	35 x 60	2.24	2.35	230	300	170	230	19471E3	89471E3

Note

(1) ESR at 120 Hz is approximately 0.95 x ESR 100 Hz

ADDITIONAL ELECTRICAL DATA

PARAMETER	CONDITIONS	VALUE
Voltage		
Surge voltage	≥ 400 V versions	$U_s = 1.1 \times U_R$
	≤ 250 V versions	$U_s = 1.15 \times U_R$
Reverse voltage		≤ 1 V
Current		
Leakage current	After 5 min at U_R	$I_{L5} \leq 0.01\ C_R \times U_R$
Inductance		
Equivalent series inductance (ESL)	All case sizes	Typ. 19 nH
		Max. 25 nH

For technical questions, contact: aluminumcaps2@vishay.com
THIS DOCUMENT IS SUBJECT TO CHANGE WITHOUT NOTICE. THE PRODUCTS DESCRIBED HEREIN AND THIS DOCUMENT ARE SUBJECT TO SPECIFIC DISCLAIMERS, SET FORTH AT www.vishay.com/doc?91000

chanhvinh.com

RIPPLE CURRENT AND USEFUL LIFE

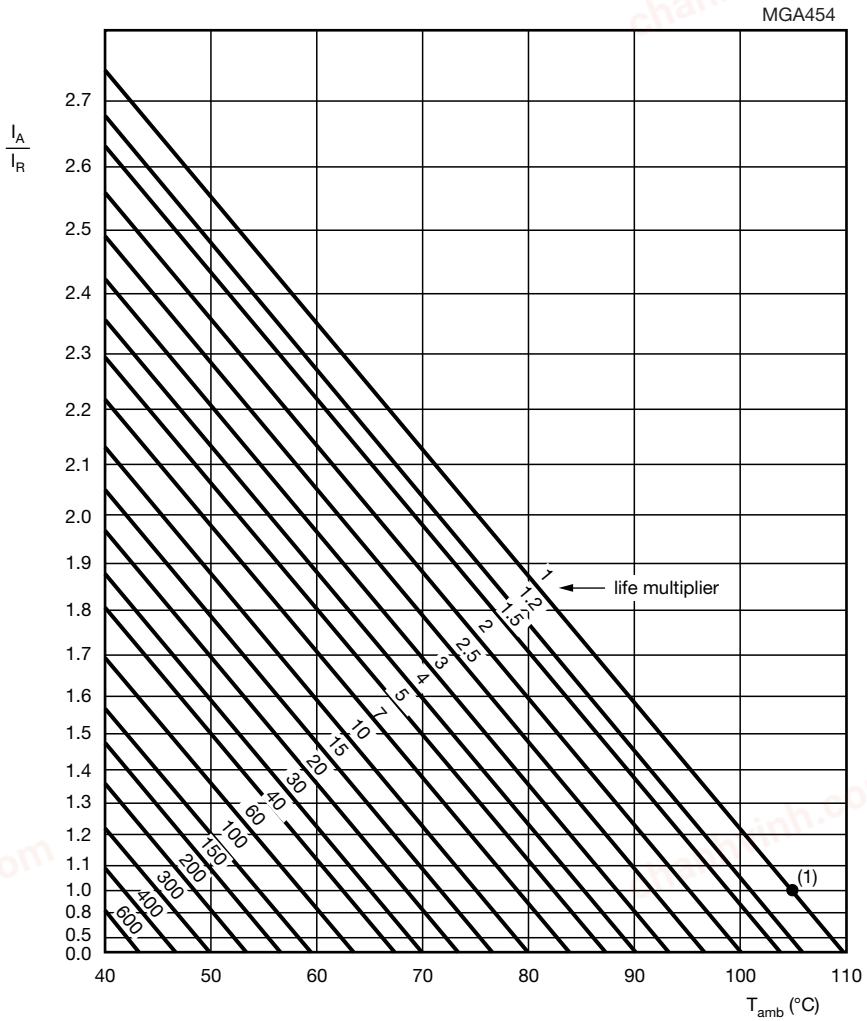

I_A = Actual ripple current at 120 Hz
I_R = Rated ripple current at 120 Hz and 105 °C
(1) Useful life at 105 °C and I_R applied: 5000 h

Fig. 6 - Multiplier of useful life as a function of ambient temperature and ripple current load

Table 3

ENDURANCE TEST DURATION AND USEFUL LIFE	
ENDURANCE AT 105 °C (h)	USEFUL LIFE AT 105 °C (h)
2000	5000

Note

- Multiplier of useful life code: MGA454

Table 4

MULTIPLIER OF RIPPLE CURRENT (I_R) AS A FUNCTION OF FREQUENCY					
FREQUENCY (Hz)					
50	100	120	200	1000	≥ 10 000
I_R MULTIPLIER					
0.90	0.95	1.00	1.15	1.30	1.40

For technical questions, contact: aluminumcaps2@vishay.com
THIS DOCUMENT IS SUBJECT TO CHANGE WITHOUT NOTICE. THE PRODUCTS DESCRIBED HEREIN AND THIS DOCUMENT ARE SUBJECT TO SPECIFIC DISCLAIMERS, SET FORTH AT www.vishay.com/doc?91000

chanhvinh.com

Table 5

TEST PROCEDURES AND REQUIREMENTS			
TEST		PROCEDURE (quick reference)	REQUIREMENTS
NAME OF TEST	REFERENCE		
Endurance	IEC 60384-4 / EN130300 subclause 4.13	T_{amb} = 105 °C; U_R applied; 2000 h	ΔC/C: ± 15 % ESR ≤ 1.3 x spec. limit I_{L5} ≤ spec. limit
Load life		T_{amb} = 105 °C; U_R and I_R applied; 2000 h	ΔC/C: ± 20 % ESR ≤ 2 x spec. limit I_{L5} ≤ spec. limit
Useful life	CECC 30301 subclause 1.8.1	T_{amb} = 105 °C; U_R and I_R applied; 5000 h	ΔC/C: ± 30 % ESR ≤ 3 x spec. limit I_{L5} ≤ spec. limit total failure percentage: ≤ 3 %
Shelf life (storage at high temperature)	IEC 60384-4 / EN130300 subclause 4.17	T_{amb} = 105 °C; no voltage applied; 1000 h after test: U_R to be applied for 30 min, 24 h to 48 h before measurement	ΔC/C: ± 15 % ESR ≤ 1.5 x spec. limit I_{L5} ≤ spec. limit

Statements about product lifetime are based on calculations and internal testing. They should only be interpreted as estimations. Also due to external factors, the lifetime in the field application may deviate from the calculated lifetime. In general, nothing stated herein shall be construed as a guarantee of durability.

For technical questions, contact: aluminumcaps2@vishay.com
THIS DOCUMENT IS SUBJECT TO CHANGE WITHOUT NOTICE. THE PRODUCTS DESCRIBED HEREIN AND THIS DOCUMENT ARE SUBJECT TO SPECIFIC DISCLAIMERS, SET FORTH AT www.vishay.com/doc?91000

chanhvinh.com

Disclaimer

ALL PRODUCT, PRODUCT SPECIFICATIONS AND DATA ARE SUBJECT TO CHANGE WITHOUT NOTICE TO IMPROVE RELIABILITY, FUNCTION OR DESIGN OR OTHERWISE.

Vishay Intertechnology, Inc., its affiliates, agents, and employees, and all persons acting on its or their behalf (collectively, “Vishay”), disclaim any and all liability for any errors, inaccuracies or incompleteness contained in any datasheet or in any other disclosure relating to any product.

Vishay makes no warranty, representation or guarantee regarding the suitability of the products for any particular purpose or the continuing production of any product. To the maximum extent permitted by applicable law, Vishay disclaims (i) any and all liability arising out of the application or use of any product, (ii) any and all liability, including without limitation special, consequential or incidental damages, and (iii) any and all implied warranties, including warranties of fitness for particular purpose, non-infringement and merchantability.

Statements regarding the suitability of products for certain types of applications are based on Vishay's knowledge of typical requirements that are often placed on Vishay products in generic applications. Such statements are not binding statements about the suitability of products for a particular application. It is the customer's responsibility to validate that a particular product with the properties described in the product specification is suitable for use in a particular application. Parameters provided in datasheets and / or specifications may vary in different applications and performance may vary over time. All operating parameters, including typical parameters, must be validated for each customer application by the customer's technical experts. Product specifications do not expand or otherwise modify Vishay's terms and conditions of purchase, including but not limited to the warranty expressed therein.

Hyperlinks included in this datasheet may direct users to third-party websites. These links are provided as a convenience and for informational purposes only. Inclusion of these hyperlinks does not constitute an endorsement or an approval by Vishay of any of the products, services or opinions of the corporation, organization or individual associated with the third-party website. Vishay disclaims any and all liability and bears no responsibility for the accuracy, legality or content of the third-party website or for that of subsequent links.

Except as expressly indicated in writing, Vishay products are not designed for use in medical, life-saving, or life-sustaining applications or for any other application in which the failure of the Vishay product could result in personal injury or death. Customers using or selling Vishay products not expressly indicated for use in such applications do so at their own risk. Please contact authorized Vishay personnel to obtain written terms and conditions regarding products designed for such applications.

No license, express or implied, by estoppel or otherwise, to any intellectual property rights is granted by this document or by any conduct of Vishay. Product names and markings noted herein may be trademarks of their respective owners.

© 2023 VISHAY INTERTECHNOLOGY, INC. ALL RIGHTS RESERVED